SHARP SERVICE MANUAL

CODE: 00ZARC260MA2E

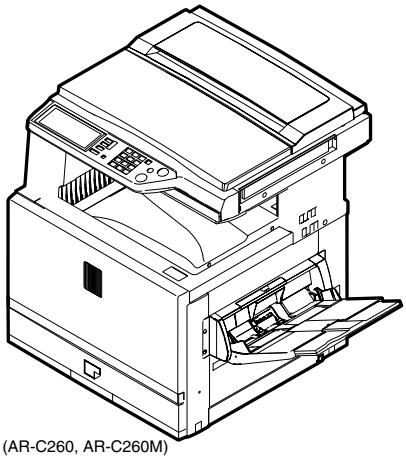

(AR-C260, AR-C260M)

DIGITAL FULL COLOR COPIER/PRINTER/ MULTIFUNCTIONAL SYSTEM

MODEL AR-C260 AR-C260M

CONTENTS

[1] OUTLINE 1-1
[2] CONFIGURATION 2-1
[3] SPECIFICATIONS 3-1
[4] CONSUMABLE PARTS 4-1
[5] UNPACKING AND INSTALLATION 5-1
[6] EXTERNAL VIEW AND INTERNAL STRUCTURE 6-1
[7] DESCRIPTIONS OF EACH SECTION 7-1
[8] SETTING AND ADJUSTMENTS 8-1
[9] SIMULATION 9-1
[10] MAINTENANCE LIST 10-1
[11] TROUBLESHOOTING 11-1
[12] ROM VERSION UP 12-1
[13] ELECTRIC DIAGRAM 13-1
[14] OTHERS 14-1

Parts marked with "⚠" are important for maintaining the safety of the set. Be sure to replace these parts with specified ones for maintaining the safety and performance of the set.

SHARP CORPORATION

This document has been published to be used for after sales service only.
The contents are subject to change without notice.

CONTENTS

[1] OUTLINE
1. Product features . . . 1-1
2. Newly employed technology . . . 1-1

[2] CONFIGURATION
1. Product Line and options . . . 2-1
   A. Line of machines . . . 2-1
   B. Line of options . . . 2-1
   C. Combination of options . . . 2-2
2. Block diagram . . . 2-2

[3] SPECIFICATIONS
1. Basic specifications . . . 3-1
   A. Base engine . . . 3-1
   B. Paper feed unit . . . 3-2
   C. Paper exit unit . . . 3-2
   D. Scanner section . . . 3-2
2. Functional specifications . . . 3-3
   A. Specifications of copy functions . . . 3-3
3. Environment conditions . . . 3-5
   A. Operating environment conditions . . . 3-5
   B. Storage environment conditions . . . 3-5
   C. Transit environment conditions . . . 3-6
   D. Standard temperature and humidity . . . 3-6

[4] CONSUMABLE PARTS
1. Supply system table . . . 4-1
2. Consumables (kit, unit) . . . 4-2
3. Photoconductor, developer, toner . . . 4-3

[5] UNPACKING AND INSTALLATION
1. Installing (use) conditions . . . 5-1
2. Transit and delivery . . . 5-2
3. Unpacking . . . 5-2
4. Lock release . . . 5-3
5. Fusing heat roller pressing (F/R) . . . 5-4
6. Black drum cartridge insertion . . . 5-5
7. Paper exit tray installation . . . 5-5
8. Toner cartridges installation . . . 5-5
9. AC cord connection . . . 5-6
10. Machine power ON . . . 5-6
11. Specifications setup . . . 5-6
12. Image quality check . . . 5-6
13. Function and operation check . . . 5-6
14. Setup and adjustment data recording . . . 5-7
15. Necessary works before moving the machine . . . 5-7

[6] EXTERNAL VIEW AND INTERNAL STRUCTURE
1. Name and function of each section . . . 6-1
   A. External view . . . 6-1
   B. Internal structure . . . 6-2
   C. Operation panel . . . 6-3
   D. Job status display . . . 6-4
   E. Cross section . . . 6-5
   F. Motors, clutches, solenoids, fans . . . 6-7
   G. Sensors, switches and heaters . . . 6-8
   H. PWB 1 . . . 6-9
   H. PWB 2 . . . 6-10

[7] DESCRIPTIONS OF EACH SECTION
1. Fusing section . . . 7-1
   A. Operational descriptions . . . 7-1
   B. Disassembly/Assembly/Maintenance . . . 7-3
2. Transfer section . . . 7-7
   A. Operational descriptions . . . 7-7
   B. Disassembly/assembly/maintenance . . . 7-10
3. Process (image forming) section . . . 7-15
   A. Operational descriptions . . . 7-15
   B. Disassembly/assembly/maintenance . . . 7-19
4. Optical section (Scanner section) . . . 7-22
   A. Operational descriptions . . . 7-22
   B. Disassembly/assembly/maintenance . . . 7-25
5. Paper feed, paper transport, and paper exit sections . . . 7-27
   A. Operational descriptions . . . 7-27
   B. Disassembly/assembly/maintenance . . . 7-33
6. Operation panel . . . 7-40
   A. Operational descriptions . . . 7-40
   B. Disassembly/assembly/maintenance . . . 7-41
7. External fitting . . . 7-42
   A. Disassembly . . . 7-42
8. Others . . . 7-44
   A. Disassembly/assembly/maintenance . . . 7-44

[8] SETTING AND ADJUSTMENTS
[ADJ 1] High voltage adjustment . . . 8-2
[ADJ 2] Image density sensor adjustment . . . 8-4
[ADJ 3] Image focus, image skew adjustment (LED (writing) unit) . . . 8-6
[ADJ 4] Image registration adjustment . . . 8-9
[ADJ 5] Image position/print area adjustment (Print engine section) . . . 8-15
[ADJ 6] Copy image distortion adjustment . . . 8-16
[ADJ 7] Copy image focus (main scanning direction copy magnification ratio) adjustment (CCD unit position adjustment) . . . 8-19
[ADJ 8] Sub scanning direction copy magnification ratio adjustment . . . 8-20
[ADJ 9] Main scanning direction copy image position adjustment (Scanner (reading) section) . . . 8-20
[ADJ 10] Copy image position/image loss/void area adjustment . . . 8-21
[ADJ 11] Copy color balance/density adjustment . . . 8-22
[ADJ 12] Fusing pressure adjustment . . . 8-36
[ADJ 13] Fusing paper guide position adjustment . . . 8-36
[ADJ 14] Document size sensor adjustment . . . 8-37
[ADJ 15] Manual paper feed tray paper size sensor adjustment . . . 8-37
[ADJ 16] Touch panel coordinates setting . . . 8-38
[ADJ 17] Power voltage adjustment . . . 8-38
[ADJ 18] FAX/scanner mode image loss adjustment . . . 8-38

[9] SIMULATION
1. Outline and purpose . . . 9-1
2. Code-type simulation . . . 9-1
   A. Operating procedures and operations . . . 9-1
   B. Simulation list . . . 9-3
   C. Details . . . 9-13

[10] MAINTENANCE LIST
1. Maintenance system table . . . 10-1
2. List . . . 10-2
   A. Drum peripheral section . . . 10-2
   B. Developing section . . . 10-2
   C. Transfer section . . . 10-3
   D. Fusing section . . . 10-4
   E. Optical section (Scanner section) . . . 10-5
   F. Paper feed section, transport section . . . 10-6
   G. LED . . . 10-6
   H. Filters, drive section, others . . . 10-7

[11] TROUBLESHOOTING
1. Outline . . . 11-1
2. Functions and purposes . . . 11-1
3. Kinds of self diagnostic messages . . . 11-1
4. Self diagnostic operation . . . 11-1
   A. Self diagnostic operation and work flow . . . 11-1
5. List . . . 11-2
6. Details . . . 11-3

[12] ROM VERSION UP
1. Outline . . . 12-1
   A. Target ROM for version up . . . 12-1
   B. When version up of ROM is required . . . 12-1
   C. Flash ROM version up method . . . 12-2
2. Precautions . . . 12-4
   A. Relationship between each ROM and version up . . . 12-4
3. Necessary items for version up (copy) of Flash ROM . . . 12-5
4. Flash ROM version up procedure . . . 12-6
   A. By using a computer and the ICU PWB, the program data of Flash ROM is written from the computer to the Flash ROM of the ICU PWB . . . 12-6
   B. Method using two Flash ROM sockets on the ICU MAIN PWB to copy between Flash ROM's . . . 12-9

[13] ELECTRIC DIAGRAM
1. Block diagram . . . 13-1
2. AC power line diagram . . . 13-5
3. DC power line diagram . . . 13-7
4. ACTUAL WIRING CHART . . . 13-8
5. Signal list . . . 13-26

[14] OTHERS
1. Key operator program . . . 14-1
   A. Classification of set items . . . 14-1
2. Special tools . . . 14-2

[1] OUTLINE

1. Product features

No.	Feature	Content	Employed technology
1	Compact, lightweight, A3 tandem engine	AR-C260: 670 x 676 x 709 mm (26.4 x 26.6 x 27.9 inch), about 67kg (about 148 lbs.) (Include OC) AR-C260M: 670 x 676 x 709mm (26.4 x 26.6 x 27.9 inch), about 69kg (about 152 lbs.) (Include OC)	Mono-component wax-free toner, LED printhead
	High speed output	Color: 26PPM B/W: 33PPM (A4) / 32PPM (LT)	
2	High-speed, first color copy	Color: 8.0sec (A4/LT, without pre-scan, side paper exit) B/W: 7.0sec	LED printhead
3	Automatic recognition of document kind	The document kind is automatically recognized from the document components by pre-scanning. (Photo, Print, Text, Photo/Text, and Print/Text are supported.)	Sharp's unique technology of automatic recognition of document kind, image process technology
4	Manual paper feed capacity	300 sheets/64g (17 lbs.)	Development of a large capacity manual feed tray
	Heavy paper support	64 to 300g/m^2 (17 to 80 lbs.)	Oil-less fusing unit, paper feed/paper transport technology
	Heavy paper duplex feed support	64 to 200g/m^2 (17 to 53 lbs.)	
5	Improved user maintenance	Paper jam process: 2 positions of open/close (sides)	Paper jam control technology
		Toner supply: Cartridge replacement	Mono-component wax-free toner
6	Improved service maintenance	Developing section: Mono-component development eliminates the need for developer replacement.	Mono-component wax-free toner
		Drum section: Cartridge replacement	Designed for easy maintenance
		Fusing section: Simplified structure by wax-free. The unit can be disassembled simply by releasing the lock with the knob.	Mono-component wax-free toner. Designed for easy maintenance
		Transfer section: One-touch extraction. Designed for easy belt replacement.	Designed for easy maintenance
		Color resist automatic adjustment: Visual judgment by paper exit is automatically performed.	Process control technology, which allows user adjustment.

2. Newly employed technology

	Item	Content	Remark
1	LED printhead employed	• Employment of the 4bit LED provides 16-gradation expressions for each of YMCK. • Free from mechanical noises which are produced from the unit such as an LSU. Printing is started immediately without waiting for stabilization of the polygon motor speed. • Lower power consumption than an LSU	Resolution: 600dpi (Total dots: 7,424 dots)
2	Oil-less fusing system employed	• Development of a new wax-free toner • The wax-free fusing system provides a simplified structure and improved paper feed capability. • Notes and remarks can be put on a copy image similar to normal page.	

[2] CONFIGURATION

1. Product Line and options

A. Line of machines

Model name	Composition
AR-C260/260M	Copier model/Printer model

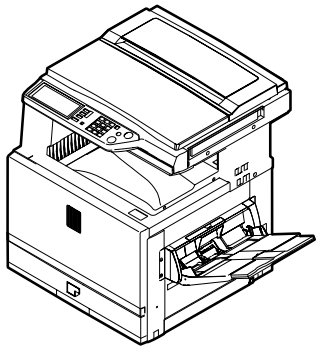

AR-C260/260M

B. Line of options

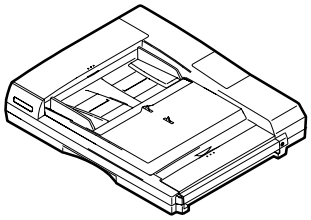	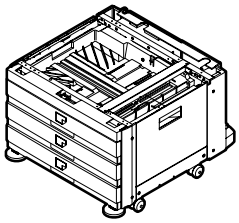	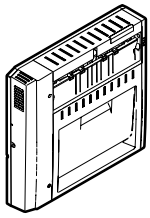
AR-RF3/Reversing automatic document feeder	AR-D18/Paper feed module (3-stage paper feed desk) AR-D17/Paper feed module (1-stage paper feed desk) (Outside Japan only)	AR-RB1/Duplex pass + Reverse unit (Requires (AR-D19).)
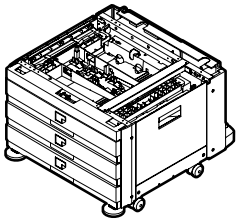	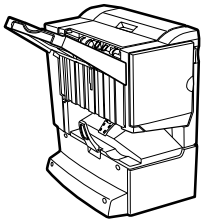	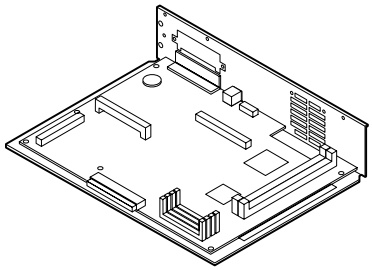
AR-D19/Duplex module + Paper feed module (2-stage) (Requires (AR-RB1).)	AR-F13/Saddle stitch finisher (Requires (AR-RB1).)	AR-P16/Printer controller (for AR-C260)

Line of other options

	Model	Name	Necessary option	Support model
Paper exit system	AR-PN1A	Punch unit (2-hole)	AR-F13/Saddle stitch finisher	
	AR-PN1BA	Punch unit (3-hole) (Outside Japan only)		
	AR-SC2	Staple cartridge		
Printer system	AR-NC5J	Print server card (NIC)	AR-P16/Printer controller	AR-C260
	AR-HD4	HDD		
	AR-NS2	Network scanner expansion kit		
	AR-U11, U15	Sharp desk license kit		
Other	AR-VR4	Original cover (Except Asia only)		
	AR-TE3	Paper exit tray (Except Asia only)		

C. Combination of options

Option name			Necessary option	Installing condition	Remark
Paper feed system	AR-D17	1-stage paper feed desk	—	Cannot use the 3-stage paper feed desk.	
	AR-D18	3-stage paper feed desk	—	Cannot use the 1-stage paper feed desk.	
	AR-D19	2-stage duplex paper feed desk	Reverse bypass module (AR-RB1)	—	
	AR-RB1	Reverse bypass module	Desk (AR-D19 only)	—	
	AR-LC5	Large capacity tray	Desk (Either of AR-D17/D18/D19)	—	Outside Japan only
Paper exit system	AR-F13	Saddle finisher	Desk (AR-D19) and Reverse bypass module (AR-RB1)	Cannot use the sorter.	
	AR-PN1A AR-PN1BA	Punch unit	Saddle finisher (AR-F13)	—	
	AR-S11	Sorter	Desk (AR-D19) and Reverse bypass module (AR-RB1)	Cannot use the saddle finisher.	Added in running change
Electrical system	AR-NC5J	NIC	Printer controller (AR-P16)	—	
	AR-HD4	HDD 3.5 inch (40GB)	Printer controller (AR-P16)	—	
		128MB expansion memory	—	—	Installed to the ICU (built in the machine) or the printer controller. (Use a commercially available product.)
		256MB expansion memory	—	—	
	AR-NS2	Network scanner expansion kit	Printer controller (AR-P16)	The MFP model has the printer controller installed.	

- Expansion memory

Manufacture	Capacity	DIMM model number
Kingston Technology	128MB	KVR133X64C3/128
	256MB	KVR 1 33X64C3-256
Simple Technology	128MB	RB 168S64-128A
	256MB	RB 168S64-256A
Viking Compnehts	128MB	VIK6642CL2
	256MB	VIK2642CL2
Memory Card Technology	128MB	DM1665VS65804X-7G

The following combinations are also inhibited.

- OC cover and Duplex automatic document feeder
- Paper feed module (1-stage desk)/Paper feed module (3-stage desk)/Revere bypass module + Paper feed module (2-stage) (Only one of them can be installed.)

2. Block diagram

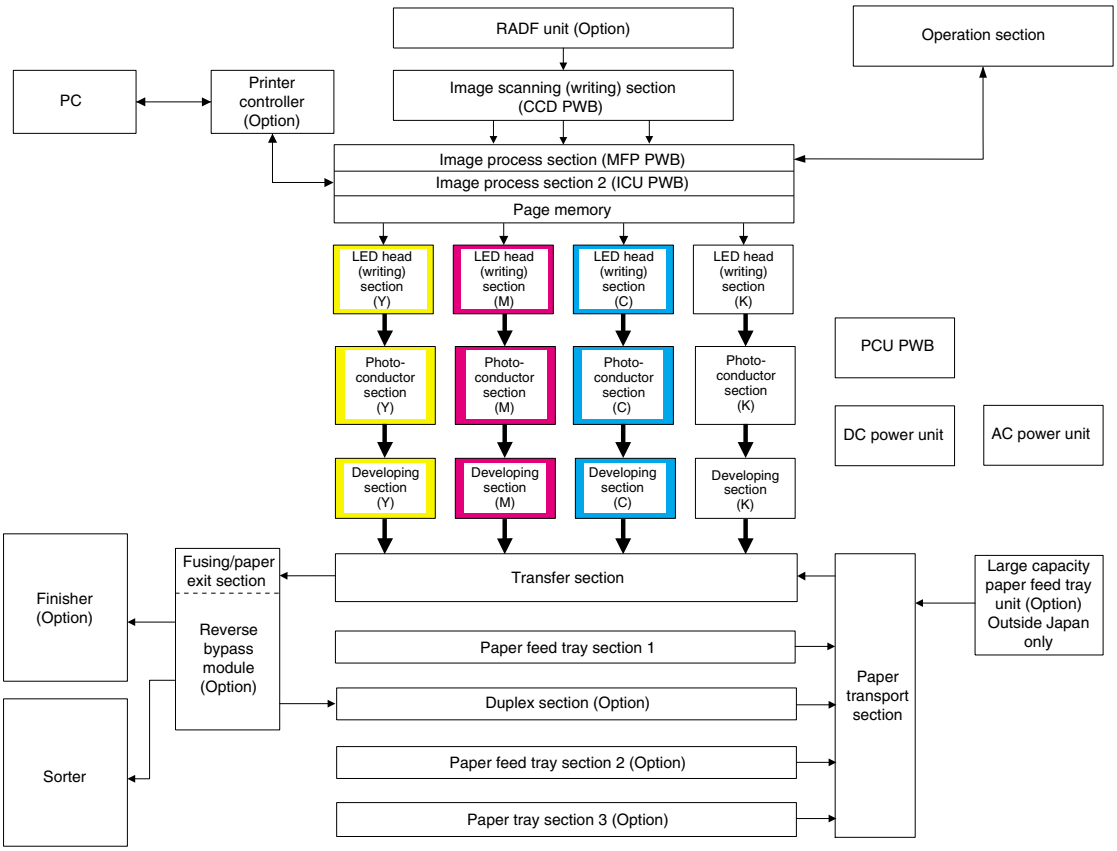

[3] SPECIFICATIONS

1. Basic specifications

A. Base engine

(1) Type

Type	Desk-top

(2) Engine speed

Paper size	Color		B/W	
	Print B/W 4bit mode (Image quality priority mode)	Copy	Print B/W 1bit mode only (Speed priority mode)	Copy
A4	26 ppm	26 cpm	33 ppm	33 cpm
8.5" x 11"	26 ppm	26 cpm	32 ppm	32 cpm
A5/8.5" x 5.5"	26 ppm	26 cpm	33 ppm	33 cpm
B5	26 ppm	26 cpm	33 ppm	33 cpm
B4/8.5" x 14"	15 ppm	15 cpm	17 ppm	17 cpm
A3/11" x 17"	13 ppm	13 cpm	15 ppm	15 cpm

(3) Engine composition

Photoconductor kind	OPC (Drum diameter: ϕ30mm x 4)
Recording system	Electronic photo system (LED head system)
Developing system	Contact, non-magnetic 1-component development
Charging system	Saw teeth scorotron corona charging
Transfer system	Transfer belt structure direct transfer system
Cleaning system	Counter blade cleaning system
Fusing system	Pressure roller fusing system
Oil supply	Oil-less system
Waste toner process	Self collection of each toner cartridge Waste toner box collection for transfer belt
Shifter	Standard

(4) Shifter

Type	Shifter			
Paper weight	64 to 105g/m^2, 106 to 200g/m^2			
Paper size	Non offset mode (Simple load) 64 to 200g/m^2		A3W to A5, Postcard, 12" x 18" to 8.5" x 5.5"	
	Offset mode 64 to 200g/m^2		A3 to A5 11" x 17" to 8.5" x 5.5"	
Productivity	Non offset mode: Color 26 sheets, B/W 32 sheets (LT)/33 sheets (A4) Offset mode: Color/B/W 24 sheets			
Offset width	30mm			
Alignment		Extending	FR shift	Between jobs
	Non offset mode	Must not fall from the tray.	—	—
	Offset mode	Within 50mm	Within ± 10mm	1 – 150 sheets: 10mm or more 151 sheets or more: 5mm or more
	∗ When A4/Letter recommended paper is used.			

(5) Engine resolution

Resolution	Writing: 600dpi x 600dpi	
Smoothing	None	
Gradation	Color	Writing: 1 pixel 16 gradations for each color ∗
	B/W	Writing: 1 pixel 2 gradations (1bit) 16 gradations (4bit)

∗ Dither matrix allows printing in 1-pixel, 256-gradation (8bit).

(6) Warm-up

Warm-up time	99sec
Pre-heat function	Yes

(7) Jam recovery time

With the left cover open	About 60sec	60sec left standard condition
With the right and front covers open	About 8sec	

(8) Image chip (Printable area)

Full size	Total circumference 4mm ± 2mm Only when A3 full image is outputted, 6mm or less in total. CHP1 mode: 10mm or less at lead/rear edges

(9) Power source

Voltage	100V / 120V
Frequency	50/60Hz
Power cord	Inlet type

(10) Power consumption

Max. power consumption	1450W
Stand-by (average)	180W
Low power mode	90Wh
Sleep mode	15Wh or less
Energy consumption efficiency	257Wh/h

(11) Noise/Ozone

Noise	Operating	B/W	68dB or less
		Color	63dB or less
	Stand-by		55dB or less
	Sleep		40dB or less
Ozone			0.02g/m^3 or less

(12) External dimensions

	Copier (without desk)	Copier (with 3-stage desk)
Floor to Glass surface	670 x 676 x 655mm (26.4 x 26.6 x 25.8 inch)	670 x 676 x 1049mm (26.4 x 26.6 x 41.3 inch)
Floor to OC top surface	670 x 676 x 709mm (26.4 x 26.6 x 27.9 inch)	670 x 676 x 1104mm (26.4 x 26.6 x 43.5 inch)

(13) Weight

Toner cartridge	Copier (without desk)	Copier (with 3-stage desk)
Not installed	About 85kg (About 187 lbs.)	About 114.5kg (About 252 lbs.)
Installed	About 95kg (About 209 lbs.)	About 124.5kg (About 274 lbs.)

(14) Machine occupying dimensions

Machine occupying dimensions (Machine only, with the trays full open)	994 x 676mm (39.1 x 26.6 inch)

B. Paper feed unit

(1) Machine paper feed tray

Paper feed system	1-stage tray
Paper feed size	AB series: A3, B4, A4, A4R, B5, B5R, A5, Special paper Inch series: 11" x 17", 8.5" x 14", 8.5" x 13", 8.5" x 11", 8.5" x 11"R, 8.5" x 5.5", A4, EXTRA
Paper feed capacity	550 sheets (64g/m^2 (17 lbs.) paper) 500 sheets (80g/m^2 (21 lbs.) paper, recommended paper for color)
Weight of paper suitable for paper feed	64 to 105g/m^2 (17 to 28 lbs)
Paper kind	Normal paper (including recommended paper for color), recycled paper, printed paper, punched paper, color paper, letter head
Paper size detection	Slide lever detection
Paper size selection	Use selection (Special paper size is inputted from the operation panel.)
Heater	Yes (Japan Only)
Remaining quantity detection	Yes (0, 25%, 50%, 75%, Full, 5 steps)
Initial size when shipping	A3 (11" x 17")
Tray attach/detach	Possible
Universal support	Universal tray (free size)

(2) Manual feed tray (Bypass tray)

Transport reference	Center reference
Paper feed capacity	250 sheets (80g/m^2), 300 sheets (64g/m^2), 100 sheets (Postcard)
Paper size	A3W to A6R (Postcard)
Paper weight	64 to 300g/m^2 / 17 to 80lbs specified paper for color
Paper kind	Normal paper (including recommended paper for color), OHP1, OHP2. heavy paper 1 (106 to 200g/m^2 (28 to 53 lbs.)), heavy paper 2 (201 to 300g/m^2 (54 to 80 lbs.)), envelope
Paper size detection	Inch series: 12" x 18", 11" x 17", 8.5" x 14", 8.5" x 11", 8.5" x 11"R, 7.25" x 10.5"R, 8.5" x 5.5", A3, B4, A4, B5, A6R AB series: A3W, A3, B4, A4, A4R, B5, A5, A6R, 11" x 17", 8.5" x 14", 8.5" x 11", 7.25" x 10.5"R
Manual feed size setup	Yes (Ignoring automatic setup) Selected with key operation.

Detection of 8.5 x 14 can be changed to detection of 8.5 x 13 (216 x 330) with the simulation.

C. Paper exit unit

(1) Face down paper exit tray (Top section)

Paper exit position/system	Machine top face down paper exit
Paper exit capacity	500 sheets (A4/LT recommended paper for color)
Paper size	A6R (Postcard), 8.5 x 5.5 to A3W
Paper weight	64 to 200g/m^2 (17 to 53 lbs.)
Paper kind	Normal paper (including recommended paper for color), heavy paper 1 (106 to 200g/m^2 (28 to 53 lbs.))
Remaining quantity detection	No
Discharged paper full detection	Yes

(2) Face up paper exit tray (sides)

Paper exit position/system	Machine side face up paper exit
Paper exit capacity	250 sheets (A4/LT recommended paper for color)
Paper size	All sizes which are fed
Paper weight	64 to 300g/m^2 (17 to 80 lbs.)
Paper kind	All sizes which are fed (except for OHP sheets)
Remaining quantity detection	No
Discharged paper full detection	Yes

(3) Face down paper exit tray (side) (With the reverse unit installed)

Paper exit position/system	Machine side face down paper exit
Paper exit capacity	250 sheets (A4/LT recommended paper for color)
Paper size	AB series: A3W, A3, B4, A4, A4R, B5, B5R, A5 Inch series: 12" x 18", 11" x 17", 8.5" x 14", 8.5" x 11", 8.5" x 11"R, 7.25" x 10.5"R, 8.5" x 5.5", A3, B4, A4, B5
Paper weight	64 to 200g/m^2 (17 to 53 lbs.)
Paper kind	Normal paper (including recommended paper for color)
Remaining quantity detection	No
Discharged paper full detection	Yes

(4) Face up paper exit tray (side) (With the reverse unit installed)

Paper exit position/system	Machine side face up paper exit
Paper exit capacity	250 sheets (A4/LT recommended paper for color)
Paper size	A3W to A5R (Postcard)
Paper weight	64 to 300g/m^2 (17 to 80 lbs.)
Paper kind	Normal paper (including recommended paper for color), OHP, heavy paper (106 to 300g/m^2 (28 to 80 lbs.)), all other paper which is supported by the machine.
Remaining quantity detection	No
Discharged paper full detection	Yes

D. Scanner section

(1) Resolution, gradation

Scan resolution (dpi)	600 x 600dpi
Scan speed	Color 16opm / B/W 19opm: A4/LT size
Scan gradation	256 gradations for each color 2 gradations for scanner B/W mode only
Exposure lamp	Xenon lamp without electrode tube
Output gradation	8bit for each color 1bit for Scanner B/W mode only

(2) Document table

Scan range	(A3/WLT full image scan)	
Document reference position	Center reference	
Detection	Yes	
Detection size	Automatic detection	
	Inch series	<INCH-1: Default> 11" x 17", 8.5" x 14", 8.5" x 11", 8.5" x 11"R, 5.5" x 8.5"
		<INCH-2> 11" x 17", 8.5" x 13", 8.5" x 11", 8.5" x 11"R, 5.5" x 8.5"
	AB series	<AB-1: Default> A3, B4, A4, A4R, B5, B5R, A5
		<AB-2> A3, 8.5" x 13" (216 x 330), A4, A4R, B5, B5R, A5
	Manual doc size selection	Yes

2. Functional specifications

A. Specifications of copy functions

(1) Copy speed (Continuous copy speed)

Color / B/W		Color				B/W			
Print/Copy		Print	Copy			Print	Copy		
Paper size	Magnification ratio	B/W 4bit (Image priority mode)	Reduction (25%)	Normal (100%)	Enlargement (400%)	B/W 1bit (Speed priority mode) *3	Reduction (25%)	Normal (100%)	Enlargement (400%)
A3W (12" x 18")		7 ppm	7 cpm	7 cpm	7 cpm	7 ppm	7 cpm	7 cpm	7 cpm
A3 (11" x 17"), 8K		13 ppm	13 cpm	13 cpm	13 cpm	15 ppm	15 cpm	15 cpm	15 cpm
B4 (8.5" x 14" / 8.5" x 13")		15 ppm	15 cpm	15 cpm	15 cpm	17 ppm	17 cpm	17 cpm	17 cpm
A4		26 ppm	26 cpm	26 cpm	26 cpm	33 ppm	33 cpm	33 cpm	33 cpm
8.5" x 11"		26 ppm	26 cpm	26 cpm	26 cpm	32 ppm	32 cpm	32 cpm	32 cpm
A4R (8.5" x 11"R)		19 ppm	19 cpm	19 cpm	19 cpm	22 ppm	22 cpm	22 cpm	22 cpm
B5, 16K		26 ppm	26 cpm	26 cpm	26 cpm	33 ppm	33 cpm	33 cpm	33 cpm
B5R (7.25" x 10.5"R), 16KR		19 ppm	19 cpm	19 cpm	19 cpm	22 ppm	22 cpm	22 cpm	22 cpm
A5 (8.5" x 5.5")		26 ppm	26 cpm	26 cpm	26 cpm	33 ppm	33 cpm	33 cpm	33 cpm
A6R (Postcard)		6 ppm	6 cpm	6 cpm	6 cpm	6 ppm	6 cpm	6 cpm	6 cpm
A6R (Normal paper)		13 ppm	13 cpm	13 cpm	13 cpm	15 ppm	15 cpm	15 cpm	15 cpm
OHP (Speed *2), A4 (LT)		26 ppm	26 cpm	26 cpm	26 cpm	26 ppm	26 cpm	26 cpm	26 cpm
OHP (Image quality), A4 (LT)		13 ppm	13 cpm	13 cpm	13 cpm	13 ppm	13 cpm	13 cpm	13 cpm
Heavy paper 1 (106 to 200g/m^2), A4 (LT) or less		13 ppm	13 cpm	13 cpm	13 cpm	13 ppm	13 cpm	13 cpm	13 cpm
Heavy paper 2 (201 to 300g/m^2), A4 (LT) or less		13 ppm	13 cpm	13 cpm	13 cpm	13 ppm	13 cpm	13 cpm	13 cpm
Envelope *1 (All kinds)		7 ppm	7 cpm	7 cpm	7 cpm	7 ppm	7 cpm	7 cpm	7 cpm
Size specified, EXTRA		7 ppm	7 cpm	7 cpm	7 cpm	7 ppm	7 cpm	7 cpm	7 cpm
Size not specified, EXTRA		7 ppm	7 cpm	7 cpm	7 cpm	7 ppm	7 cpm	7 cpm	7 cpm

* ppm: page per minute when printing two or more pages of a same document.
  cpm: copy per minute in 1-scan multi copy mode

* 1: Envelope kind: COM10, Monarch, DL, C5, Long No.3, Western type No. 2, Western type No. 4

* 2: Max. speed

* 3: Same as color print in the image quality priority mode (B/W 4bit)

(2) First copy time

Platen/ RADF	Pre-scan	Paper exit position	Rotation copy	B/W	Color
Platen	No	Side face up	No	Within 7.0sec (A4/LT)	Within 8.0sec (A4/LT)
			Yes	Within 8.9sec (A4)	Within 10.7sec (A4)
		Machine face down	No	Within 8.8sec (A4/LT)	Within 10.2sec (A4/LT)
			Yes	Within 10.7sec (A4/LT)	Within 12.6sec (A4/LT)
	Yes	Side face up	No	—	Within 10.9sec (A4/LT)
			Yes	—	Within 14.3sec (A4)
		Machine face down	No	—	Within 12.9sec (A4/LT)
			Yes	—	Within 16.3sec (A4/LT)
RADF	No	Side face up	No	8.0sec	9.5sec
			Yes	Within 10.4sec (A4)	Within 12.3sec (A4)
		Machine face down	No	9.8sec	11.7sec
			Yes	Within 12.1sec (A4/LT)	Within 14.0sec (A4/LT)
	Yes	Side face up	No	—	12.2sec
			Yes	—	Within 15.7sec (A4)
		Machine face down	No	—	14.4sec
			Yes	—	Within 17.6sec (A4/LT)

* When the RADF is used, the data are those without APS.

(3) Job speed

Controller			128MB+256MB ICU: 256MB	
B/W / Color			B/W	Color
Copy method	10 x 1 set S to S	(A4) (Letter)	19 cpm	16 cpm
	10 x 5 sets S to D	(A4) (Letter)	33 cpm 32 cpm	26 cpm
	5 x 5 sets D to D	(A4) (Letter)	33 cpm 32 cpm	26 cpm

Copy conditions: Document size A4 (8.5" x 11"), transfer belt position: B/W position, excluding pre-scan

Note: The above are speeds of copying a single document excluding the pre-rotation and after-rotation of the process and paper cycle time.

(4) Continuous copy

Multi max. number	999 sheets

(5) Resolution

Scan resolution	600 x 600dpi
Writing resolution	600 x 600dpi

(6) Copy magnification ratio

Copy magnification ratio	AB series: 25%, 50%, 70%, 81%, 86%, 100%, 115%, 122%, 141%, 200%, 400% Inch series: 25%, 50%, 64%, 77%, 95%, 100%, 121%, 129%, 200%, 400%
Custom magnification ratio registration	AB series/Inch series: 4 keys (2E/2R)
Zoom	25%, 45 to 400% (1% increment)
Independent zoom	Yes (25, 45 to 400%)

(7) Density, copy image process

Exposure mode	Color (Hexadecimal)	Auto: Auto, Pre-scan allowed
	B/W (Binary)	Auto: Text Auto: AE, Pre-scan inhibited
Color enhancement		Yes (Valid for Text, Text/Print, Text/Photo, Print, Photo, Map)
Manual steps		9 steps
Smoothing process		No
Toner save mode		Yes (for B/W)

(8) Copy functions

Functions	APS	Yes
	AMS	Yes
	ACS (Auto Color Selection)	No
	Paper type select	Yes
	Free size input	Document: Yes Paper: Yes (Manual feed cassette)
	Auto tray switching	Yes
	Rotation copy	Yes (A4/8.5 x 11/B5/16K paper size only)
	Rotation sort	No
	Electronic sort (E-RDH)	Yes (B/W only)
	Copy reservation	No
	Program call/registration	Yes (Max. 9 items)
	Proof copy	No
	Pre-heat	Yes (Conditions are set by the key operation.)
	Auto power shut off	Yes (Conditions are set by the key operation.)
	Department management	Yes (200 departments)
	Key operator program	Yes
	Communication support (RIC)	Yes (Requires Connector or Installing port.)
	Process control	Yes
	Card counter support	Option (Japan only)
	Con vendor support	Yes (A connector must be installed inside the machine.)
Special functions	Binding margin	Yes
	Edge erase/Center erase	Yes
	1 set 2 copy	Yes
	Cover paper	Yes (Color, one sheet only)
	OHP insert paper	Yes (White paper insertion only)
	Insert paper insertion (Index)	No
	Centering	Yes
	Multi shot (N in 1)	Yes (Ruled line ON/OFF allowed)
	Center binding	Option (B/W only) * Requires Duplex desk, Duplex pass/Inverter, Saddle finisher (in saddle stitch only).
	Duplex copy direction switch	Option * Requires Duplex desk, Duplex pass/Inverter.
	Negative/Positive conversion	No
	Photo repeat	Yes (2/4/8/12/16/24)10 is for visiting cards.
	RGB adjustment	Yes
	Color balance	Yes

Special functions	Color Gamma adjustment	Yes
	Brightness adjustment	Yes
	Contrast adjustment	No
	Sharpness adjustment	Yes
	Mirror image	Yes
	Single color	6 colors (R, G, B, C, M, Y)
	Enlargement continuous copy	Yes
	Background erase	Yes
	A3 wide copy	Yes
	Auto color calibration	Yes
	Auto registration	Yes

(9) Memory limitation matrix

Copier specifications		ICU PWB	Combination	Standard	Expansion 1	Expansion 2
			Standard (Slot 1)	256MB	256MB	256MB
			Expansion memory (Slot 2)	—	128MB	256MB
			Total memory capacity	256MB	384MB	512MB
		Mode	Document size	—	—	—
Copy	Single	Color	to A4 (8.5" x 11")	SOPM	SOPM	SOPM
			B4, A3 (8.5" x 14", 11" x 17")	SOPM	SOPM	SOPM
			A3W (12" x 18")	SOPM	SOPM	SOPM
		B/W	to A4 (8.5" x 11")	400 surfaces	400 surfaces	680 surfaces
			B4, A3 (8.5" x 14", 11" x 17")	200 surfaces	200 surfaces	340 surfaces
			A3W (12" x 18")	165 surfaces	165 surfaces	280 surfaces
	Duplex	Color	to A4 (8.5" x 11")	SOPM	SOPM	SOPM
			B4, A3 (8.5" x 14", 11" x 17")	No	SOPM	SOPM
			A3W (12" x 18")	—	—	—
		B/W	to A4 (8.5" x 11")	400 surfaces	400 surfaces	680 surfaces
			B4, A3 (8.5" x 14", 11" x 17")	200 surfaces	200 surfaces	340 surfaces
			A3W (12" x 18")	—	—	—

B/W (Electronic sort): Equivalent to "TEST SHEET B."

SOPM: Scan Once Print (Copy) Many

3. Environment conditions

A. Operating environment conditions

(1) Temperature and humidity

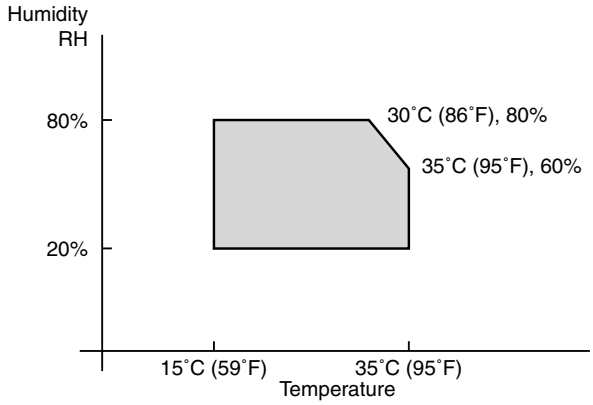

(2) Power voltage and frequency

Power voltage	Specified voltage ±10%
Power frequency	Specified frequency ±2%

B. Storage environment conditions

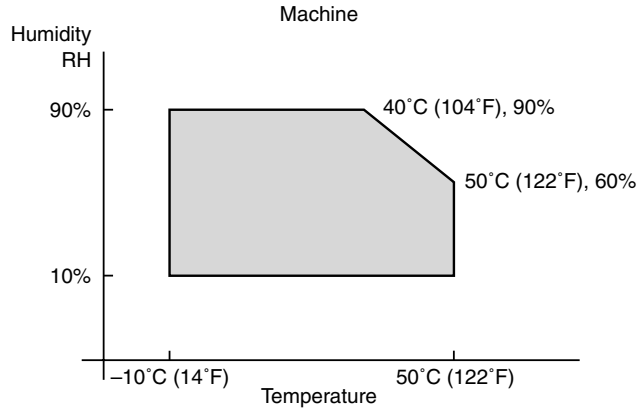

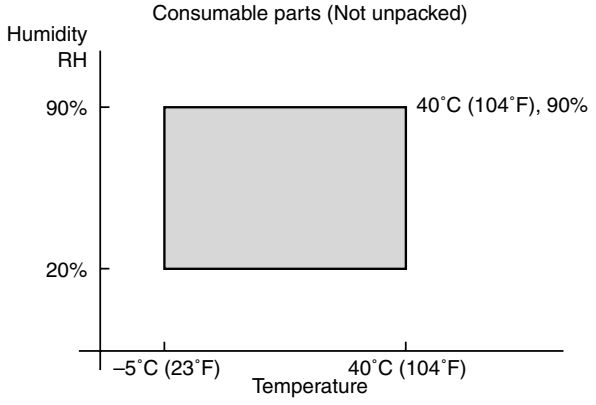

C. Transit environment conditions

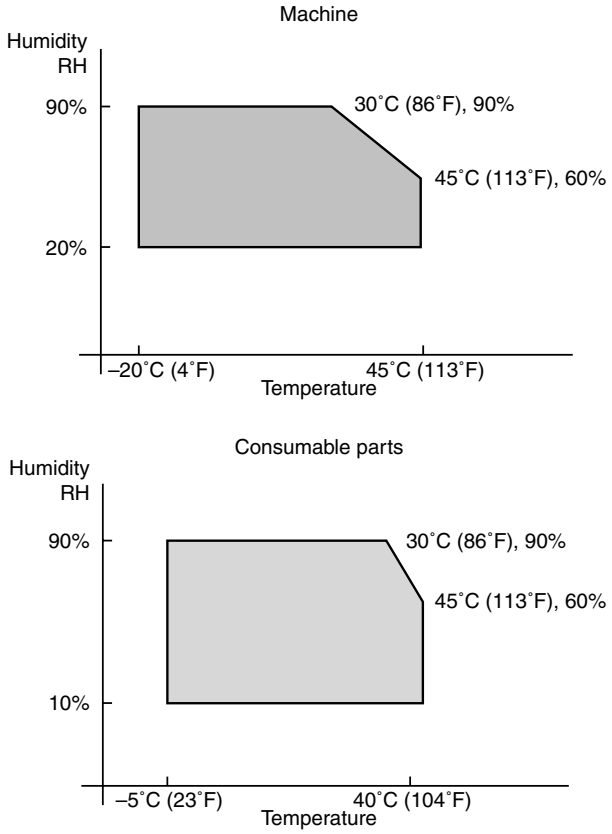

D. Standard temperature and humidity

Temperature	20 to 25°C (68 to 77°F)
Humidity	65 ±5%

[4] CONSUMABLE PARTS

1. Supply system table

A. USA/Canada

	Part name	Model name	Content		Life	Packing	Remark
1	Toner (Black)	AR-C26TBU	Toner cartridge (Black)	x 1	16.7K (A4/LT 6%)	10	For A4/LT 5%, life is 20K.
2	Color toner (Cyan)	AR-C26TCU	Toner cartridge (Cyan)	x 1	5.5K (A4/LT 10%)	10	
3	Color toner (Magenta)	AR-C26TMU	Toner cartridge (Magenta)	x 1	5.5K (A4/LT 10%)	10	
4	Color toner (Yellow)	AR-C26TYU	Toner cartridge (Yellow)	x 1	5.5K (A4/LT 10%)	10	
5	Photoconductor drum cartridge	AR-C26DU	Drum cartridge (including OPC drum & unit parts)	x 1	50K	10	
			Color identification seal (Y/M/C/K)	x 1 each			
6	Drum	AR-C26DR	OPC Drum	x 1	50K	10	
7	Main charger kit	AR-C26MK	Charging unit	x 1	50K	10	
			Cleaning blade	x 1			
			Toner reception seal	x 1			

B. Europe/Australia

	Part name	Model name	Content		Life	Packing	Remark
1	Toner (Black)	AR-C26TBE	Toner cartridge (Black)	x 1	16.7K (A4/LT 6%)	10	For A4/LT 5%, life is 20K.
2	Color toner (Cyan)	AR-C26TCE	Toner cartridge (Cyan)	x 1	5.5K (A4/LT 10%)	10	
3	Color toner (Magenta)	AR-C26TME	Toner cartridge (Magenta)	x 1	5.5K (A4/LT 10%)	10	
4	Color toner (Yellow)	AR-C26TYE	Toner cartridge (Yellow)	x 1	5.5K (A4/LT 10%)	10	
5	Photoconductor drum cartridge	AR-C26DUE	Drum cartridge (including OPC drum & unit parts)	x 1	50K	10	
			Color identification seal (Y/M/C/K)	x 1 each			
6	Drum	AR-C26DM	OPC Drum	x 1	50K	10	
7	Main charger kit	AR-C26MKE	Charging unit	x 1	50K	10	
			Cleaning blade	x 1			
			Toner reception seal	x 1			

C. Central & South America

	Part name	Model name	Content		Life	Packing	Remark
1	Toner (Black)	AR-C26TBA	Toner cartridge (Black)	x 1	16.7K (A4/LT 6%)	10	For A4/LT 5%, life is 20K.
2	Color toner (Cyan)	AR-C26TCA	Toner cartridge (Cyan)	x 1	5.5K (A4/LT 10%)	10	
3	Color toner (Magenta)	AR-C26TMA	Toner cartridge (Magenta)	x 1	5.5K (A4/LT 10%)	10	
4	Color toner (Yellow)	AR-C26TYA	Toner cartridge (Yellow)	x 1	5.5K (A4/LT 10%)	10	
5	Photoconductor drum cartridge	AR-C26DU	Drum cartridge (including OPC drum & unit parts)	x 1	50K	10	
			Color identification seal (Y/M/C/K)	x 1 each			
6	Drum	AR-C26DR	OPC Drum	x 1	50K	10	
7	Main charger kit	AR-C26MK	Charging unit	x 1	50K	10	
			Cleaning blade	x 1			
			Toner reception seal	x 1			

D. Philippine/Taiwan/SMEF

	Part name	Model name	Content		Life	Packing	Remark
1	Toner (Black)	AR-C26TBP	Toner cartridge (Black)	x 1	16.7K (A4/LT 6%)	10	For A4/LT 5%, life is 20K.
2	Color toner (Cyan)	AR-C26TCP	Toner cartridge (Cyan)	x 1	5.5K (A4/LT 10%)	10	
3	Color toner (Magenta)	AR-C26TMP	Toner cartridge (Magenta)	x 1	5.5K (A4/LT 10%)	10	
4	Color toner (Yellow)	AR-C26TYP	Toner cartridge (Yellow)	x 1	5.5K (A4/LT 10%)	10	
5	Photoconductor drum cartridge	AR-C26DU	Drum cartridge (including OPC drum & unit parts)	x 1	50K	10	
			Color identification seal (Y/M/C/K)	x 1 each			
6	Drum	AR-C26DR	OPC Drum	x 1	50K	10	
7	Main charger kit	AR-C26MK	Charging unit	x 1	50K	10	
			Cleaning blade	x 1			
			Toner reception seal	x 1			

E. SOCC parts

	Part name	Model name	Content		Life	Packing	Remark
1	Toner (Black)	AR-C26TB-C	Toner cartridge (Black)	x 1	16.7K (A4/LT 6%)	10	For A4/LT 5%, life is 20K.
2	Color toner (Cyan)	AR-C26TC-C	Toner cartridge (Cyan)	x 1	5.5K (A4/LT 10%)	10	
3	Color toner (Magenta)	AR-C26TM-C	Toner cartridge (Magenta)	x 1	5.5K (A4/LT 10%)	10	
4	Color toner (Yellow)	AR-C26TY-C	Toner cartridge (Yellow)	x 1	5.5K (A4/LT 10%)	10	
5	Photoconductor drum cartridge	AR-C26DU-C	Drum cartridge (including OPC drum & unit parts) Color identification seal (Y/M/C/K)	x 1 x 1 each	50K	10	
6	Drum	AR-C26DR-C	OPC Drum	x 1	50K	10	
7	Main charger kit	AR-C26MK-C	Charging unit Cleaning blade Toner reception seal	x 1 x 1 x 1	50K	10	

F. SRH parts

	Part name	Model name	Content		Life	Packing	Remark
1	Toner (Black)	AR-C26TB-C	Toner cartridge (Black)	x 1	16.7K (A4/LT 6%)	10	For A4/LT 5%, life is 20K.
2	Color toner (Cyan)	AR-C26TC-C	Toner cartridge (Cyan)	x 1	5.5K (A4/LT 10%)	10	
3	Color toner (Magenta)	AR-C26TM-C	Toner cartridge (Magenta)	x 1	5.5K (A4/LT 10%)	10	
4	Color toner (Yellow)	AR-C26TY-C	Toner cartridge (Yellow)	x 1	5.5K (A4/LT 10%)	10	
5	Photoconductor drum cartridge	AR-C26DU-C	Drum cartridge (including OPC drum & unit parts) Color identification seal (Y/M/C/K)	x 1 x 1 each	50K	10	
6	Drum	AR-C26DR-C	OPC Drum	x 1	50K	10	
7	Main charger kit	AR-C26MK-C	Charging unit Cleaning blade Toner reception seal	x 1 x 1 x 1	50K	10	

2. Consumables (kit, unit)

	Part name	Model name	Content		Life
1	Upper heat roller kit	AR-C26UH	Upper heat roller Heat roller 60T gear Upper heat roller bearing Thermistor Upper heat roller stopper	x 1 x 1 x 2 x 1 x 2	100K *1
2	Lower heat roller kit	AR-C26LH	Lower heat roller Lower heat roller bearing Thermistor Lower heat roller stopper Fusing separation pawl lower	x 1 x 2 x 1 x 2 x 2	100K *1
3	Transfer belt kit	AR-C26TT	Transfer belt	x 1	100K *1
4	Transfer roller kit	AR-C26TX	Transfer roller	x 4	100K
5	Transfer waste toner tank unit	AR-C26HB	Transfer waste toner tank unit	x 1	100K
6	Filter kit	AR-C26FL	Ozone filter A Ozone filter B	x 1 x 1	50K
7	Saddle staple cartridge	AR-SC2	—		
5	Fusing unit	AR-C26FU (230V heater lamp) AR-C26FU1 (120V heater lamp) AR-C26FU2 (100V heater lamp)	Fusing unit for servicing (including upper/lower heater lamps)		*1
6	Transfer belt unit	AR-C26TU	Transfer unit for servicing		100K *1

*1: Replace at 100K or within 2 years

3. Photoconductor, developer, toner

A. Lot number identification and the term of validity

(1) Photoconductor

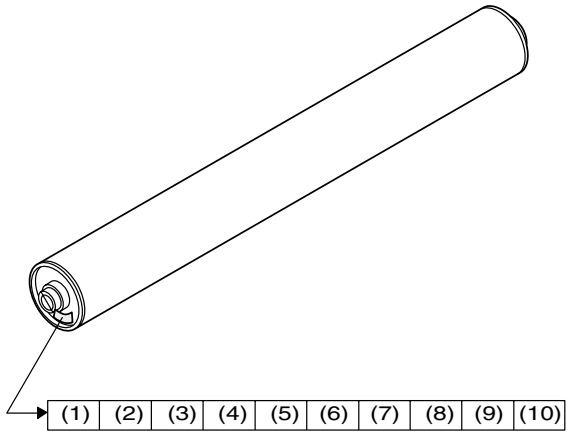

(1) Figure
2 for this model
(2) Alphabet
Indicates the model support code.
(3) Figure
Indicates the end digit of the production year.
(4) Figure or X, Y, Z
Indicates the production month. (X= October, Y= November, Z= December)
(5) (6) Figure
Indicates the production day.
(7) Figure or X, Y, Z
Indicates the packing month. (X= October, Y= November, Z= December)
(8) (9) Figure
Indicates the packing day.
(10) Figure or alphabet
Indicates the production division.

The term of validity: 36 months from the production day (month).

(2) Photoconductor cartridge

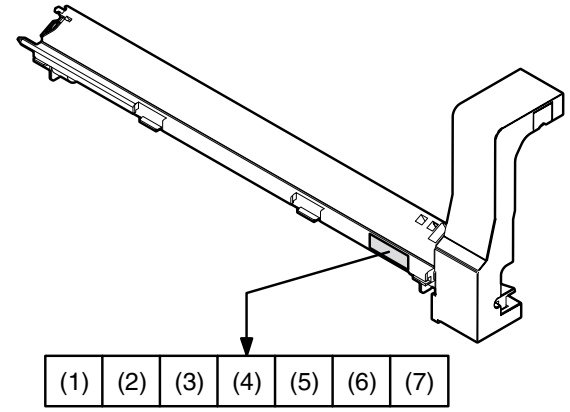

(1) Figure
Version No.
(2) Figure
The end digit of the year.
(3) Alphabet
Production code (B for SOCC)
(4) Alphabet
Destination code
(5) (6) Figure
Production day
(7) Figure or X, Y, Z
Indicates the production month. (X= October, Y= November, Z= December)

The term of validity: 24 months from the production day (month).

(3) Toner cartridge

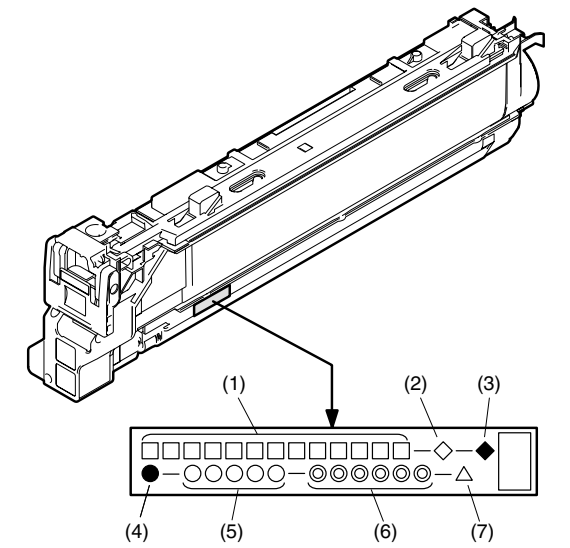

(1) Alphabet or figure
Unit code
(2) Alphabet
Destination code
(3) Alphabet
Skating
(4) Alphabet
Production site code
(5) Figure
Serial number (5 digits)
(6) Figure
Production year, month, day (6 digits)
(7) Alphabet
Version No. (A ~ sequentially revised)

The term of validity: 24 months from the production day (month).

[5] UNPACKING AND INSTALLATION

1. Installing (use) conditions

Before installing the machine, check that the following installing (use) conditions are satisfied.

If the installing (use) conditions are not satisfied, the machine may not display full performances, resulting in troubles. It may also cause safety problems. Therefore, be sure to arrange the installing (use) conditions before setting up the machine.

No.	Content
1	Bringing space
2	Installing space
3	Power source (Capacity, fluctuation, safety)
4	Floor strength
5	Direct rays of the sun, dust, temperature, humidity, gases, chemicals

A. Bringing space

For installation of a large size machine, be sure to check that the door size is great enough before bringing in.

B. Installing space

The following space must be provided around the machine in order to assure machine performances and proper operations.

If any option is installed, provide the additional space for installing it.

Especially the space at the rear of the machine must be provided sufficiently. If not, the machine cannot exhibit functions against heat and dust, causing some troubles.

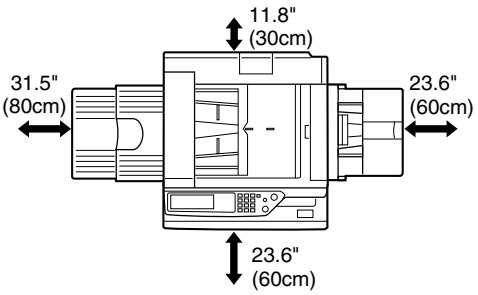

C. Power source (Capacity, voltage, frequency, safety, plug)

If the power specifications are not satisfied, the machine cannot exhibit full performances and may cause safety trouble.

Strictly observe the following specifications.

(1) Power capacity

Check that the following power capacity is satisfied. If not, additionally provide a power source.

Current capacity

Japan: 20A or more

100V: 15A or more

200V: 10A or more

(2) Power voltage

Measure the voltage during copying to check that the voltage is in the range of the specified voltage ±10%.

If the voltage is outside the specified range, use thicker lead wires to reduce impedance.

(An electrical work is required.)

Use of a step-up transformer is also available. In this case, the capacity must be great enough for the max. power consumption of the machine.

(3) Power frequency, waveform

The frequency must be within the range of the specified frequency ±2%. If power waveform is deformed, a trouble may occur.

(4) Safety

Be sure to properly ground the machine.

(5) Power plug

Check the form of the power plug. If the shape does not match, do not use it.

D. Floor strength and level

This machine is considerably heavy and becomes heavier with an option installed.

The floor must be strong enough for assuring safety.

If not, color shift or image distortion may occur.

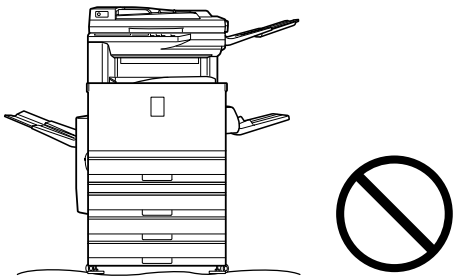

E. Direct rays of the sun, dust, temperature, humidity, gasses, chemicals, vibration

(1) Temperature and humidity

This machine is designed to perform properly under the specified temperature and humidity. If the temperature and humidity exceeds the specified range, the machine may not operate properly and or cause equipment failure.

Especially when the humidity is too high, paper absorbs humidity to cause a paper jam or dirty copy.

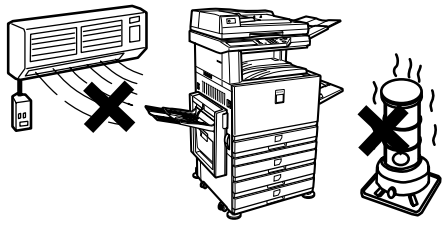

(Do not install the machine near a stove, a humidifier, or an air conditioner.)

Do not install the machine near a heater, a cooler, or a humidifier.

Dew may be formed inside the machine to cause a trouble. Use enough care for ventilation.

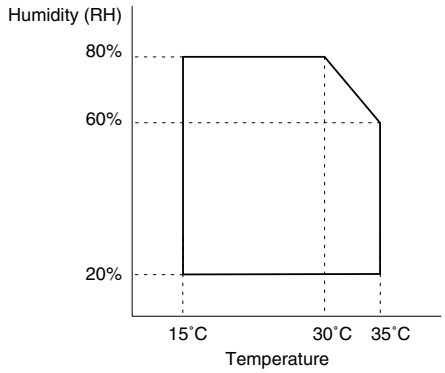

(2) Dust

If dust enters the machine, it may cause dirty copy and a paper jam, resulting in a shortened lifetime.

(3) Direct rays of the sun

If the machine is installed under the rays of the sun, the exterior of the machine may be discolored and abnormal copies may be produced.

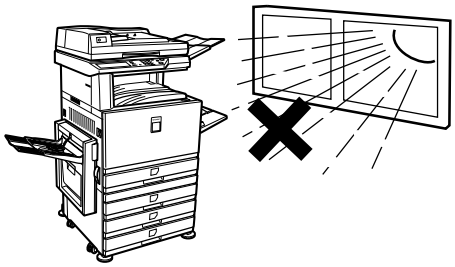

(4) Gases and chemicals

Do not install the machine at a place where there are gases and chemicals. Especially be careful to avoid installation near a diazo-type copier, which produces ammonium gas.

Copy quality may be adversely affected and a trouble may be caused.

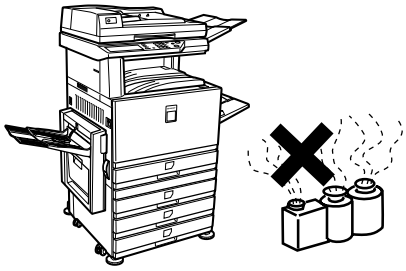

(5) Vibration

Avoid installation near a machine which produces vibrations.

If vibrations are applied to the copier machine, copy images may be deflected and a trouble may be caused.

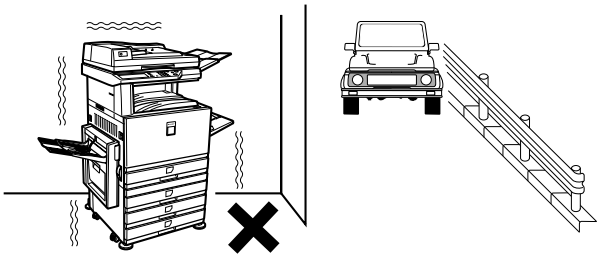

2. Transit and delivery

No.	Content	Method
1	Implements, facility, and man power	Use a forklift. (If no forklift is available, manpower of four persons is required.)
2	Delivery	Transit must be made in packed condition.

A. Implements, facility, and manpower

It is recommendable to use a forklift for bringing in the machine for safety.

If no forklift is available, man-power of four persons is required. The machine is considerably heavy, and requires safety precautions for delivery and installation.

Transit of the machine must be made in packed condition to the installing place.

B. Delivery

Remove the packing materials prior to installation in the ofice environment.

3. Unpacking

A. Unpacking procedure

1) Remove the PP band.
2) Remove the top case.
3) Remove the internal packing pads and the items packed together with the machine.
4) Remove the machine from the package.

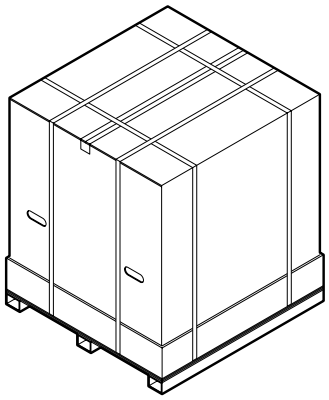

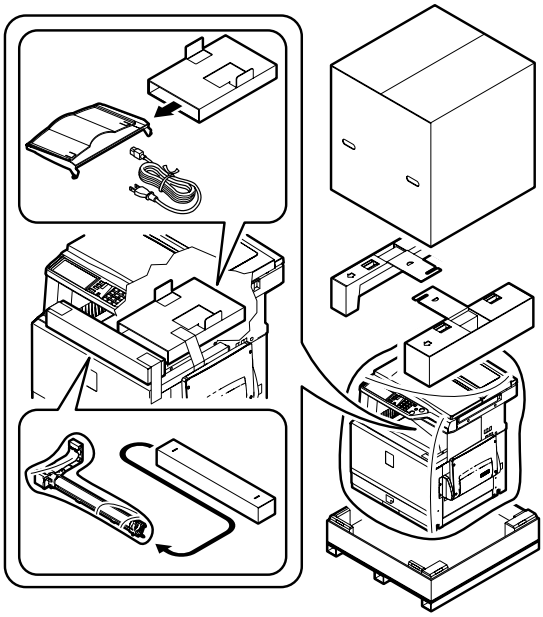

Fixing tape and protection pads removal

1) Remove the fixing tape and protection pads from the machine.

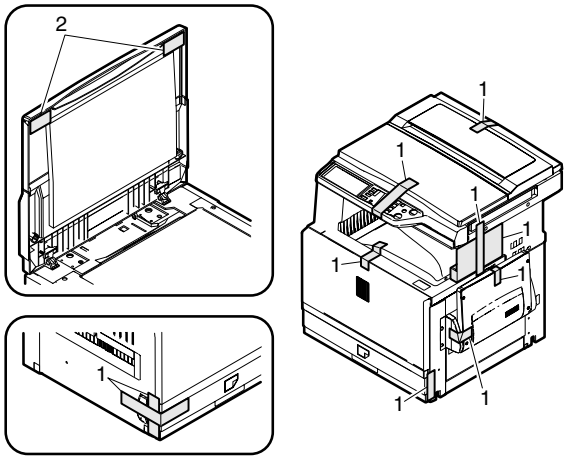

Note: The document cover may be supplied as a standard part in some destinations, and may be an option in some other destinations.

2) Open the left door, and remove the transfer fixing pads.

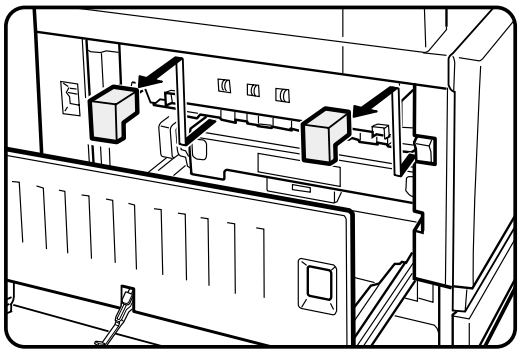

Actuator installation

1) Remove the actuator fixed to the left door.

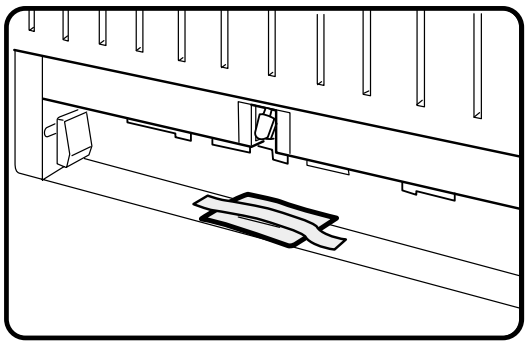

2) Install the actuator to the paper exit port of the left door.

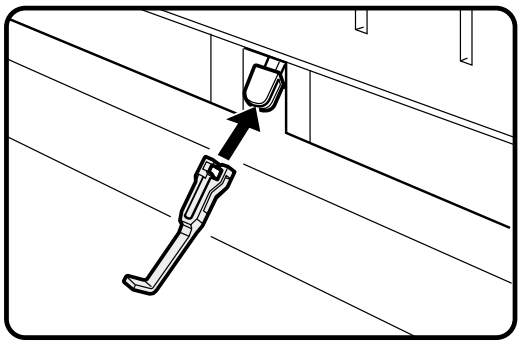

4. Lock release

A. Scanner (2/3 mirror unit) lock release

1) Remove the scanner fixing screw, and remove the caution label.

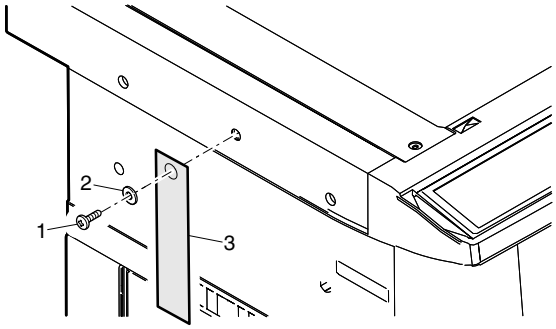

B. Main body cassette lock release

1) Pull out the main body cassette.
2) Remove the rotation plate fixing pad and remove the caution label.

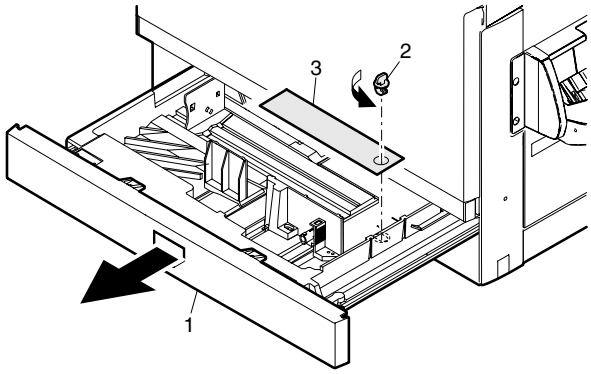

C. Transfer unit pressure release

1) Pull the knob and open the left door.

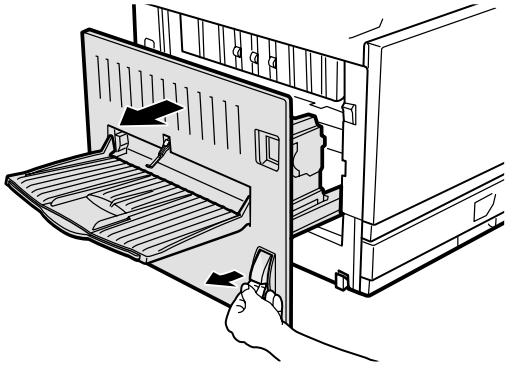

2) Loosen the roller knob (A), and remove the fusing unit (B).

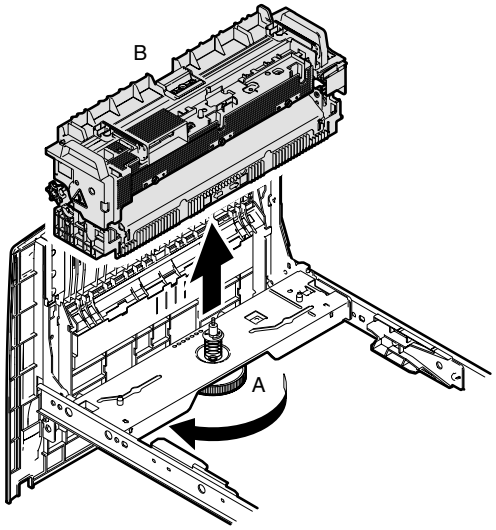

3) Hold section A of the transfer unit and pull it out so that the both sides of the transfer unit can be held.
4) Hold sections B and remove the transfer unit.

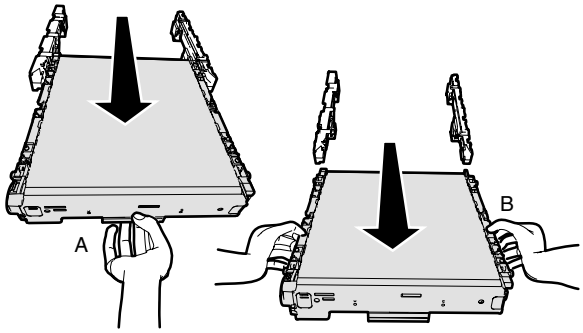

5) Remove the transfer belt protect sheet.

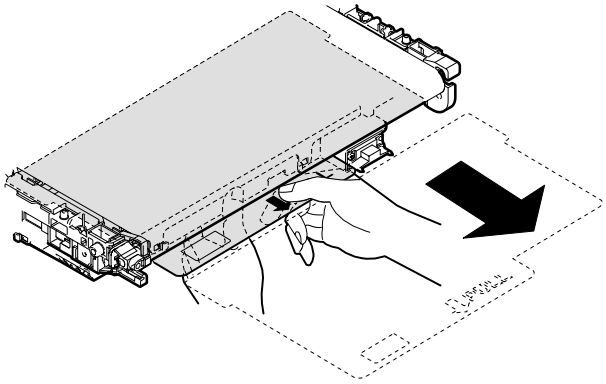

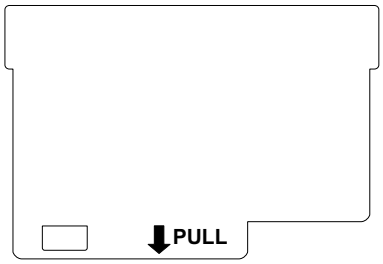

6) Remove the screw and apply a tension to the transfer belt.

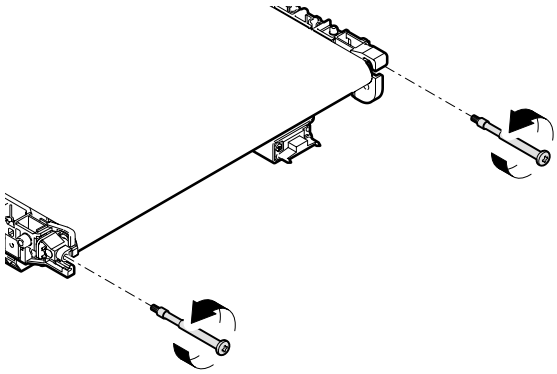

7) Install the transfer unit to the machine.

5. Fusing heat roller pressing (F/R)

1) Pull the knob and open the left door.

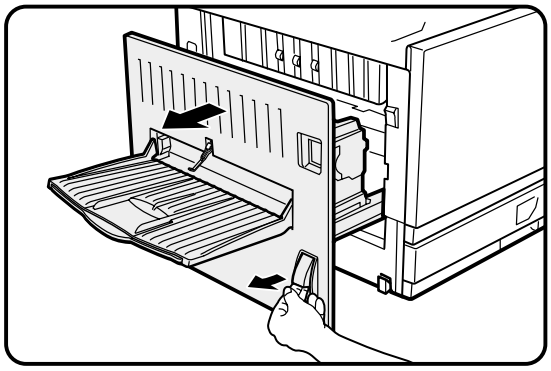

2) Turn the pressure release lever to press.

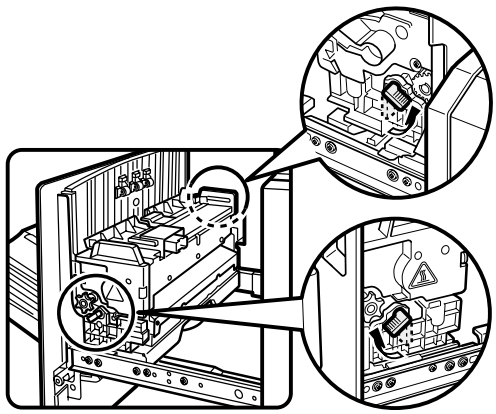

Note: If the machine is left for one month or more, the heat roller rubber may be deformed. In such a case, therefore, release the pressure.

6. Black drum cartridge insertion

1) Pull the knob and open the left door.
2) Open the front cover.

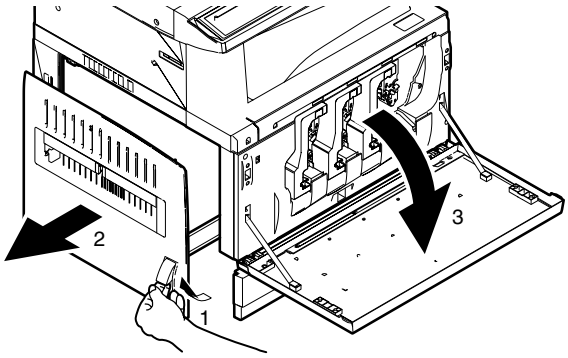

3) Insert the black drum cartridge, and fix it with a screw.

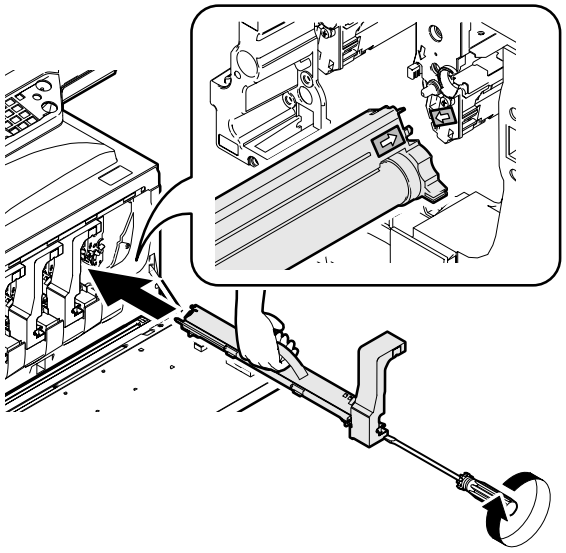

7. Paper exit tray installation

1) Install the paper exit tray to the left door.

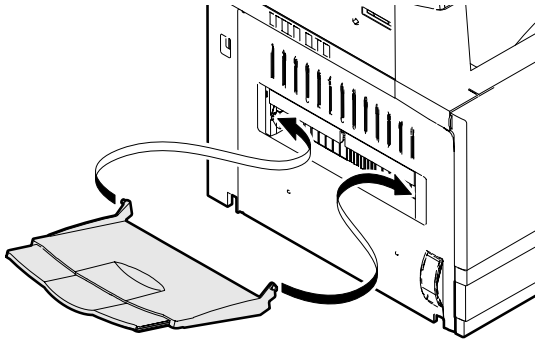

Note: The paper exit tray may be supplied as a standard part in some destinations, and may be an option in some other destinations.

8. Toner cartridges installation

1) Shake the toner cartridge horizontally several times.

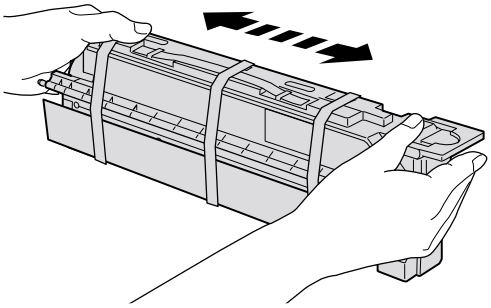

2) Remove the tape, and remove the protection pad.

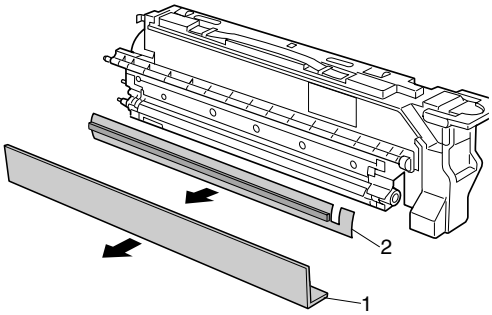

3) Open the front cover.
4) Insert the toner cartridge.
   * As shown below, fit the cartridge with the insertion port and push it in.

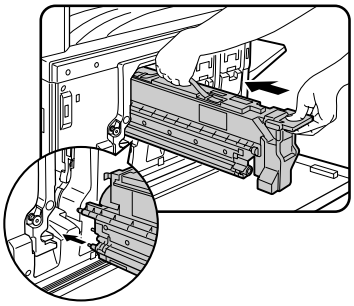

Note: Be sure to install the color cartridges to their proper positions. Avoid instillation to a different color position.
[Color toner cartridge positions]

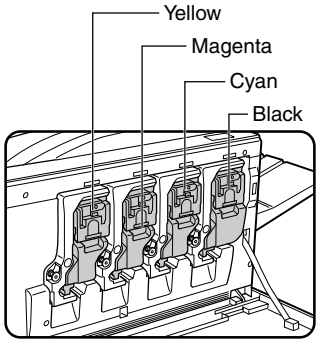

5) Insert the cartridge securely until it locks.

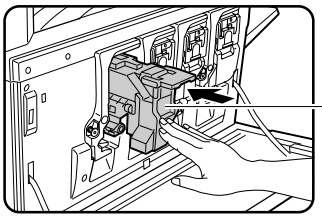

6) Return the cartridge lever to the original position.

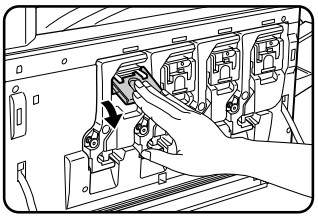

7) Close the front cover.

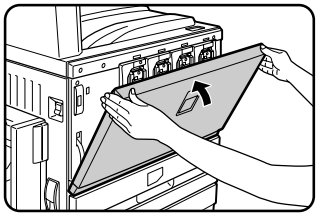

9. AC cord connection

1) Insert the AC power plug into the connector at the rear of the machine, and connect the other end to the power outlet.

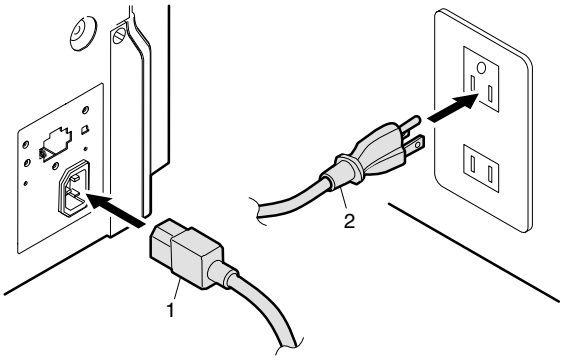

10. Machine power ON

1) Turn on the power switch on the left side of the machine.

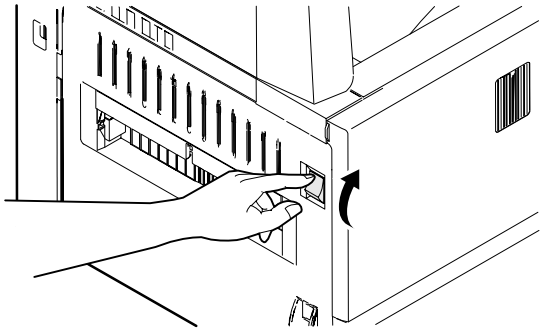

11. Specifications setup

Used to set the specifications with SIM26 according to the customer's request.

SIM No		Content
26	6	Used to set the destination.

To customize the following items after completion of the destination setup, change the set values.

SIM No		Content
26	2	Used to set the large capacity paper feed tray paper size.
		Used to set the detection paper size and display when using 8.5 x 13 size paper and document.
		Used to set the paper kind and the display form in the manual paper feed mode.
	3	Used to set the auditor specification mode.
	5	Used to set the count mode of the total counter and the maintenance counter.
	18	Used to set YES/NO of the toner save mode (Only in UK and Japan versions) For other destination versions, this setup is made by the user program.
	52	Used to set YES/NO of counting when non-print paper is passed through each counter.
	53	Used to set YES/NO of user calibration permission.
	65	Used to set the limit number of sheets for stapling.

On completion of the installation of the AR-F13 finisher, please change the default output tray of the machine to the top tray of the finisher.

12. Image quality check

Check the following items related to image quality. For details of the adjustment and checking procedures, refer to the chapter of adjustments.

1) Image focus, image skew (Refer to ADJ 3.)
2) Image registration (Refer to ADJ 4.)
3) Image loss, void area (Refer to ADJ 10.)
4) Copy color balance, density (Refer to ADJ 11.)

Check that the above items are normal. If not, make the adjustment.

13. Function and operation check

Check that the following operations are normal.

Check item		Installation	
Key input operation (Operation panel)			
Display (Operation panel)			
Paper feed operation	Manual paper feed		
	Machine paper tray		
	Desk unit paper feed tray	When the desk unit is installed.	
	Large capacity paper feed tray	When the large capacity paper feed tray is installed.	
Paper size detection operation			
Document size detection operation	Document table mode		
	RADF mode	When the RADF is installed.	
RADF operation/ Duplex copy operation	S-S mode	When the RADF is installed.	
	D-S mode	When the RADF is installed.	
	S-D mode	When the RADF is installed.	When the desk unit with the duplex unit is installed.
	D-D mode	When the RADF is installed.	When the desk unit with the duplex unit is installed.

Check item	Installation	
Bookbinding operation	When the finisher is installed.	
Stapling operation	When the finisher is installed.	
Grouping operation	When the finisher is installed.	When the sorter is installed.
Sorting operation	When the finisher is installed.	When the sorter is installed.

14. Setup and adjustment data recording

Print the various setup data and the adjustment data (list) with SIM22-6 and keep the data.

In case of a memory trouble, if the data are not kept, all the adjustments must be made again.

If the data are kept, the setup values and the adjustment values can be entered without adjustments, shortening the servicing time.

15. Necessary works before moving the machine

1) If the following options are installed, remove all of them from the machine.
   - Sorter
   - Finisher
   - Reverse unit
   - RADF unit
   - Desk unit
2) Remove the following consumable parts from the machine.
   - Paper
   - Toner cartridge
   - Photoconductor cartridge
3) Lock the following sections.
   - Scanner (Optical section)
   - Paper cassette lift plate

[6] EXTERNAL VIEW AND INTERNAL STRUCTURE

1. Name and function of each section

A. External view

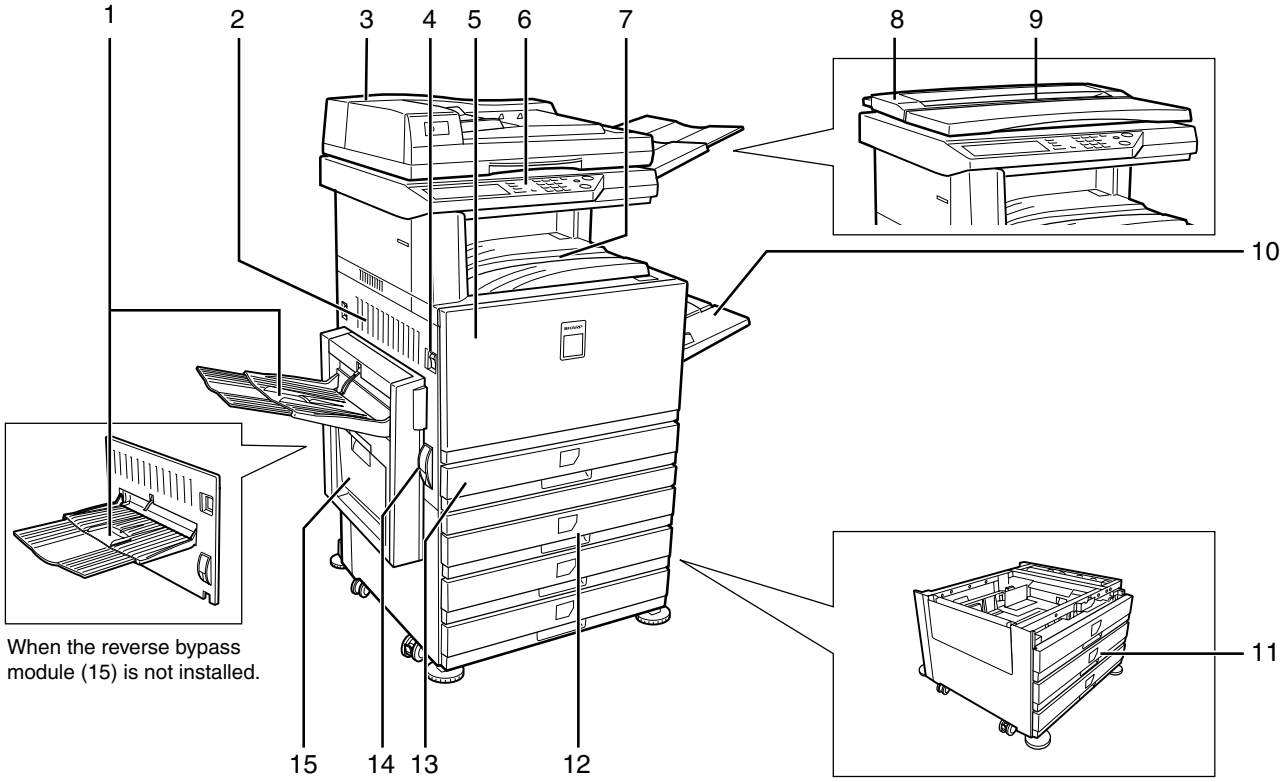

No.	Parts		Model	Note
	Name	Function		
1	Paper exit tray (Left tray)	Receives discharged paper.		
2	Left side cover	Opened to process a paper jam in the fusing unit or the transfer unit.		
3	Automatic duplex document feeder	Automatically feeds and transports sheet documents to be scanned. Supports duplex documents and scans the back surface as well as the front surface of a document. (Option)		
4	Main switch	Turns on/off the power source.		
5	Front cover	Opened to replace the toner cartridge.		
6	Operation panel	Performs various functions with the operation keys and the touch panel.		
7	Upper paper exit tray (Center tray)	Receives discharged paper.		
8	Document cover	Presses a document.		
9	Original stacker	Stacks documents.		
10	Manual feed tray	Used for manual paper feed.		
11	3-stage paper feed desk	Provided with the 3-stage trays for paper feed. Each tray holds about 500 sheets of the recommended color paper (80g/m² (21 lbs.)) or about 550 sheets of Sharp standard paper (64g/m² (17 lbs.)). (Option)		
12	2-stage duplex paper feed desk	Provided with the 2-stage duplex paper feed trays. Each tray holds about 500 sheets of the recommended color paper (80g/m² (21 lbs.)) or about 550 sheets of Sharp standard paper (64g/m² (17 lbs.)). For duplex paper exit, the reverse bypass module (AR-RB1) (15) is required. (Option)		
13	Tray	Holds about 500 sheets of the recommended color paper (80g/m² (21 lbs.)) or about 550 sheets of Sharp standard paper (64g/m² (17 lbs.)).		
14	Left side cover open/close knob	Push up this knob to open the left cover.		
15	Reverse bypass module	Reverses paper for automatic duplex paper exit. (Option)		

B. Internal structure

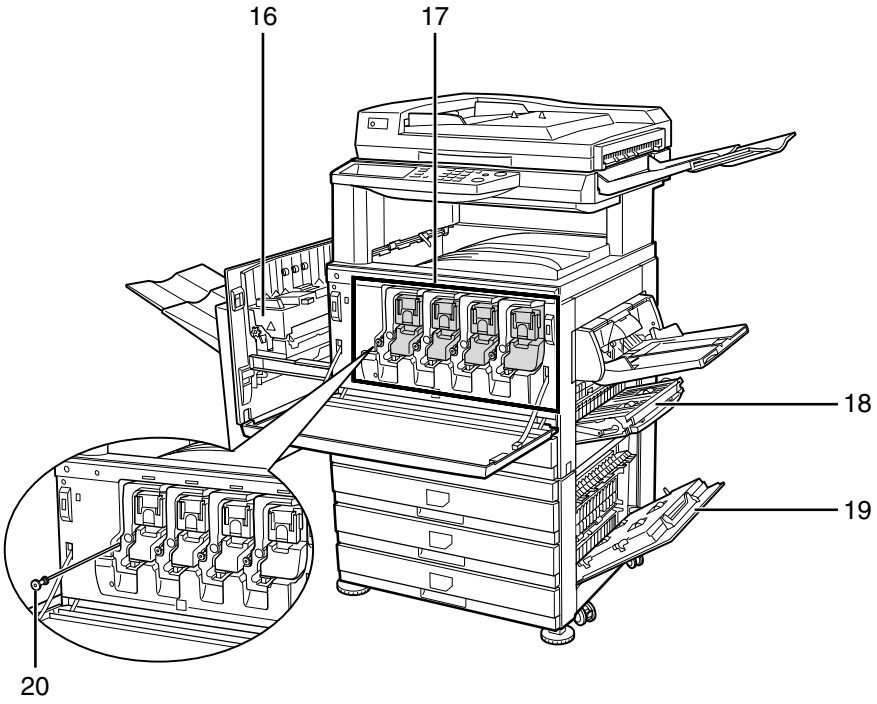

No.	Parts		Model	Note
	Name	Function		
16	Fusing section	Fuses transferred images on paper.		Note: Since the fusing section is heated to a high temperature, be careful not to burn your hands when processing a paper jam.
17	Toner cartridges	Toner is in this cartridge. When toner is empty, replace the empty cartridge with a new one.		
18	Right side cover	Opened to process a paper jam in the paper feed section.		
19	Paper feed desk right cover	Opened to process a paper jam in a peripheral unit.		
20	Cleaning lever	Use this level to clean the charger. Provided for each toner cartridge.		

C. Operation panel

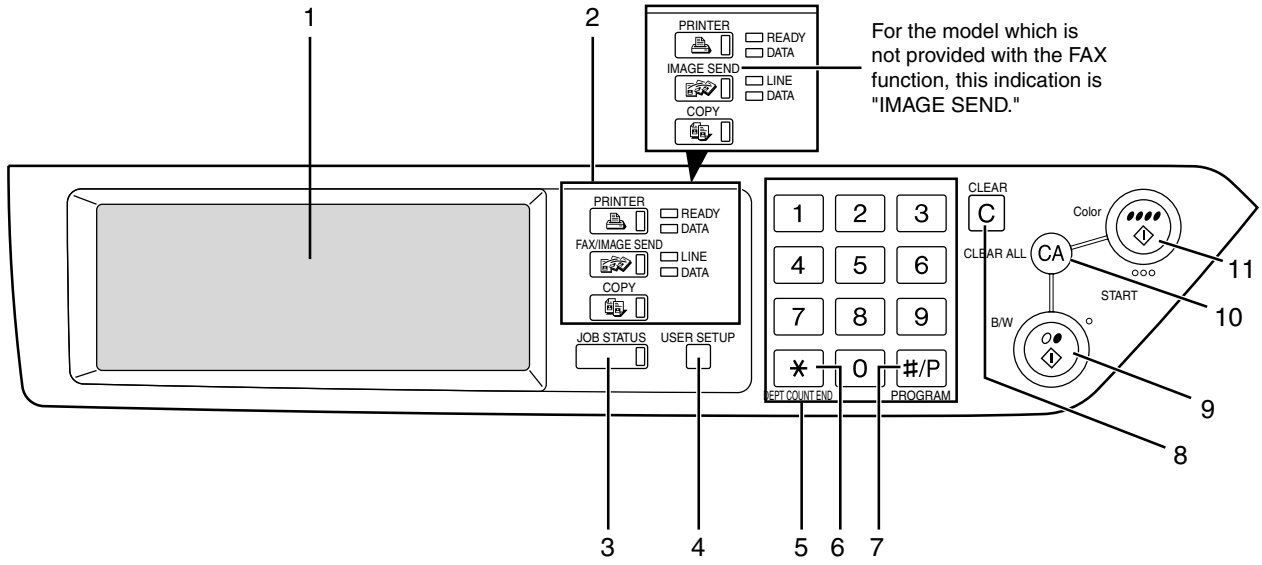

No.	Parts		Model	Note
	Name	Function		
1	Touch panel	Displays messages and keys. The display key can be directly touched to be operated. Provides selection of PRINTER/COPY/ NETWORK SCANNER/FAX mode.		
2	Mode select key/ Display lamp [PRINTER] key READY lamp DATA lamp [FAX/IMAGE SEND] key *1 Communication lamp Data lamp	Switches the display mode of the touch panel. [PRINTER] key: Set to the printer mode. • READY lamp: ON when reception of print data is allowed. • DATA lamp: On or flashing during printing or receiving print data. Switches the network scanner (when expanded)/ FAX mode (AR-C250F only).		
	[COPY] key	Switches to the copy mode.		
3	[JOB STATUS] key	Displays the current job status.		
4	[USER SETUP] key	Used to adjust contrast of the touch panel and set the key operator program.		
5	10-key pad	Used to input figures for various setups.		
6	[*] key ([DEPT COUNT END] key)	Used in the copy function and the FAX function.		
7	[#/P] key ([PROGRAM] key)	Used when dialing in the copy function and the FAX function.		
8	[C] key (Clear key)	Used in the copy function and the FAX function.		
9	B/W [START] key	Used during outputting B/W copy in the copy function, during scanning B/W images in the network scanner function, and during scanning a send document in the FAX function.		
10	[CA] key ([ALL CANCEL] key)	Used in the copy function and the FAX function.		
11	Color [START] key	Used during outputting a full-color or single-color copy in the copy function and during scanning color images in the network scanner function.		

*1: For the AR-C250S, [IMAGE SEND] key.

D. Job status display

The job status display is shown by pressing the [JOB STATUS] key on the operation panel.
The list of jobs which are reserved, being executed, or completed is displayed to allow checking the job contents or to delete (terminate) jobs.

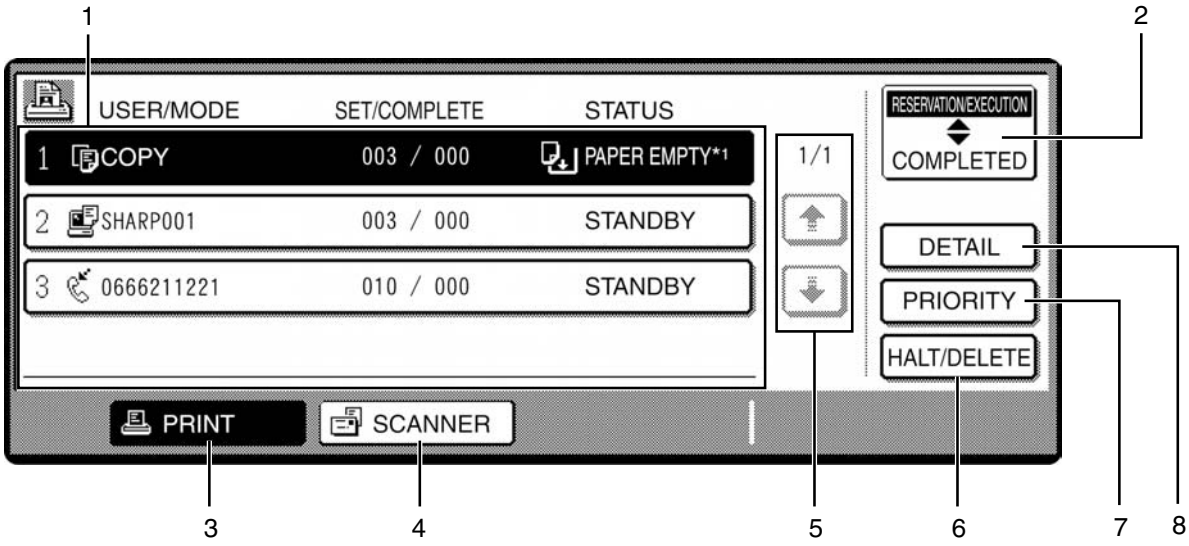

* The above example shows the job list of reservation and execution.

No.	Display of inside of touch panel		Model	Note
	Name	Function		
1	Job list	Displays the list of reservation and execution. Tough the key (3), (4) or (5) to select the mode and display the job list. The icon in front of each job name indicates the job mode. Copy mode Printer mode Network scanner mode FAX mode (Send job) FAX mode (Receive job) When the job list of reservation and execution is displayed, each job on the list serves as a key. To terminate the output, touch the job key to select the job and press [HALT/DELETE] key (6) ([PRIORITY] key (7)).		* Paper empty of status display If the status display is in paper empty, the specified size paper is exhausted. (Need to be supplied.) To print on another size paper already set, touch and select the job and touch the detail key (8) to change the size.
2	Mode select key	This key is displayed only in the job status display in the FAX mode, and is used to switch the job list display to the [RESERVATION/EXECUTION] job or the [COMPLETED] job. [RESERVATION/EXECUTION] job: Displays the list of reserved or executing jobs. [COMPLETED] job: Displays the list of completed jobs.		
3	[PRINT] key	Displays the list of the output jobs in all the modes (printer, copy, and FAX).		
4	[SCANNER] key	Displays only the jobs of the network scanner function. * When the network scanner function is optionally expanded.		
5	Display select key	Switches the page of displayed job list.		
6	[HALT/DELETE] key	Halts or deletes a job which is being executed or a reserved job. * Halt/delete during execution cannot be made.		
7	[PRIORITY] key	This key is valid only in the job status display in the FAX mode. Touch and select the reserved FAX job to set the highest priority on the job.		
8	[DETAIL] key	This key is displayed only on the job status display in the print mode. It is valid only for a print job from PC. The details of the selected job are displayed. Also used to change the specified output paper.		

E. Cross section

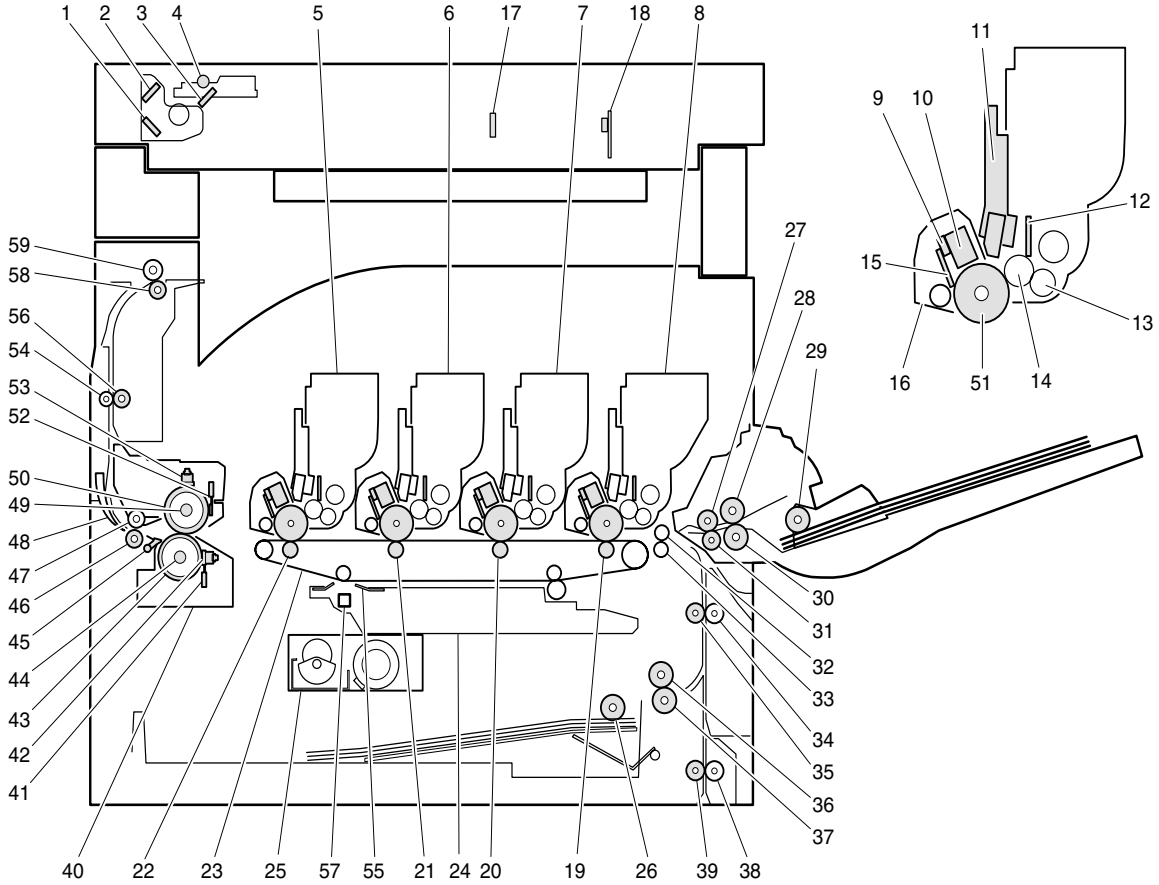

No.	Parts		Model	Note
	Name	Function		
1	No. 3 mirror	Leads a document image to the CCD.		
2	No. 2 mirror	Leads a document image to No. 3 mirror.		
3	No. 1 mirror	Leads a document image to No. 2 mirror.		
4	Scanner lamp	Radiates light on a document for the CCD to scan the document image.		
5	Yellow toner cartridge	Attaches yellow toner to electrostatic latent images on the photoconductor.		
6	Magenta toner cartridge	Attaches magenta toner to electrostatic latent images on the photoconductor.		
7	Cyan toner cartridge	Attaches cyan toner to electrostatic latent images on the photoconductor.		
8	Black toner cartridge	Attaches black toner to electrostatic latent images on the photoconductor.		
9	Discharge lamp	Discharges the photoconductor.		
10	Main charger unit	Charges the magenta photoconductor negatively.		
11	LED unit	Converts the color component image signal sent from the ICU PWB into LED light, and radiate it to the OPC drum.		
12	Doctor blade	Regulates the toner quantity on the developing roller.		
13	Supply roller	Supplies toner to the developing roller.		
14	Developing roller	Attaches toner to the photoconductor.		
15	Cleaning blade	Cleans residual toner from the photoconductor.		
16	OPC drum unit	Forms electro-static latent images.		
17	CCD lens	Reduces document images (light) and projects it to the CCD.		
18	CCD PWB	Reads document images (photo signals) and converts them into electrical signals.		
19	Transfer roller (K)	Applies the transfer voltage to the transfer belt.		
20	Transfer roller (C)	Applies the transfer voltage to the transfer belt.		
21	Transfer roller (M)	Applies the transfer voltage to the transfer belt.		
22	Transfer roller (Y)	Applies the transfer voltage to the transfer belt.		

No.	Parts		Model	Note
	Name	Function		
23	Transfer belt	Transfers toner images of the photoconductor onto paper.		
24	Waste toner box (Transfer section)	Collects waste toner on the transfer belt.		
25	Lift-up unit	Lifts the transfer belt.		
26	Paper pickup roller (No. 1 tray)	Sends paper to the paper feed roller.		
27	Idle roller	Applies a pressure to paper and the transport roller to provide transport power of the transport roller to paper.		
28	Manual paper feed roller	Feed paper to the paper transport section.		
29	Paper pickup roller	Sends paper to the paper feed roller.		Manual paper feed section
30	Separation roller	Separates paper to prevent double feed.		
31	Manual paper transport roller	Transports paper to the resist roller.		
32	Upper resist roller	Transports paper to the transfer section.		
33	Lower resist roller	Transports paper to the transfer section.		
34	Idle roller	Prevents paper skew.		
35	Paper transport roller 1	Transports paper to the resist roller.		
36	Paper feed roller (No. 1 tray)	Feed paper to the paper transport section.		
37	Separation roller (No. 1 tray)	Separates paper to prevent double feed.		
38	Idle roller	Applies a pressure to paper and the transport roller to provide transport power of the transport roller to paper.		
39	Paper transport roller 2	Transports paper to the transport roller 1.		
40	Fusing unit	Fuses toner on paper.		
41	Lower heat roller thermistor	Detects the temperature on the fuser roller surface.		
42	Lower heat roller thermostat	Detects an abnormally high temperature and turns off the heater lamp.		
43	Lower heat roller	Heats and presses toner on paper to fuse toner on paper.		
44	Lower heater lamp	Heats the lower fuser roller.		
45	Lower separation pawl	Mechanically separates paper which was not separated naturally from the lower heat roller.		
46	Fusing transport roller	Transports paper after fusing.		
47	Idle roller	Applies a pressure to paper and the transport roller to provide transport power of the transport roller to paper.		
48	Gate	Switches the paper exit path. (face up, face down)		
49	Upper heater lamp	Heats the heat roller.		
50	Upper heat roller	Heats and presses toner on paper to fuse toner on paper.		
51	OPC drum	Forms latent static electrostatic images with LED light.		
52	Upper heat roller thermistor	Detects the temperature on the heat roller surface.		
53	Upper heat roller thermostat	Detects an abnormally high temperature and turns off the heater lamp.		
54	Idle roller	Applies a pressure to paper and the transport roller to provide transport power of the transport roller to paper.		
55	Transfer belt cleaning blade	Cleans toner on the transfer belt.		
56	Paper transport roller 3	Transport paper to the paper exit roller.		
57	Belt waste toner transport shaft	Transports waste toner on the transfer belt to the waste toner box.		
58	Paper exit roller	Discharges paper to outside of the machine.		
59	Idle roller	Applies a pressure to paper and the transport roller to provide transport power of the transport roller to paper.		

F. Motors, clutches, solenoids, fans

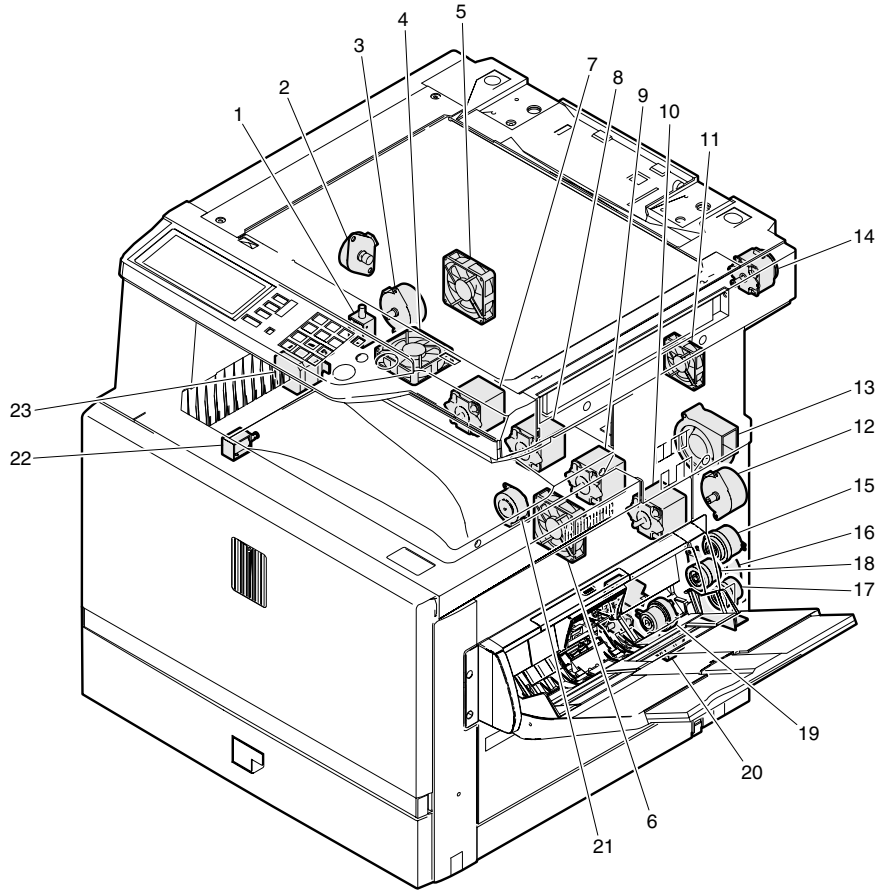

No.	Parts		Code, signal name	Type
	Name	Function		
1	Exit select gate solenoid	Drives the exit path select gate.	GSS	Electromagnetic solenoid
2	Offset motor (Slide motor)	Drives the paper exit offset.	OSM	Stepping motor
3	Fusing drive motor	Drives the fusing unit.	FUSM	Stepping motor
4	Exhaust fan motor 1	Exhaust and cools the fusing section.	VFMP	DC motor
5	Exhaust fan motor 2	Exhaust and cools the fusing section.	VFMS	DC motor
6	Power unit cooling fan motor	Cools the power unit.	PSFM	DC motor
7	Drum motor (Y)	Drives the yellow photoconductor unit.	DM_Y	Stepping motor
8	Drum motor (M)	Drives the magenta photoconductor unit.	DM_M	Stepping motor
9	Drum motor (C)	Drives the cyan photoconductor unit.	DM_C	Stepping motor
10	Drum motor (K)	Drives the black photoconductor unit.	DM_K	Stepping motor
11	Printer controller cooling fan motor	Cools the printer controller.		
12	PS motor	Drives and turns ON/OFF the resist roller.	PSM	Stepping motor
13	Process cooling fan motor	Exhaust and cools the process section.	PCFM	DC motor
14	Scanner motor	Drives the scanner unit.	SM	Stepping motor
15	PS front clutch	Transmits power of the paper feed motor to the manual paper feed unit. (Controls ON/OFF.)	MTRC	Electromagnetic clutch
16	Paper feed motor	Drives the paper feed section and the paper transport section.	PFM	DC servo motor
17	Paper feed clutch	Transmits power of the paper feed motor to each transport roller. (Controls ON/OFF.)	TRC	Electromagnetic clutch
18	Manual paper feed clutch	Controls ON/OFF of the manual paper feed roller. Presses the paper pickup roller to paper.	MPFC	Electromagnetic clutch
19	Paper feed drive clutch	Controls ON/OFF of the paper feed roller.	CPFC1	Electromagnetic clutch
20	No. 1 cassette lift-up motor	Drives the lift plate.	LUM1	Synchronous motor
21	Belt lift-up motor	Lifts the transfer belt unit.	BLUM	Stepping motor
22	Calibration plate open/ close solenoid	Switches the image density sensor.	CALS	Electromagnetic solenoid
23	Transfer belt motor	Drives the transfer belt.	BTM	Stepping motor

G. Sensors, switches and heaters

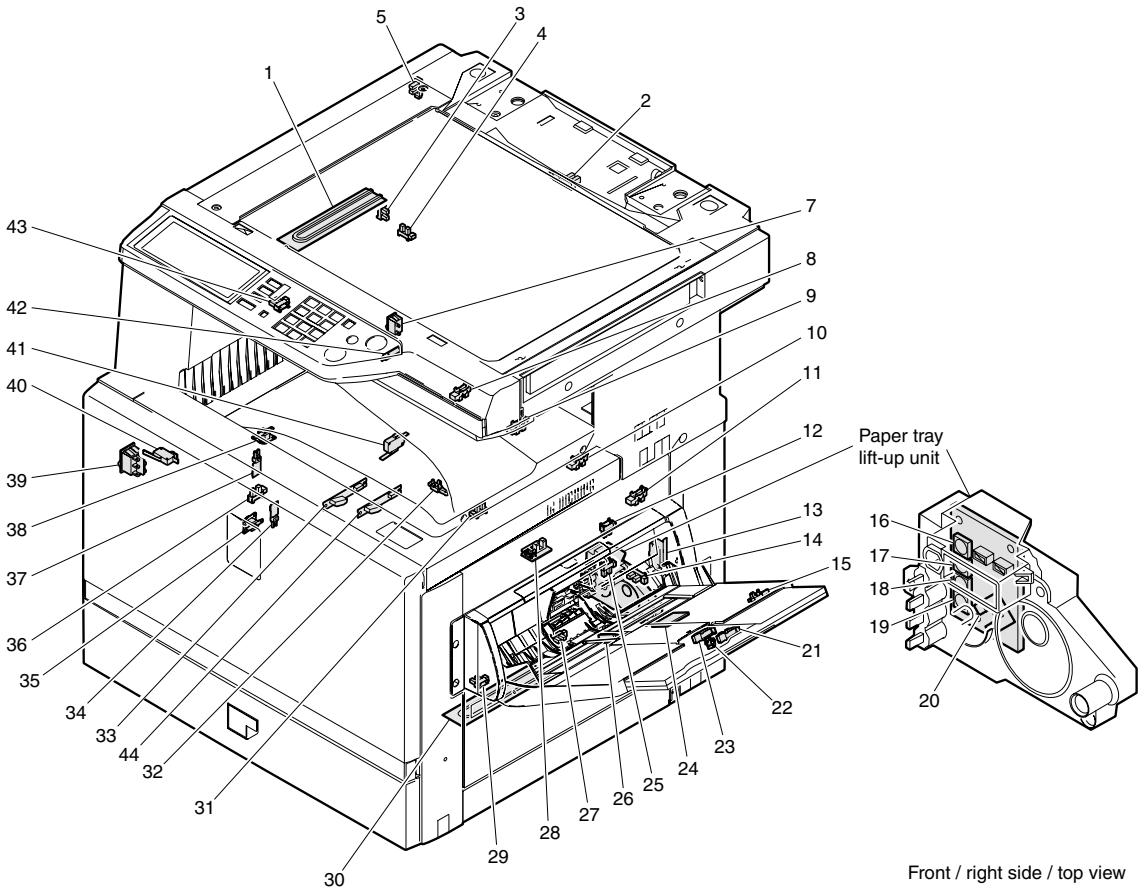

No.	Parts		Code, signal name	Type
	Name	Function		
1	Dehumidifier heater	Dehumidifies the scanner section.	DH (Japan only)	
2	O/C open/close sensor	Detects open/close of the document cover. (A timing signal of document size detection is produced.)	OCSW	Photo sensor (Photo transmission)
3	Offset home position sensor	Detects the offset home position.	HPOS	Photo sensor (Photo transmission)
4	Paper exit tray full detection	Detects full of the face down paper exit tray.	TFD2	Photo sensor (Photo transmission)
5	Mirror home position sensor	Detects the scanner home position.	MHPS	Photo sensor (Photo transmission)
7	Dehumidifier heater switch	Turns ON/OFF the dehumidifier heater installed in the scanner (reading) section and the paper feed section.	DHSW (Japan only)	—
8	Toner empty sensor (Y)	Detects toner empty (Y).	TES_Y	Photo sensor (Photo transmission)
9	Toner empty sensor (M)	Detects toner empty (M).	TES_M	Photo sensor (Photo transmission)
10	Toner empty sensor (C)	Detects toner empty (C).	TES_C	Photo sensor (Photo transmission)
11	Toner empty sensor (K)	Detects toner empty (K).	TES_K	Photo sensor (Photo transmission)
12	No. 1 paper transport sensor	Detects paper in front of the resist roller.	PPD1	Photo sensor (Photo transmission)
13	Paper feed door open detection	Detects open/close of the paper feed door.	DSWR	Micro switch
14	Manual feed paper empty detection	Detects paper empty on the paper tray.	MPED	Photo sensor (Photo transmission)
15	Manual feed tray pulling out detection 2	Detects the paper tray position.	MTOP2	Contact switch
16	No. 1 cassette paper size detection 1	Detects the paper size set by the paper size set blocks.	C1SS1	Contact switch
17	No. 1 cassette paper size detection 2	Detects the paper size set by the paper size set blocks.	C1SS2	Contact switch
18	No. 1 cassette paper size detection 3	Detects the paper size set by the paper size set blocks.	C1SS3	Contact switch
19	No. 1 cassette paper size detection 4	Detects the paper size set by the paper size set blocks.	C1SS4	Contact switch
20	No. 1 cassette lift-up position detection 1	Detects the lift plate position. (Detects the paper quantity.)	C1PD1	Photo sensor (Photo transmission)
21	Manual feed paper length detection 2	Detects the paper length.	MPLD2	Photo sensor (Photo transmission)
22	Manual feed tray pulling out detection 1	Detects the paper tray position.	MTOP1	Contact switch

No.	Parts		Code, signal name	Type
	Name	Function		
23	Manual feed paper length detection 1	Detects the paper length.	MPLD1	Photo sensor (Photo transmission)
24	Humidity sensor	Detects the ambient humidity.	HUD	—
25	No. 1 cassette paper feed detection	Detects paper exit from No. 1 paper tray.	PFD1	Photo sensor (Photo transmission)
26	Manual feed paper width detection	Detects the paper width.	MPWS	Volume (Variable resistor)
27	No. 1 cassette lift-up upper limit detection	Detects the upper limit position of paper.	LUD1	Photo sensor (Photo transmission)
28	PS front sensor	Detects paper in front of PS.	PPD2	Photo sensor (Photo transmission)
29	No. 1 cassette paper empty detection	Detects paper empty on the paper tray.	PED1	Photo sensor (Photo transmission)
30	Dehumidifier heater	Dehumidifier hater for the main body cassette. (Japan only)	DH	—
31	Belt lift-up upper limit detection	Detects lift-up or lift-down of the transfer belt.	BLUD	Photo sensor (Photo transmission)
32	Belt waste toner full detection	Detects belt waste toner full.	BTNF	Contact switch
33	Color toner concentration (process control) sensor/Auto image Reg.	Detects the toner patch density (color toner) in image density correction operation. 2-sensors on PWB.	PCS_C	Photo sensor (Photo transmission)
34	Lower heat roller thermistor	Detects the temperature on the heat roller surface.	THSD	Thermistor
35	Lower heat roller thermostat	Detects an abnormally high temperature and turns off the heater lamp.	HLTS2	Thermostat Thermal switch
36	Machine paper exit sensor 1	Detects discharged paper.	POD1	Photo sensor (Photo transmission)
37	Upper heat roller thermistor	Detects the temperature on the heat roller surface.	THSU	Thermistor
38	Upper heat roller thermostat	Detects an abnormally high temperature and turns off the heater lamp.	HLTS1	Thermostat Thermal switch
39	Main switch	Turns ON/OFF the main power.	MSW	Seesaw switch
40	Front door open detection	Detects open/close of the front door.	DSWF	Micro switch
41	Paper exit door open detection	Detects open/close of the paper exit door.	DSWL	Micro switch
42	Face-up paper exit tray full detection	Detects full of the face-up paper exit tray.	TFD	Photo sensor (Photo transmission)
43	Machine paper exit sensor 2	Detects discharged paper.	POD2	Photo sensor (Photo transmission)
44	Black toner concentration sensor	Detects black patch density for toner concentration	PCS_B	—

H. PWB 1

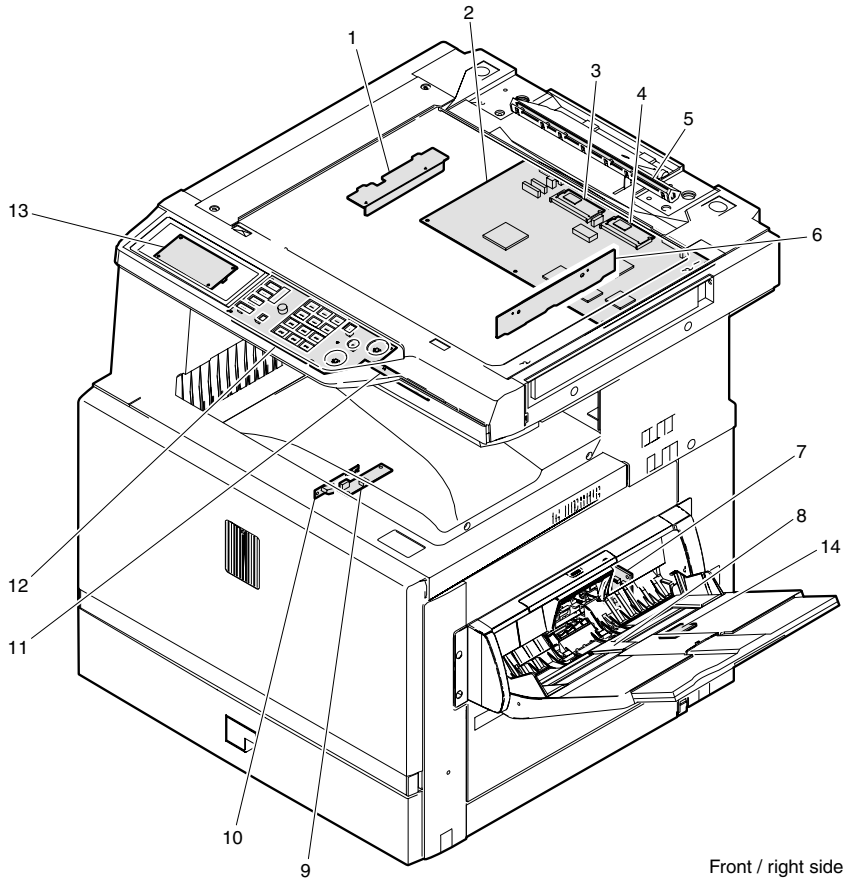

Front / right side / top view

No.	Parts		Code, signal name	Type
	Name	Function		
1	CL inverter PWB	Drives the xenon lamp.		
2	MFP PWB	Corrects images from the CCD and controls the operation panel.		
3	Flash PWB (OP)	Includes the program to drive the OP PWB.		
4	Flash PWB (MFP)	Includes the program to drive the MFP PWB.		
5	Document detection LED PWB	Emits light for document size detection.		
6	CCD PWB	Converts document images into electric signals.		
7	Lift-up unit PWB tray	Detects the cassette size and interfaces the cassette lift-up motor signals.		
8	Manual feed VR PWB	Outputs manual feed width signals.		
9	Process control PWB (for black)	Outputs the black toner density on the transfer belt.		
10	Process control PB (for color)	Outputs the color toner density on the transfer belt.		
11	Document detection light receiving PWB	Outputs the document size detection signal.		
12	Operation PWB	Outputs the key operation signal.		
13	INV/LVDS PWB	Interfaces LCD from the MFPPWB and the touch panel signal, and drives the LCD backlight.		
14	Temp sensor PWB	Temp/humidity sensor readings.		

H. PWB2

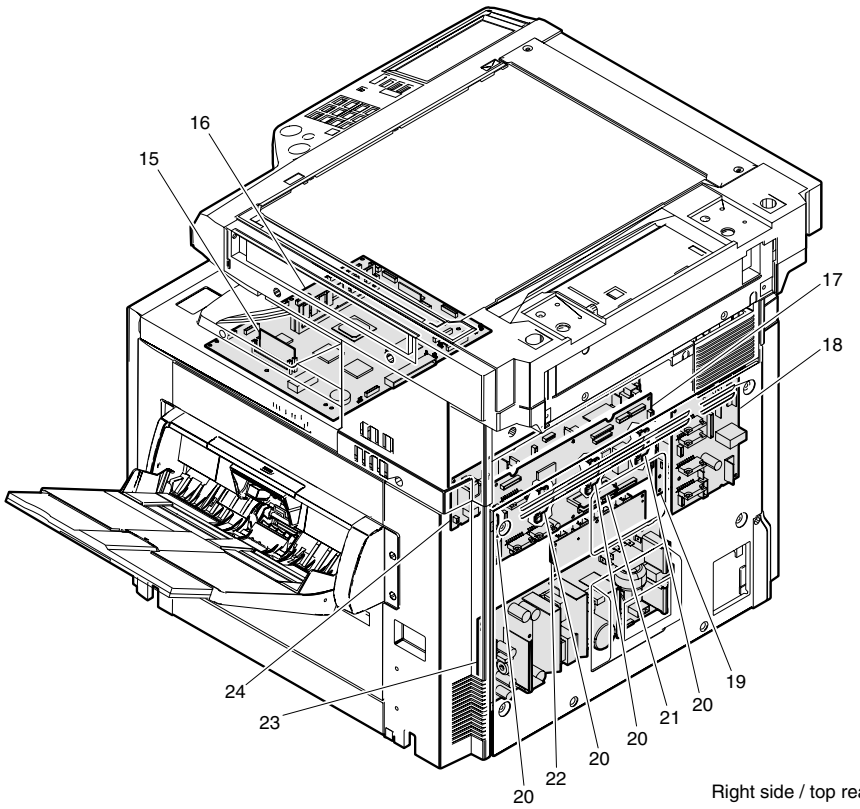

Right side / top rear / view

No.	Parts		Code, signal name	Type
	Name	Function		
15	Flash PWB (ICU)	Includes the program to drive the ICU PWB.		
16	ICU PWB	Performs image process and controls LED.		
17	PCU PWB	Controls the engine section.		
18	Driver PWB	Controls the DC load power and drive the motor.		
19	AC power PWB	Controls the power on the primary side.		
20	LED DL PWBs	Discharges electric charges on the OPC drums.		
21	Flash PWB (PCU)	Includes the program to drive the PCU PWB.		
22	High voltage TC PWB	Produces the transfer voltage.		
23	DC power PWB	Outputs the voltage on the secondary side, and controls the heater lamp.		
24	High voltage MC PWB	Produces a high voltage for the main charger and the developing bias voltage.		

[7] DESCRIPTIONS OF EACH SECTION

1. Fusing section

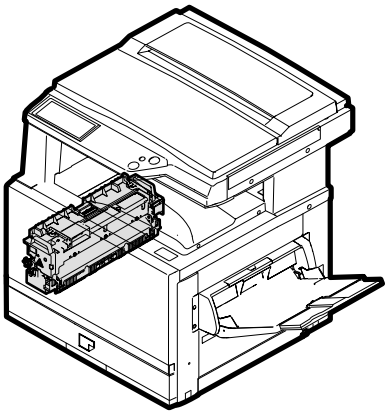

A. Operational descriptions

(1) Outline

This section performs the following function and operation.

1) Toner attached to paper in the transport section is fused onto paper by heat and pressure of the heat roller.

(2) Electrical section

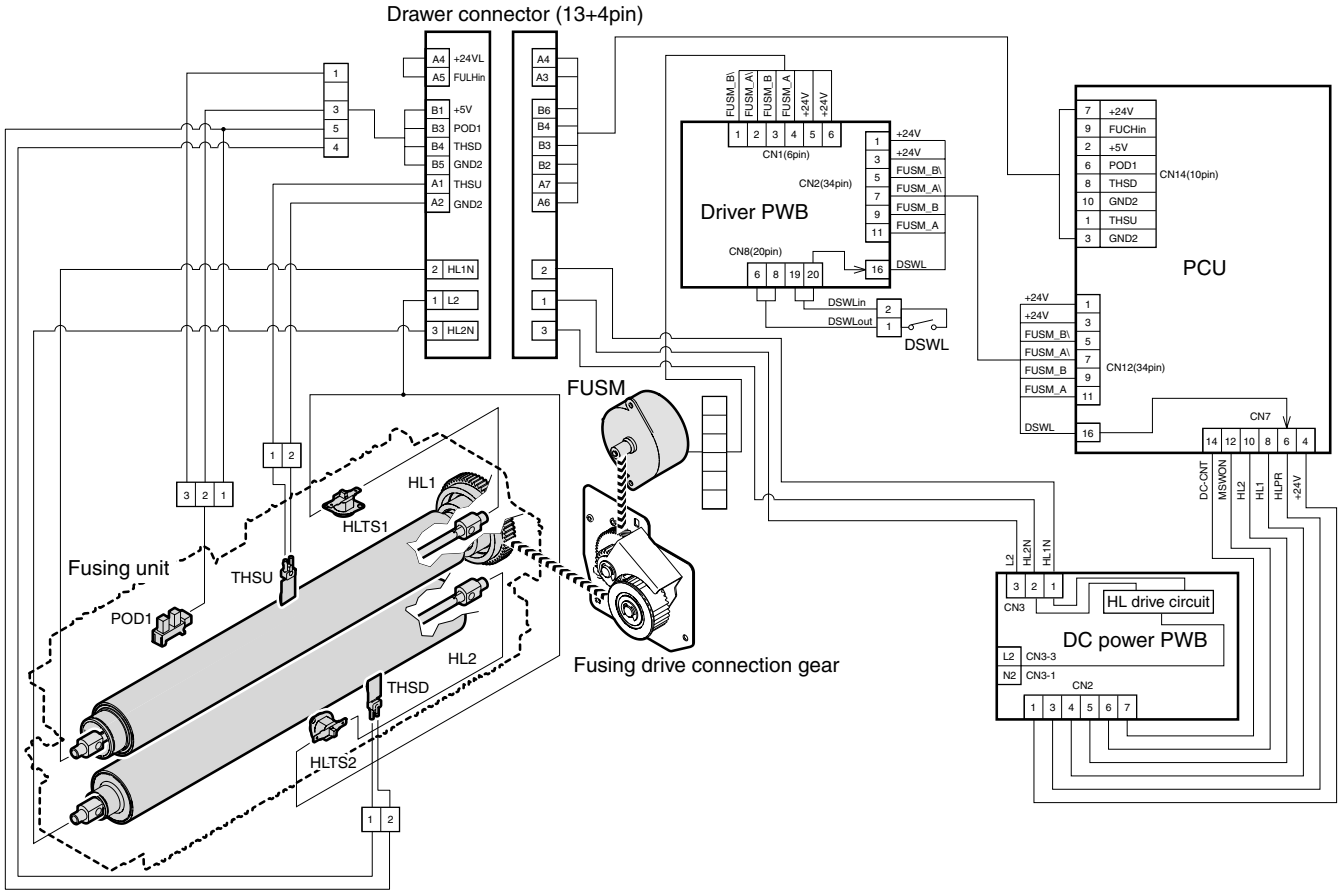

(3) Major parts/signals functions and operations

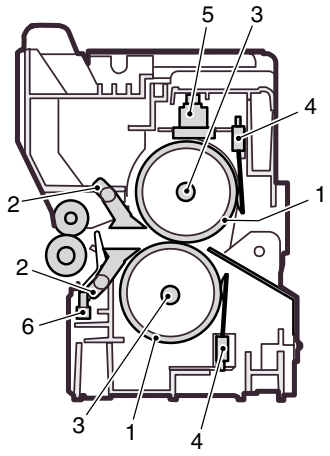

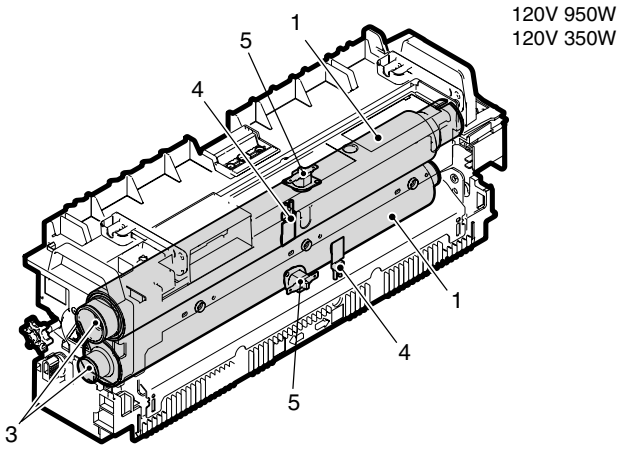

No.	Name	Code, Signal name	Function
1	Heat roller	—	Heats and presses toner to fuse it on paper. Silicon rubber rollers are used as the upper and the lower heat rollers. Teflon tube is wound around the upper heat roller.
2	Upper/lower separation pawls	—	Mechanically separate paper from the heat roller, which was not separated naturally.
3	Heater lamp	Upper: HL1, Lower: HL2	Heats the heat rollers.
4	Thermistor	Upper: THSU, Lower: THSD	Detects the surface temperature of the heat roller. (Keeps the roller surface temperature at a constant level.)
5	Thermostat	Upper: HLTS1, Lower: HLTS2	Cuts conduction of the heater lamp when an abnormally high temperature is detected.
6	Paper exit sensor	POD1	Detects paper discharged from the fusing section.
RW	Control signal	FUSM_A, A', B, B'	Drives the fusing section.
RW	Control signal	FUCHin	Fusing unit installation detecting signal
RW	Control signal	DSWL	Left cabinet open/close detection signal
RW	Control signal	HLPR	Heater lamp power relay (in the DC power PWB) drive signal

RW: Abbreviation of Related Wiring, which means the said load is specified in the related figure of the mechanical and the electrical sections.

(4) Operational descriptions

a. Fusing unit drive

To drive the fusing unit, drive power is transmitted from the drive motor (FUSM) through the connection gear to the upper heat roller gear.

The drive motor (stepping motor) is driven by the motor drive IC in the driver PWB according to the control signal sent from the PCU.

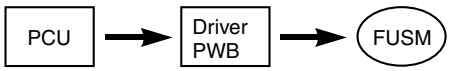

b. Heater lamp drive

The surface temperature detected by the thermistor is sent to the PCU. When the temperature is lower than the specified level, the PCU sends the heater lamp lighting signal to the heater lamp drive circuit in the DC power PWB.

The triac in the heater lamp drive circuit is turned on to apply AC power to the heater lamp, which turns on to heat the heat rollers.

The thermostats are provided as a safety measure to prevent against an abnormally high temperature of the heat rollers.

When the thermostat is opened, the power supply (AC neutral) to the heater lamp is cut off.

c. Fusing operation

Color toner of YMCK on paper is heated and pressed by the heat rollers to be fused on paper.

At that time, color toner of YMCK is mixed to reproduce nearly actual colors of document images.

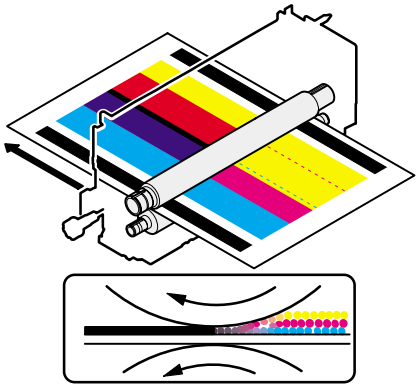

The upper and the lower heat rollers are provided to heat from above and below. This is because it is necessary to heat four layers of toner from above and below and right and left to fuse it on paper.

The upper and lower heat rollers are of silicon rubber. This is because of the following reasons:

1) To provide a greater nip quantity and a higher heating capacity for paper.
2) The soft, flexible rollers press multi-layer toner without deformation to fuse on paper.
3) An even pressure is applied to an uneven surface of multi-layer toner.

d. Fusing temperature control

The temperature sensor is provided at the center of the upper and the lower heat rollers.

The temperature sensor at the center detects the heat roller temperature and controls the heater lamp to keep the fusing temperature at the specified level.

The fusing temperature is switched according to the machine condition and paper type selected.

	Upper heat roller		Lower heat roller
Ready state	170°C		120°C
Power save mode	143°C		OFF
Print mode	Normal paper	175°C	140°C
	OHP sheet	170°C	155°C
	Heavy paper 1	175°C	136°C
	Heavy paper 2	175°C	145°C
	Envelope	180°C	145°C

B. Disassembly/Assembly/Maintenance

(1) Fusing section maintenance target parts

×: Check (Clean, replace, or adjust as necessary.) ❍: Clean ▲: Replace ∆: Adjust ☆: Lubricate ❑: Shift position

Unit name	No.	Part name	When calling	50K	100K	150K	200K	250K	300K	350K	400K	Remark
Fusing section	1	Upper heat roller	×	×	▲	×	▲	×	▲	×	▲	Replace at 100K or within 2 years.
	2	Lower heat roller	×	×	▲	×	▲	×	▲	×	▲	Replace at 100K or within 2 years.
	3	Heat roller gear	×	×	▲	×	▲	×	▲	×	▲	
	4	Heat roller bearing	×	×	▲	×	▲	×	▲	×	▲	
	5	Separation pawl	×	×	▲	×	▲	×	▲	×	▲	
	6	Thermistor	×	×	▲	×	▲	×	▲	×	▲	
	—	Bearings	×	×	×	×	×	×	×	×	×	
	7	Gears	×	☆	☆	☆	☆	☆	☆	☆	☆	
	8	Paper guides	❍	❍	❍	❍	❍	❍	❍	❍	❍	
	9	Paper exit roller	×	×	×	×	×	×	×	×	×	
	—	Fusing unit		×	▲	×	▲	×	▲	×	▲	Replace the unit at 100K or within 2 years.

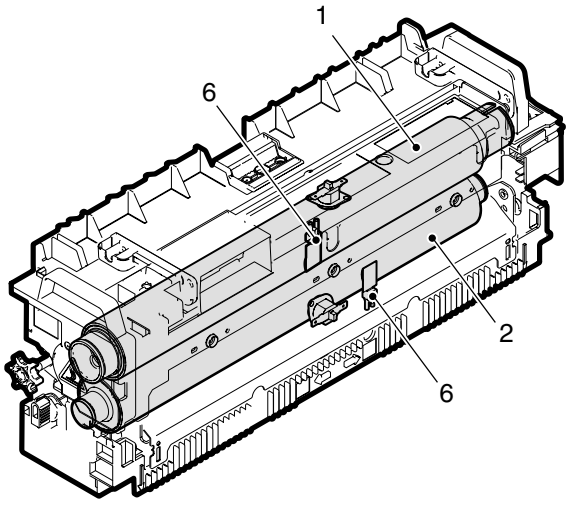

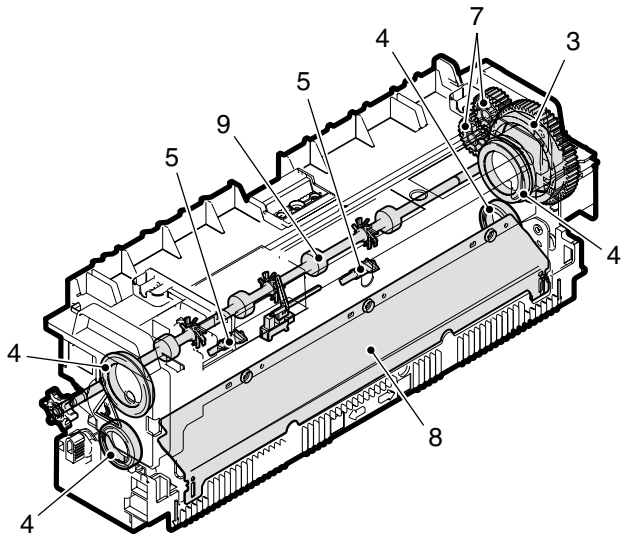

(2) Maintenance parts replacement procedure

a. Fusing unit removal

1) Open the left cabinet.

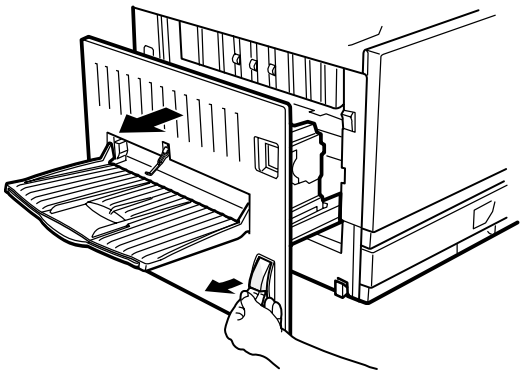

2) Loosen the roller knob (A) and remove the fusing unit (B).

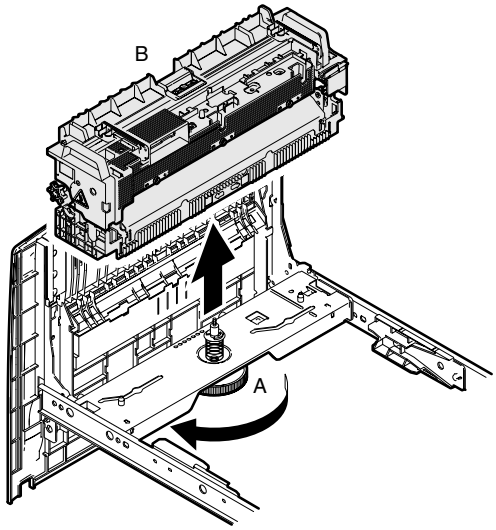

b. Upper thermistor

1) Remove the fusing until from the machine.
2) Remove the screw and the harness cover (A).
3) Remove the connector, the screw, and the harness, and remove the thermistor (B).

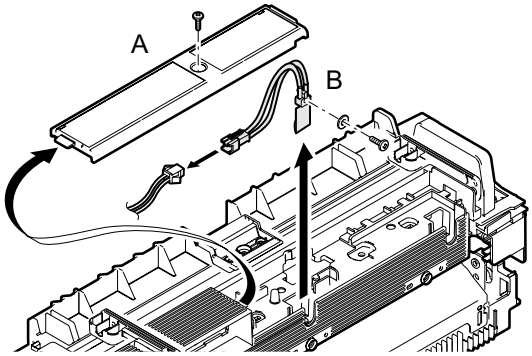

c. Lower thermistor

1) Remove the fusing unit from the machine.
2) Remove the screws, and remove the fusing front PG (A).
3) Remove the connector, the screw, and the harness, and remove the thermistor (B).

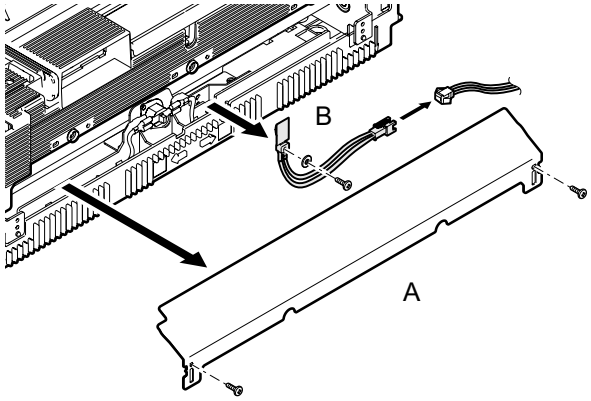

d. Upper heater lamp

1) Remove the fusing unit from the machine.
2) Remove the screw and remove the fusing front cover (A). Remove the harness cover (B).
3) Remove the connector, the screw, and the lamp holder (C), and remove the upper heater lamp.

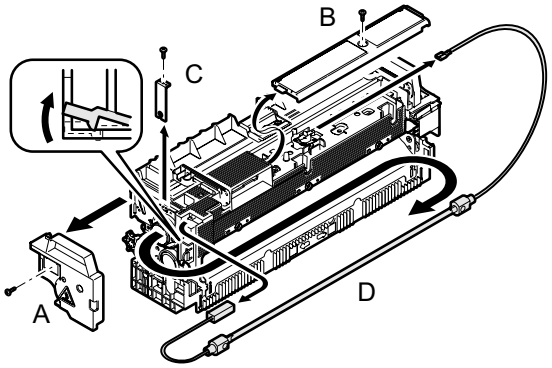

e. Lower heater lamp

1) Remove the fusing unit from the machine.
2) Remove the screw, and remove the fusing front cover (A).
3) Remove the screw, and remove the fusing front PG (B).
4) Remove the connector, the screw, and the lamp holder (C), and remove the lower heater lamp.

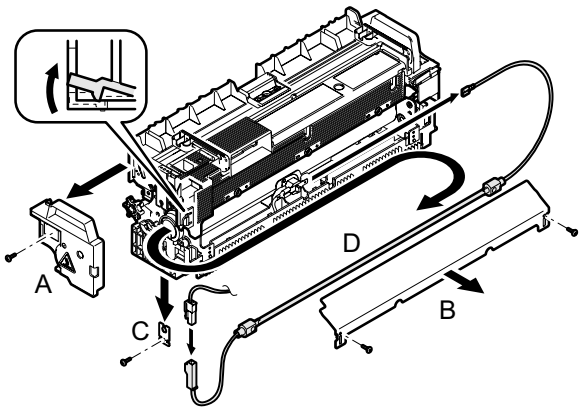

f. Upper heat roller, bearing, gear

1) Remove the fusing unit from the machine.
2) Remove the lever (A), and release the roller pressure.
3) Remove the screw.

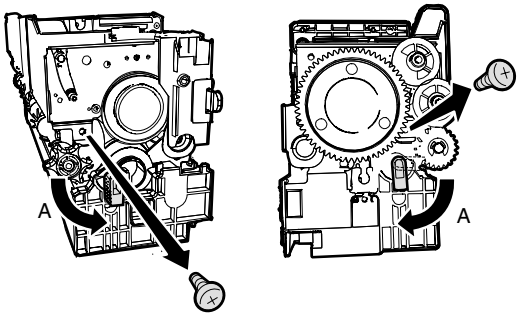

4) Open the upper fusing section.

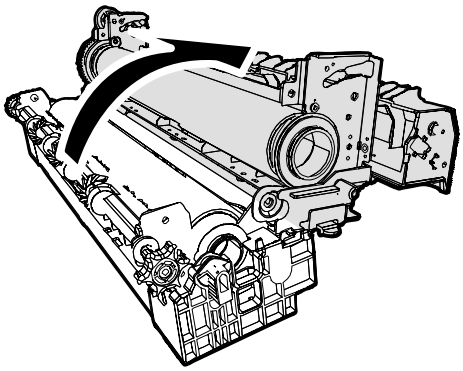

5) Remove the heat roller upper unit (B).

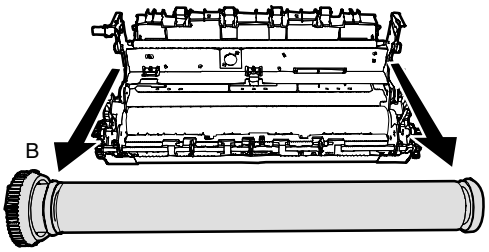

* When assembling, put the flanges of the upper bearings outside of the frames F and R.

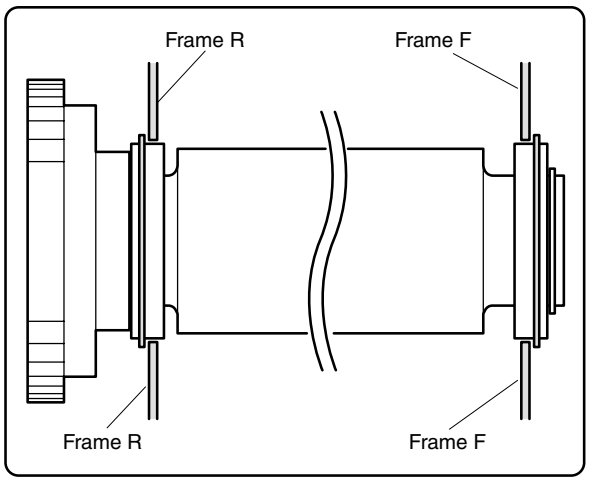

6) Remove the C-ring and the bearing, and remove the gear (A) and the heat roller (B).

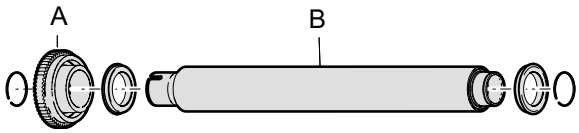

g. Lower heat roller, bearing

1) Remove the fusing unit from the machine.
2) Remove the screw, and open the upper fusing section.
3) Remove the lower heat roller unit (B).

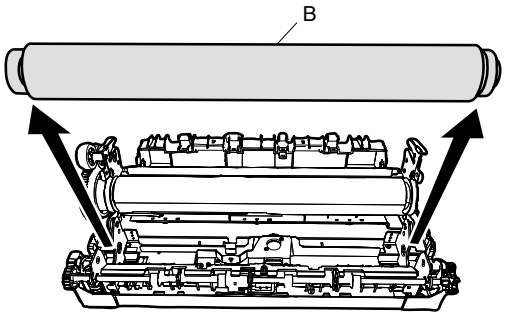

4) Remove the C-ring and the bearing (A), and remove the heat roller (B).

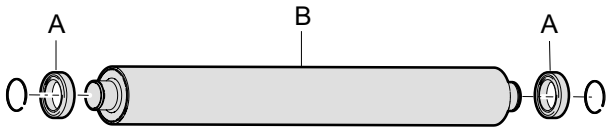

h. Paper guide

1) Remove the fusing unit from the machine.
2) Remove the screw, and remove the paper guide.

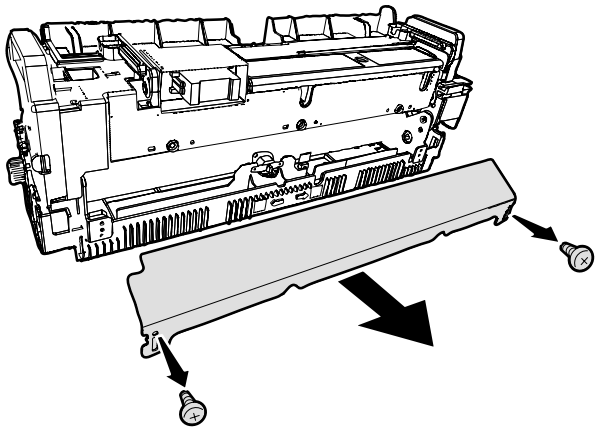

Note: Refer to the adjustment (ADJ13) when installing the paper guide.

i. Paper exit roller

1) Remove the fusing unit from the machine.
2) Open the upper fusing section.
3) Remove the E-ring (A), and shift the bearing (B).
4) Remove the paper exit roller unit (C).

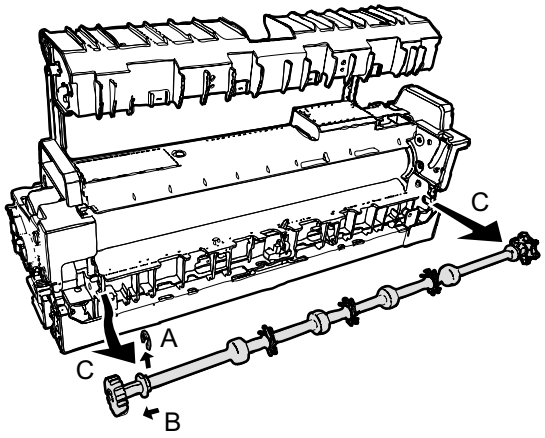

5) Remove the E-ring, the gear, the pin, and the bearing.

j. Lower separation pawl

1) Remove the fusing unit from the machine.
2) Open the upper fusing section.
3) Remove the paper exit roller unit.
4) Lift the separation pawl and shift it to the right and lift it from the heat roller.

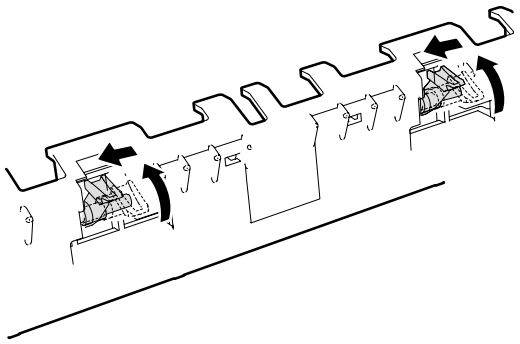

5) Remove the POD1 connector.
6) Remove the screw, and slide and remove the lower separation pawl mounting plate.

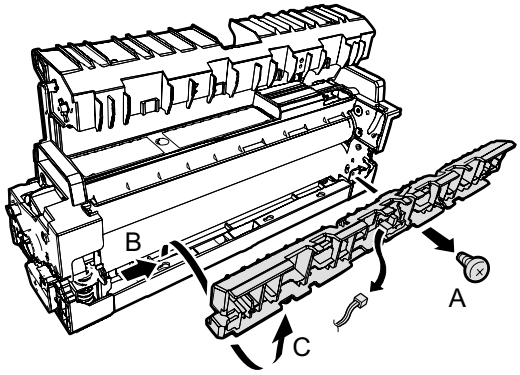

7) Rotate the separation pawl in direction A and remove if from the mounting plate. Remove the spring.

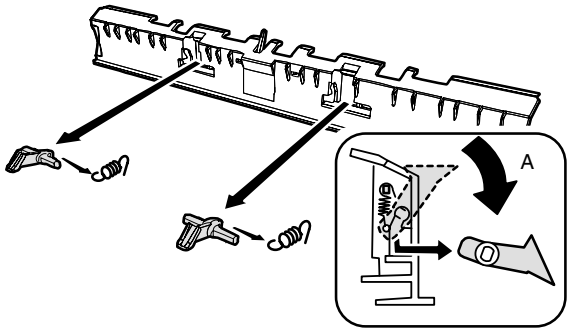

Note: When attaching the separation pawl, check that the separation pawl is in contact with the heat roller.

2. Transfer section

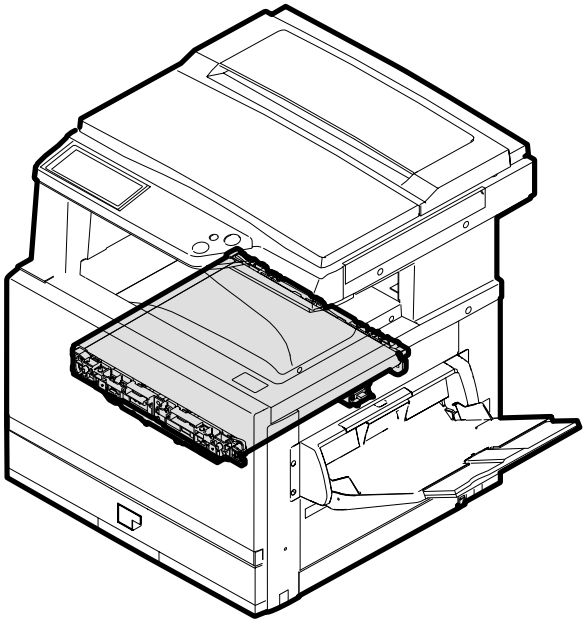

A. Operational descriptions

(1) Outline

This section functions and operates as follows:

1) A high, positive voltage is applied to the transfer roller to charge the transfer belt and paper on it positively, attracting negatively charged toner images on the OPC drum onto paper.

(2) Electrical and mechanical sections

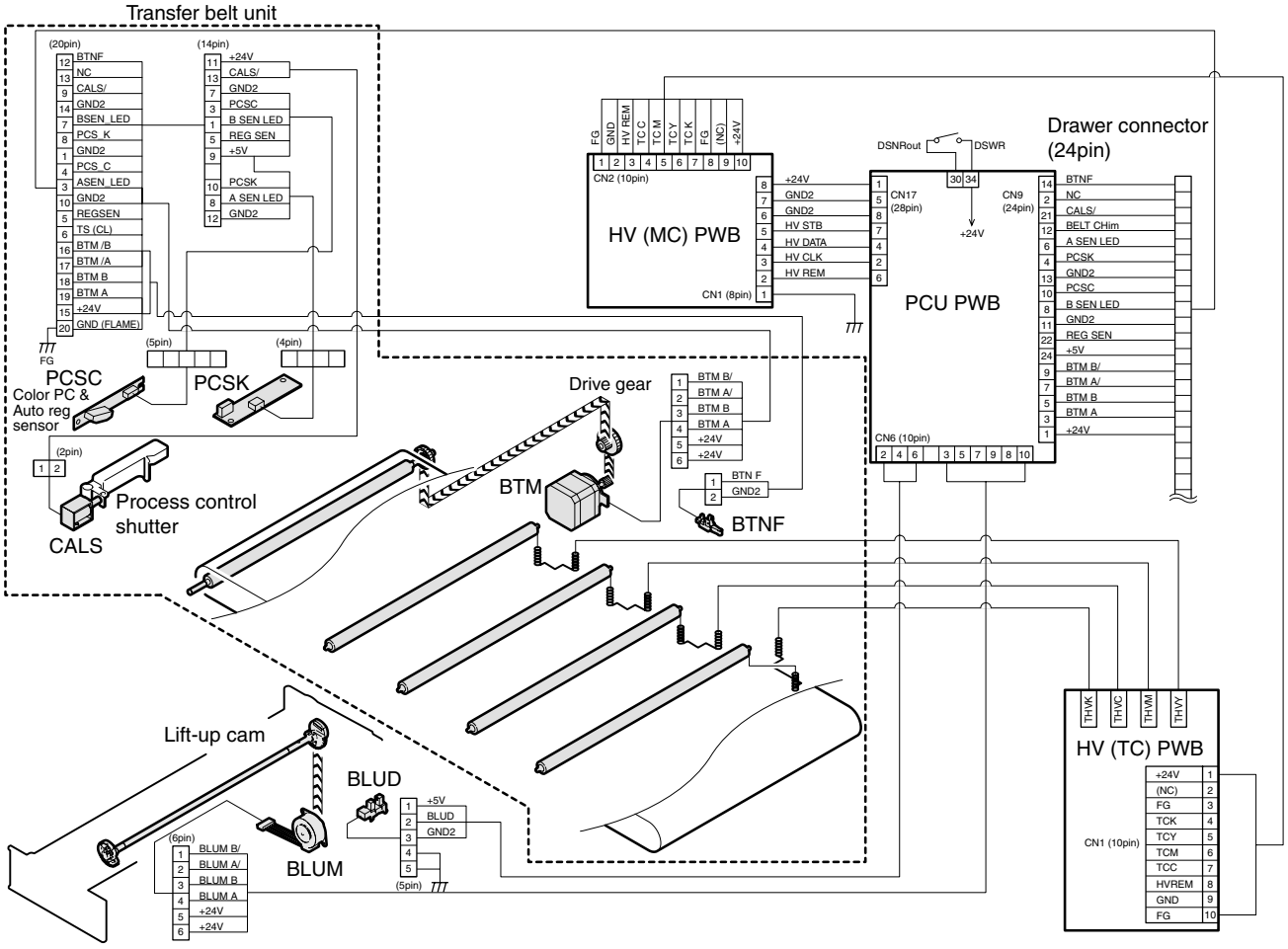

(3) Major parts/signals functions and operations

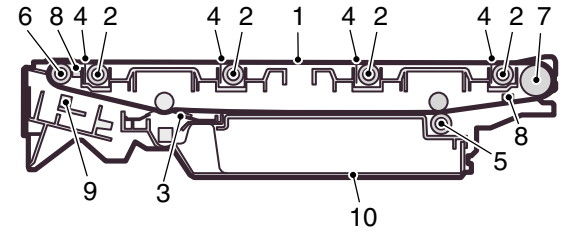

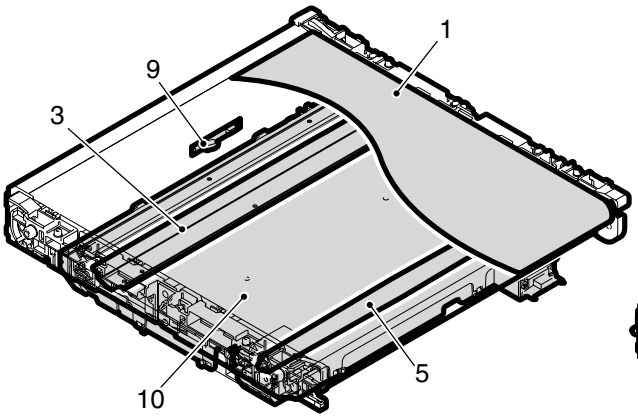

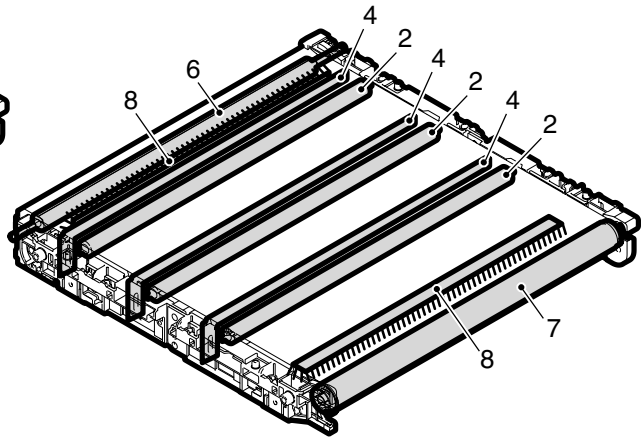

No.	Name	Code, signal name	Function
1	Transfer belt	—	Transfers toner images on the OPC drum onto paper.
2	Transfer roller	—	Applies a transfer voltage to the transfer belt.
3	Belt cleaning blade	—	Cleans and removes toner from the transfer belt.
4	Transfer discharge sheet	—	Discharges the transfer belt.
5	Transfer belt cleaning roller	—	Removes paper dust from the transfer belt.
6	Transfer belt drive roller	—	Drives the transfer belt.
7	Transfer belt follower roller	—	Transfer drive follower roller
8	Transfer belt cleaning brush	—	Cleans the back surface of the transfer belt.
9	Process control sensor	Monochrome: PCSK Color: PCSC	Detects the toner patch density in image density correction.
10	Transfer waste toner tank	—	Collects waste toner on the transfer belt.
RW	Belt motor	BTM	Drives the transfer belt.
RW	Calibration solenoid	CALS	Drives the shutter on the process control sensor.
RW	Waste toner full detection switch	BTNF	Detects waste toner full in the waste toner box.
RW	Belt lift-up motor	BLUM	Lifts up the transfer belt unit.
RW	Belt lift-up sensor	BLUD	Detects the position of the transfer belt unit.
RW	Control signal	TC (K, C, M, Y)	Each color transfer high voltage control signal
RW	Control signal	THV (K, C, M, Y)	Each color transfer high voltage

RW: Abbreviation of Related Wiring, which means the said load is specified in the related figure of the mechanical and the electrical sections.

(4) Operational descriptions

a. Transfer belt drive

The transfer belt drive power is transmitted from the drive motor (BTM) to the transfer drive roller.

The motor (stepping motor) is driven by the drive signal sent from the PCU.

b. Applying a transfer high voltage to the transfer roller

According to the high voltage control signal from the PCU, the signal is converted into a transfer high voltage control signal with the HV (MC) PWB, and sent to the HV (TC) PWB.

According to each color transfer high voltage control signal, a high voltage is applied to each transfer roller from the transfer high voltage HV (TC) PWB through the connection spring to each transfer roller.

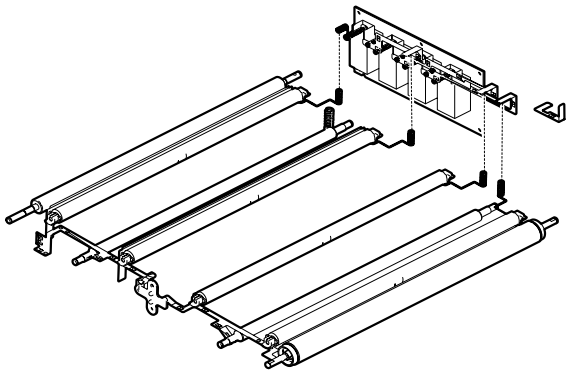

c. Process control sensor control

The process control shutter is provided on the process control sensor of monochrome (PCSK) and color (PCSC). When the shutter is open (in image density correction and automatic registration), the toner patch formed on the transfer belt is read by the process control sensor, and its information is sent to the PCU.

When the shutter is closed, the calibration sheet is read to perform calibration of the sensor itself.

The shutter operation is controlled by the calibration solenoid (CALS).

d. Belt waste toner full detection

Toner scraped by the belt cleaning blade is transported to the waste toner box by the belt waste toner transport shaft.

When the waste toner box is full, the rotation load of the waste toner transport shaft increases to turn on the waste toner full detection switch with the lever by the torque limiter function.

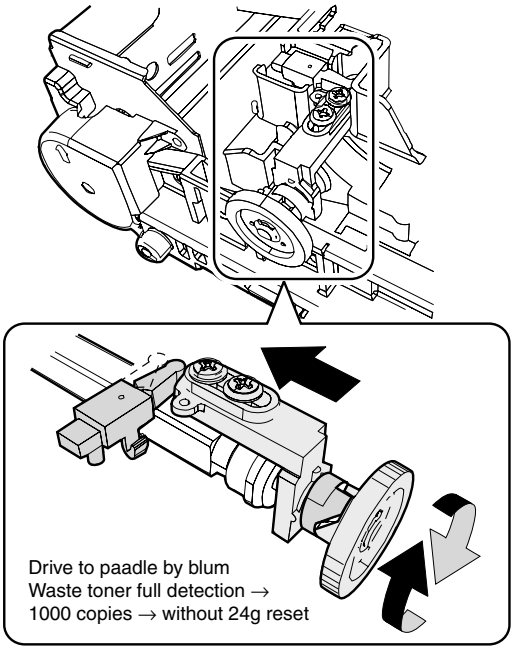

e. Transfer belt unit up and down

In color print, the transfer belt is in contact with four OPC drums. In black and white print, the transfer belt unit moves down so that only the black OPC drum is in contact with the transfer belt.

This up-and-down movement of the transfer belt is performed by the lift-up motor (BLUM), the lift-up cam, and the unit position sensor (BLUD).

When the left cabinet is opened for jam process, the rotating mechanism of the lift-up unit separates all four OPC drums from the transfer belt.

- Transfer belt position for color print
  The four OPC drums are in contact with the transfer belt by rotation of the cam in the transfer lift-up unit.

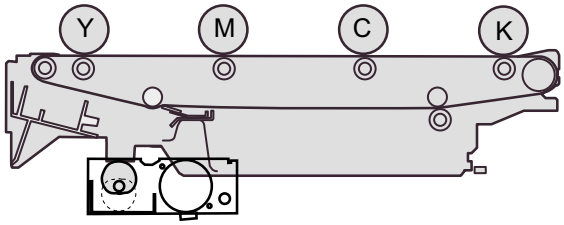

- Transfer belt position for black print
  Only the black OPC drum is in contact with the transfer belt by rotation of the cam in the transfer lift-up unit.

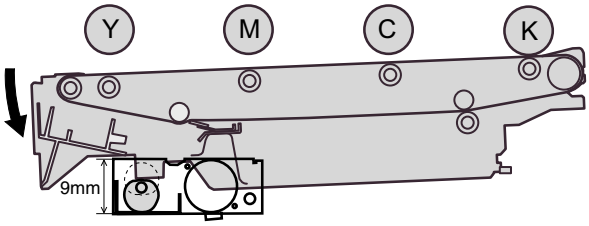

- Transfer belt position in jam process or replacement of the transfer belt
  When the left cabinet is opened, the transfer lift-up unit moves down, and the transfer unit moves by 9mm accordingly.

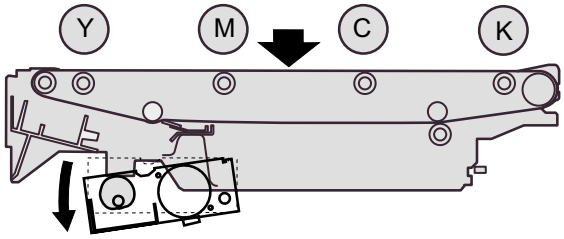

B. Disassembly/assembly/maintenance

(1) Transfer section maintenance target parts

×: Check (Clean, replace, or adjust as necessary.) ❍: Clean ▲: Replace ∆: Adjust ☆: Lubricate ❑: Shift position

Unit name	No.	Part name	When calling	50K	100K	150K	200K	250K	300K	350K	400K	Remark
Transfer section	1	Transfer belt		×	▲	×	▲	×	▲	×	▲	Replace at 100K or within 2 years.
	2	Transfer roller		×	▲	×	▲	×	▲	×	▲	
	3	Transfer belt cleaning blade		×	▲	×	▲	×	▲	×	▲	Replace at 100K or within 2 years.
	4	Transfer discharge sheet		×	❍	×	❍	×	❍	×	❍	
	5	Transfer belt cleaning roller		×	▲	×	▲	×	▲	×	▲	
	6	Transfer drive roller		×	×	×	×	×	×	×	×	
	7	Transfer follower roller		×	×	×	×	×	×	×	×	
	8	Transfer discharge brush		×	×	×	×	×	×	×	×	
	9	Sensors		×	×	×	×	×	×	×	×	
	10	Waste toner tank unit	▲	×	▲	×	▲	×	▲	×	▲	When waste toner full is detected.
	11	Transfer belt unit		×	▲	×	▲	×	▲	×	▲	Replace the unit at 100K or within 2 years.

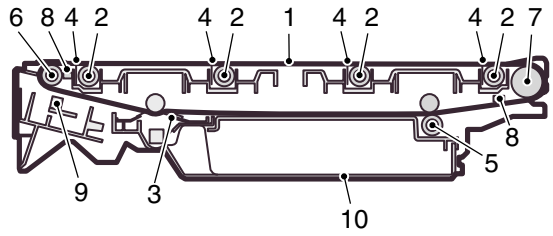

TX belt clean blade seals.

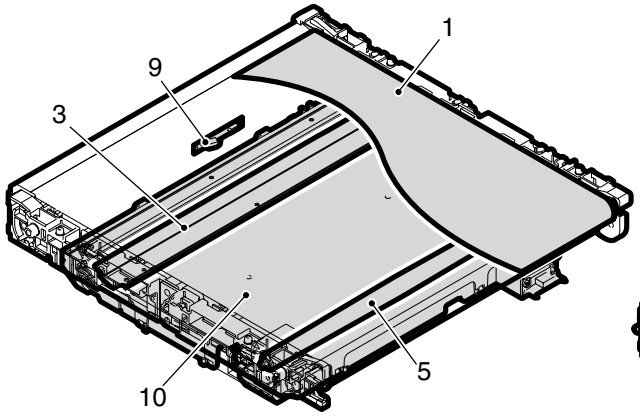

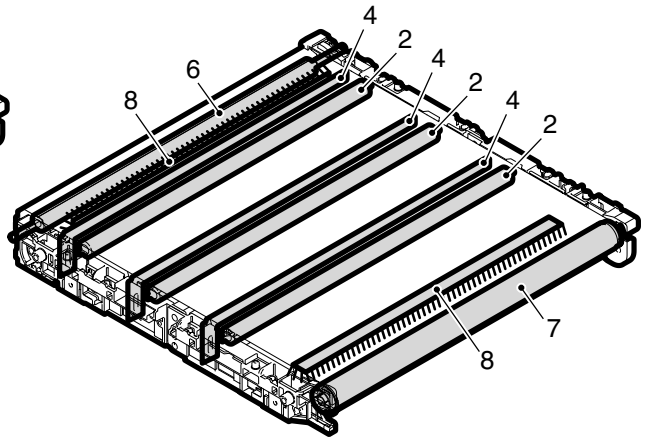

(2) Maintenance parts replacement procedure

a. Transfer unit removal

1) Open the left cabinet, and remove the fusing unit. (Refer to the section of the fusing unit.)
2) Hold section A of the transfer unit and pull it in the arrow direction so that you can hold both sides of the unit.
3) Hold both sides B and remove the transfer unit from the machine.

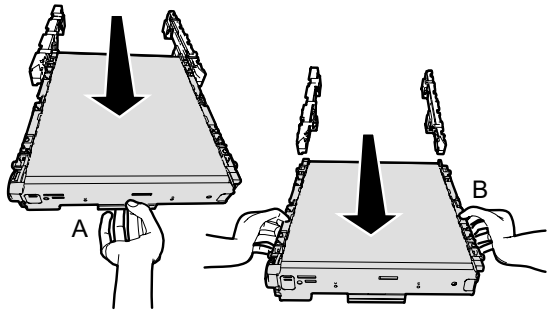

Note: Be careful not to scratch the surface of the transfer belt.

b. Belt drive motor

1) Remove the transfer unit from the machine.
2) Remove the screw, and remove the belt cover gear.

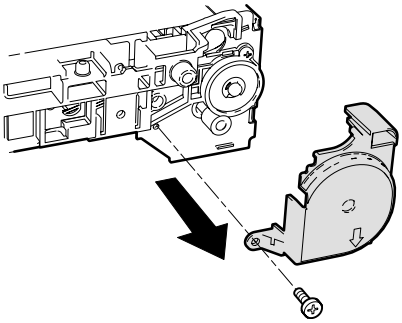

3) Remove the connector, the screw, and the motor.

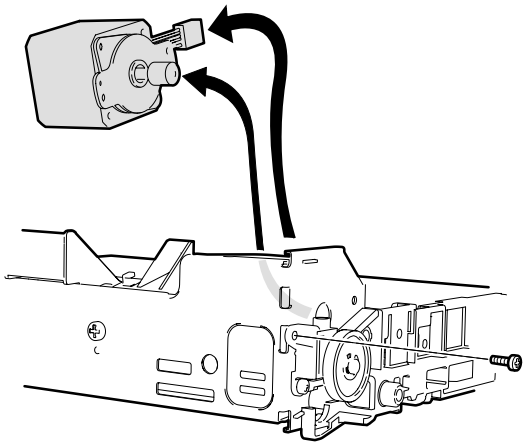

c. Process control sensor

1) Remove the transfer unit from the machine.
2) Remove the connector and the screw, and remove the belt drive unit.

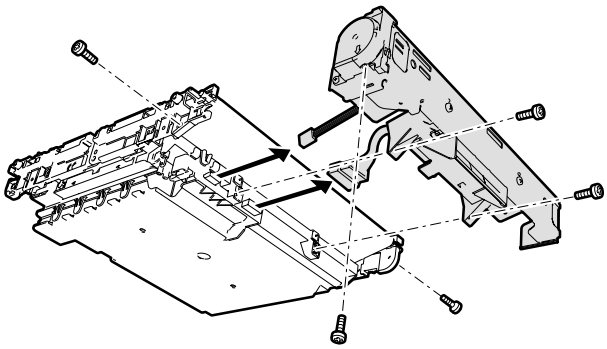

3) Remove the spring from the hook section.
4) Remove the hook, and remove the process control shutter.

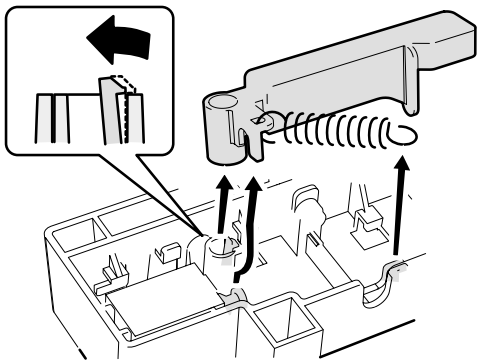

Cleaning: Clean the calibration sheet. (Wipe with soft, dry cloth.)

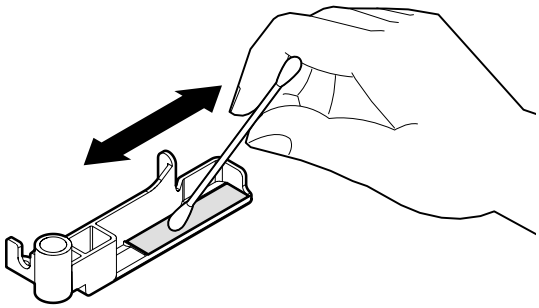

5) Remove the connector, and remove the process control sensor.

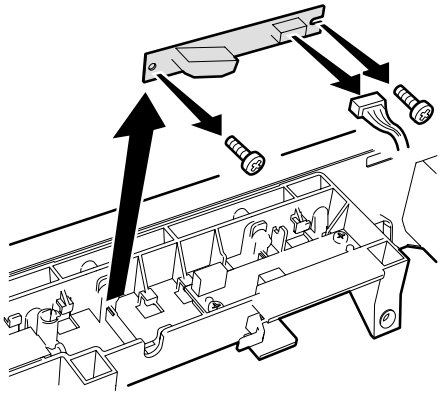

Cleaning: Clean the sensor surface.

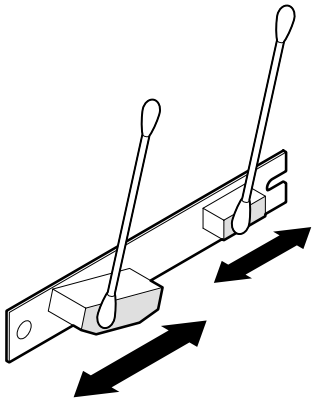

d. PWB

1) Remove the transfer unit from the machine.
2) Remove the connector and the screw, and remove the belt drive unit.
3) Remove the spring from the hook section.
4) Remove the process control shutter.
5) Remove the connector (A).
6) Remove the connector (B) and the screw, and remove the PWB.

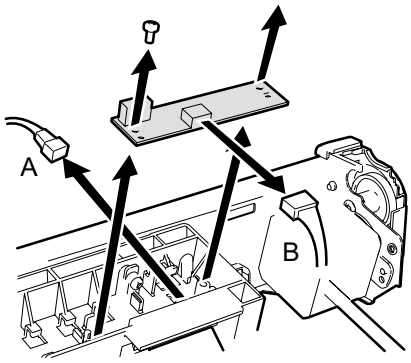

e. Waste toner tank unit

1) Remove the transfer unit from the machine.
2) Remove the connectors and the screws, and remove the belt drive unit.
3) Remove the waste toner tank unit.

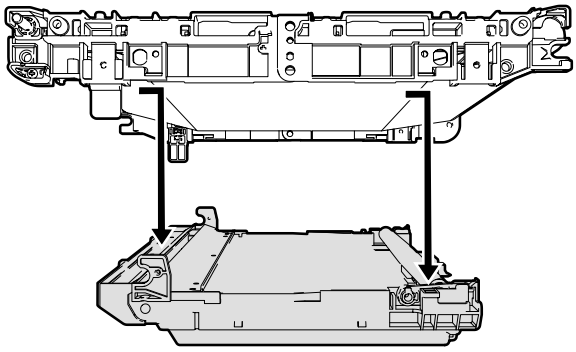

Note for assembly:

Insert the notches A and B of the waste toner tank unit into the positions in the transfer frame indicated in the figure below.

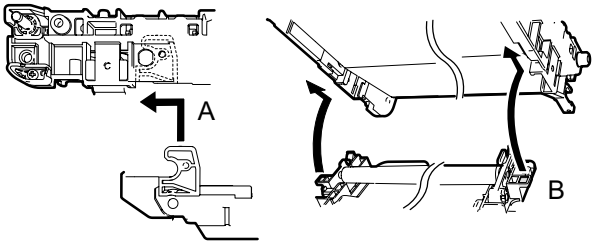

f. Transfer belt

1) Remove the transfer unit from the machine.
2) Remove the connector and the screw, and remove the belt drive unit.
3) Remove the lower screw.

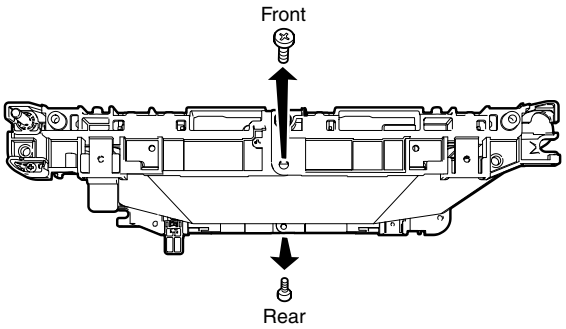

Note: If the upper screw is removed and folded, the electrode is deformed. Therefore, be sure to remove the lower screw.

4) Fold the transfer belt housing and remove the transfer belt.

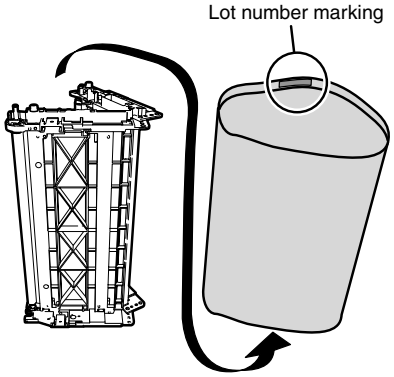

Note for installation:

When installing the transfer belt, be sure to place the lot number section marked inside the transfer belt on the front side.

g. Transfer roller

1) Remove the transfer unit from the machine.
2) Remove the connector and the screw, and remove the belt drive unit.
3) Remove the transfer belt.
4) Disengage the pawl, and remove the bearing and the transfer roller.

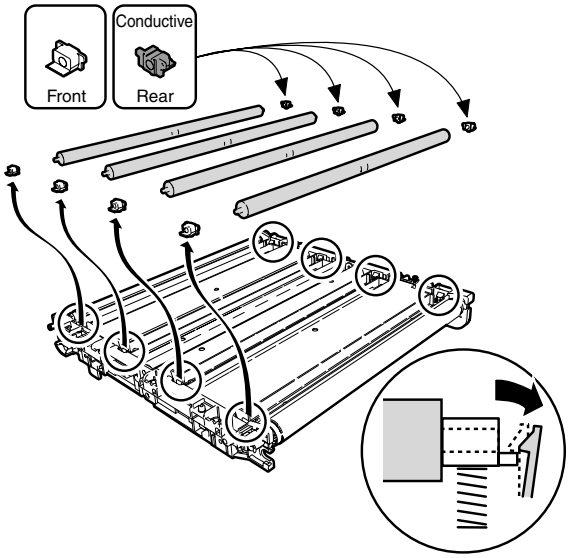

Note for assembly:

There are two different transfer roller bearings: black and white. The black bearing is conductive, and must be attached to the electrode side (rear frame side).

h. Transfer drive roller

1) Remove the transfer unit from the machine.
2) Remove the connector and the screw, and remove the belt drive unit.
3) Remove the transfer belt.
4) Remove the E-ring and the bearing, and remove the transfer drive roller.

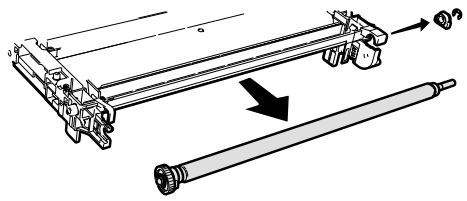

i. Transfer follower roller

1) Remove the transfer unit from the machine.
2) Remove the connector and the screw, and remove the belt drive unit.
3) Remove the transfer belt.
4) Remove the E-ring and the bearing, and remove the transfer follower roller.

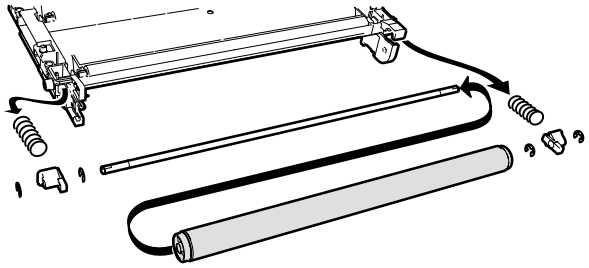

j. Transfer cleaning blade

1) Remove the transfer unit from the machine.
2) Remove the connector and the screw, and remove the belt drive unit.
3) Remove the waste toner tank unit.
4) Remove the screw, and remove the transfer cleaning blade.

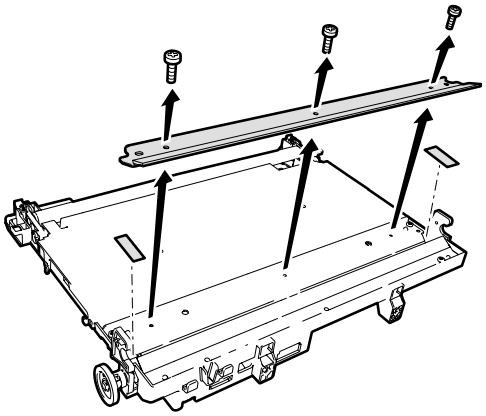

k. Transfer belt cleaning roller

1) Remove the transfer unit from the machine.
2) Remove the connector and the screw, and remove the belt drive unit.
3) Remove the waste toner tank unit.
4) Press the cleaning lever in the arrow direction A, extend the pawl in the arrow direction B, and pull up the cleaning level in the arrow direction C.
5) Remove the transfer belt cleaning roller.

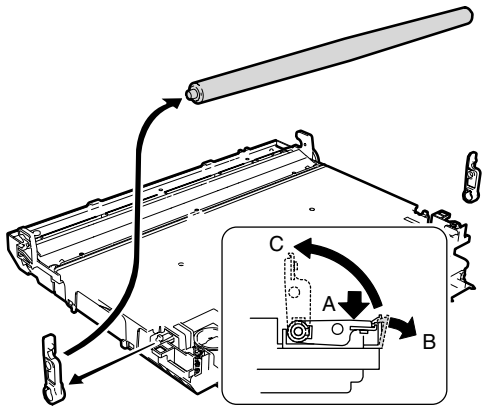

l. Belt cleaning brush

1) Remove the transfer unit from the machine.
2) Remove the connector and the screw, and remove the belt drive unit.
3) Remove the transfer belt.
4) Remove the Belt cleaning brush.

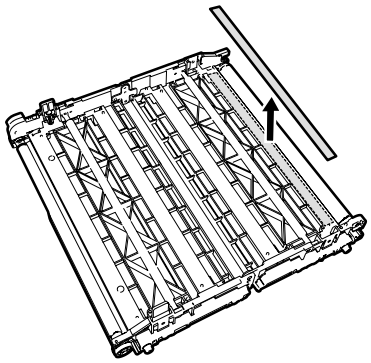

m. Transfer discharge sheets.

1) Remove the transfer unit from the machine.
2) Remove the connector and the screw, and remove the belt drive unit.
3) Remove the transfer belt.
4) Remove the terminals.

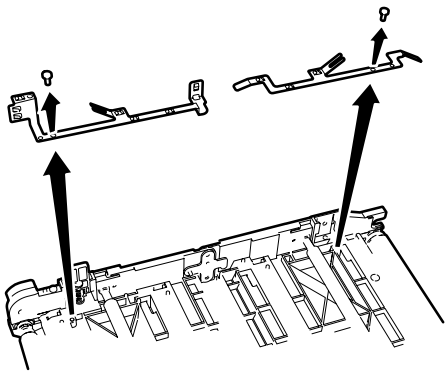

5) Remove the transfer discharge sheets.

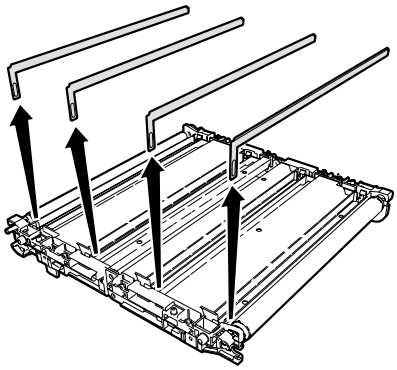

n. Transfer lift-up unit

1) Remove the screw, and remove the left cabinet of the machine.

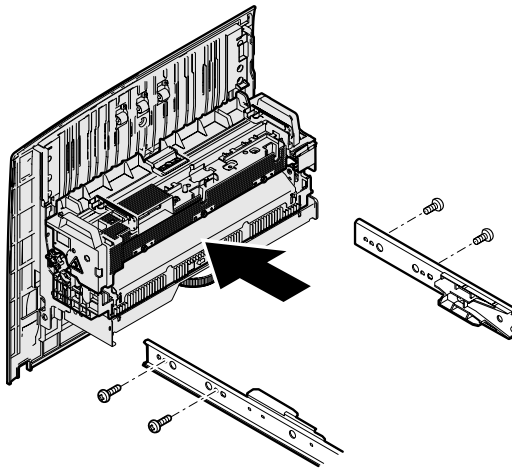

2) Remove the connector.
3) Adjust the rail positions so that section A does not make contact with the acuride section when the transfer lift-up unit is lifted up.

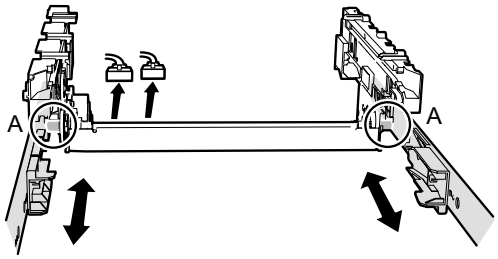

4) Lift the transfer lift-up unit in the arrow direction B with section A as the fulcrum, and remove it.

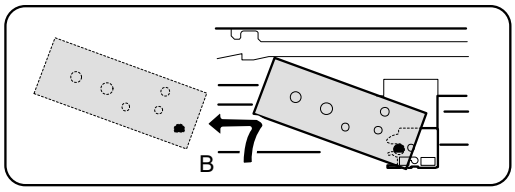

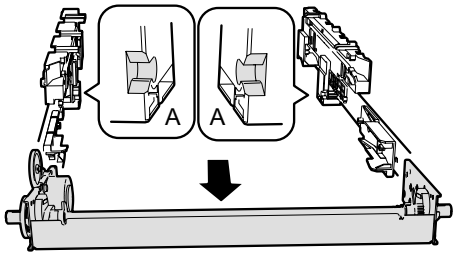

3. Process (image forming) section

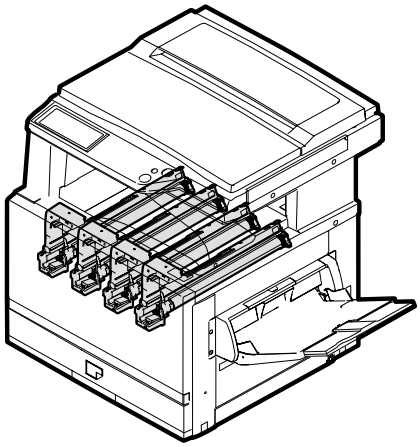

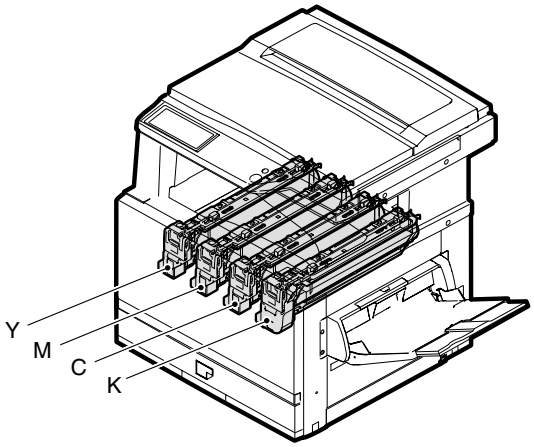

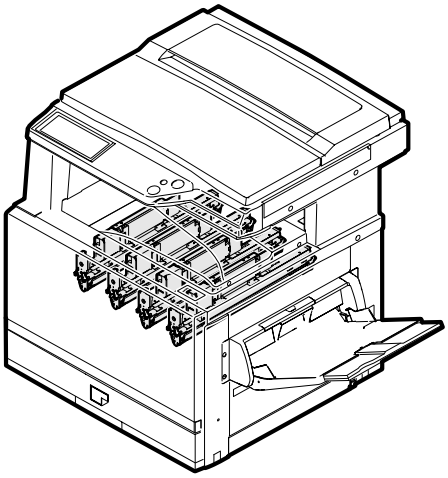

A. Operational descriptions

(1) Outline

This section functions and operates as follows:

1) In this section, the LED is lighted according to the data sent from the image process section to form electrostatic latent images on the OPC drums which are charged evenly by the main charger, and toner is attached to the electrostatic latent images.

(2) Electrical and mechanical sections

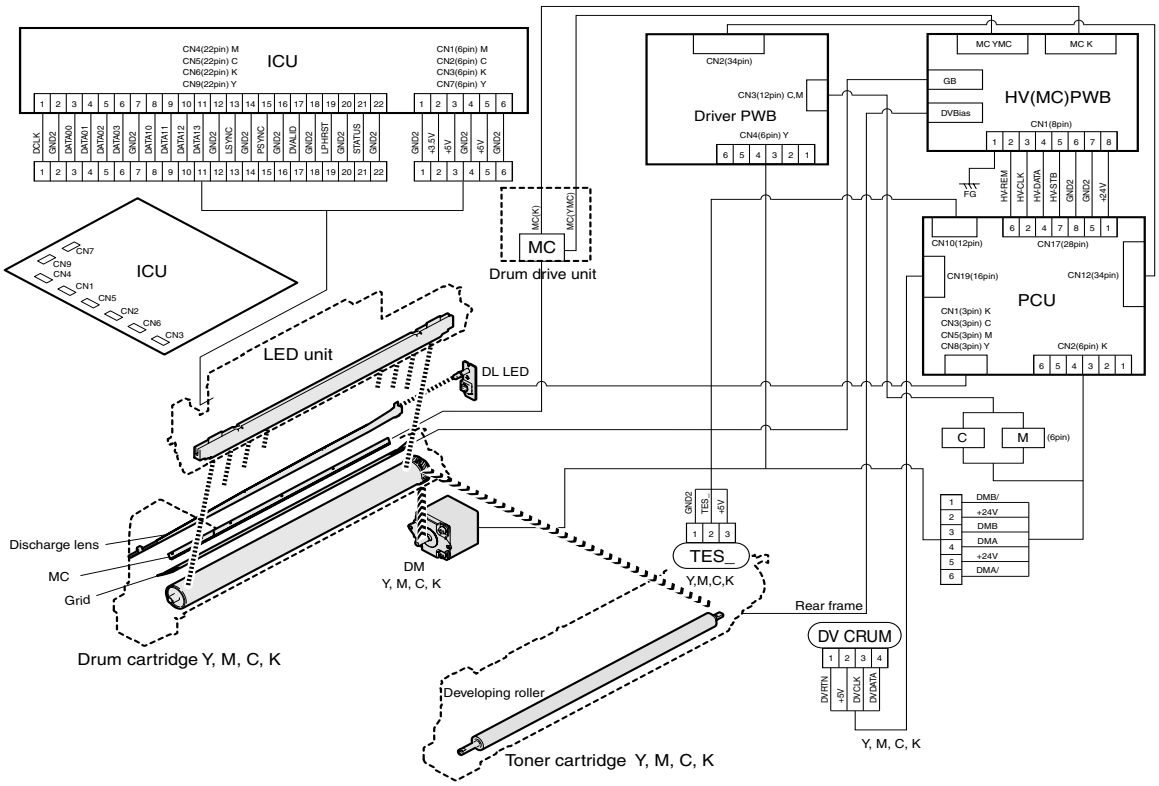

(3) Major parts/signals functions and operations

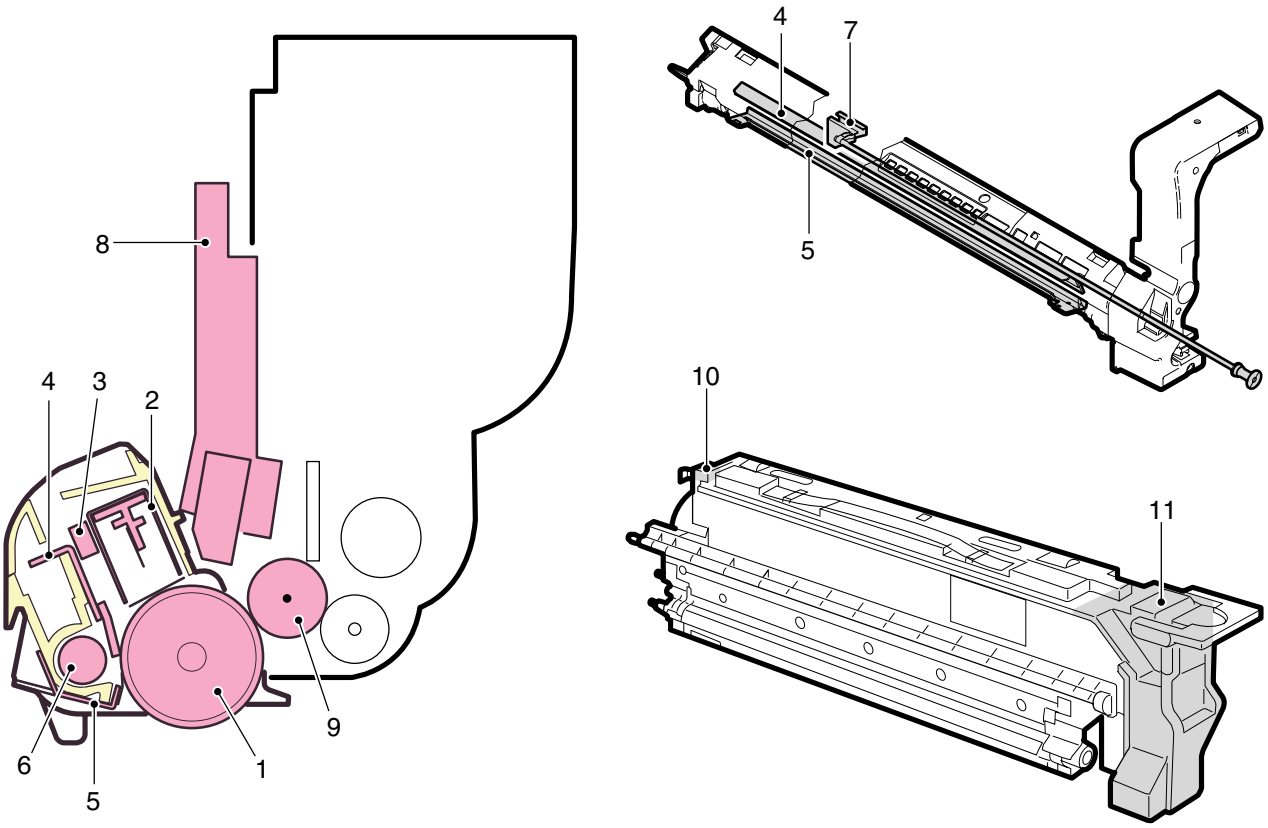

No.	Name	Code, Signal name	Function
1	OPC drum (YMCK)	—	Forms electrostatic latent images.
2	Main charger (YMCK)	MC	Charges the OPC drum surface negatively.
3	Discharge lens	—	Discharges the OPC drum surface.
4	Cleaning blade	—	Cleans the OPC drum surface to remove residual toner.
5	Toner reception seal	—	Seals to prevent against toner leakage.
6	Waste toner transport screw	—	Transports toner scraped by the cleaning blade to the waste toner box of the toner cartridge.
7	MC cleaner	—	Cleans the MC (charging plate).
8	LED unit	—	Converts image signals into LED light and radiates it onto the OPC drum.
9	Developing roller	—	Attaches toner to the OPC drum. (Do not touch the developing roller.)
10	DV CRUM (Y, M, C, K)	—	Memory for toner cartridge data (counter, etc.)
11	Waste toner box	—	Collects waste toner transported from the drum cartridge.
RW	Grid biks	GB	Controls the drum surface potential.
RW	Discharge lamp	DL	Radiates lights onto the discharge lens.
RW	Drum motor A, A', B, B'	DM A, A', B, B'	Drives the OPC drum.
RW	Toner empty sensor	TES	Detects the toner quantity in the toner cartridge.

RW: Abbreviation of Related Wiring, which means the said load is specified in the related figure of the mechanical and the electrical sections.

(4) Operational descriptions

a. Drum cartridge and toner cartridge drive

The drive power for the drum cartridges are transmitted from the drive motor (DM) to the drum gears.

The toner cartridge is driven through the drum gear and the connection gear.

The motor (stepping motor) for black is driven by the drive signal sent directly from the PCU, and the motors color are driven by the drive signals sent from the PCU through the driver PWB.

b. LED (writing) unit

Four LED (writing) units are provided for each of Yellow, Magenta, Cyan, and Black.

Each LED (writing) unit converts YMCK dot image data outputted from the ICU PWB into LED light, and radiate the light onto the OPC drum, forming electrostatic latent images on the OPC drum.

Since the position of each LED unit of CMYK is shifted in the paper transport direction, the above operation depends on the relative position and differs in the operating timing.

• LED unit composition

Item		Content
Print width		314mm
Total number of dots		7424 dot
Resolution		600dpi
LED composition	Number of LED chips	58 chip
	Number of dots	128 dot
Lens		Selfoc lens

c. OPC drum section operations

The OPC drum surface is charged negatively by the main charger, and LED light of images are radiated onto the OPC drum surface by the LED (writing) unit to form electrostatic latent images.

1) The OPC drum surface is negatively charged by the main charger.

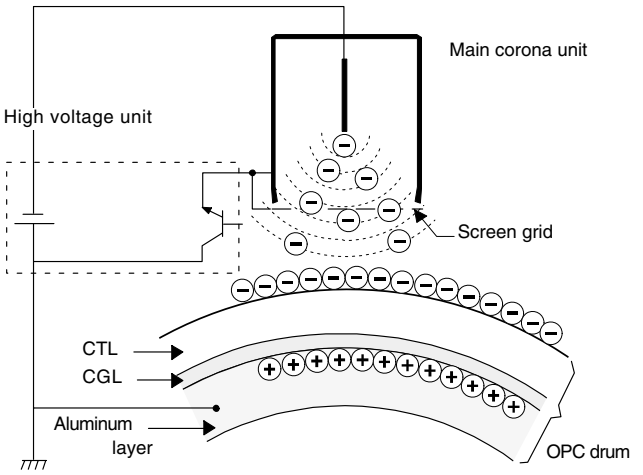

The screen grid is attached to the main charger unit. The OPC drum is charged at a voltage nearly same as the voltage applied to the screen grid.

2) LED light is radiated onto the OPC drum surface by the LED (writing) unit to form electrostatic latent images.

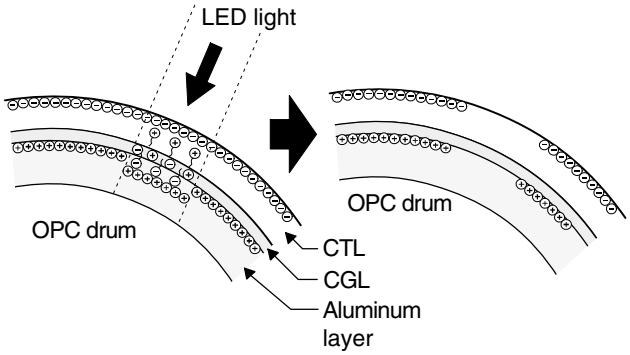

When LED light is radiated onto the OPC drum CGL, positive and negative charges are generated. Positive charges generated in the CGL are attracted and moved by negative charges of the OPC drum, and negative charges by positive charges of the aluminum layer of the OPC drum. Therefore, on the OPC drum surface and in the aluminum layer, positive and negative charges are neutralized, reducing the OPC drum surface potential.

Electric charges remain in the areas where LED light is not radiated onto the OPC drum.

As a result, electrostatic latent images are formed on the OPC drum surface.

Charges are disposed in direct proportion to the amount of light received.

3) Clean and remove residual toner from the OPC drum with the cleaning blade after transfer operations.

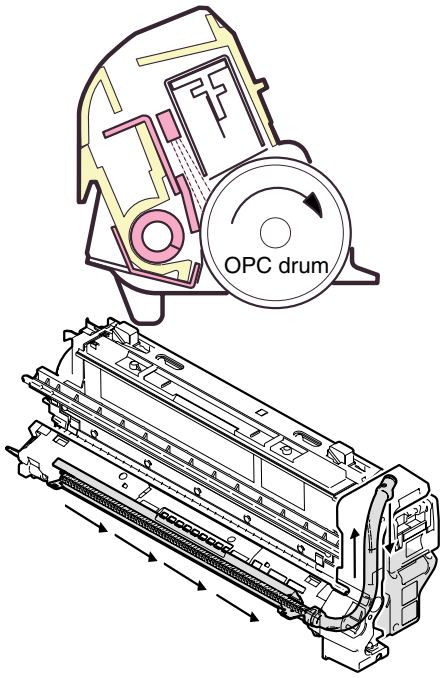

Removed residual toner is transported to the waste toner section of the toner cartridge by the waste toner transport screw.

4) The whole surface of the OPC drum is discharged.

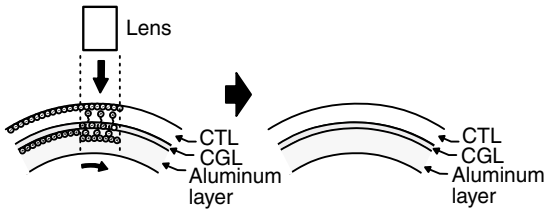

By radiating discharge lamp light onto the discharge lens, light is radiated through the discharge lens to the OPC drum surface.

When discharge lamp light is radiated onto the OPC drum CGL, positive and negative charges are generated.

Positive charges generated in the CGL are attracted and moved by negative charges of the OPC drum, and negative charges by positive charges of the aluminum layer of the OPC drum. Therefore, on the OPC drum surface and in the aluminum layer, positive and negative charges are neutralized, reducing the OPC drum surface potential, preparing the drum surface for the new copy cycle.

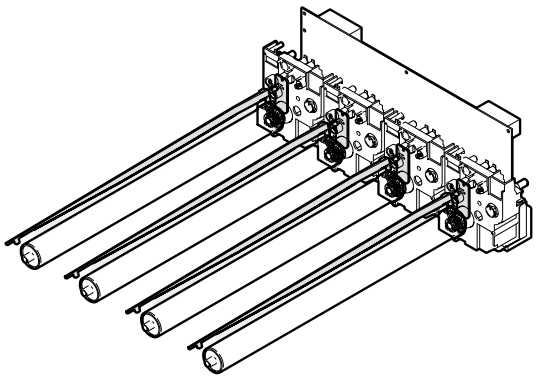

d. Developing section (composed of four units of YMCK) operations

Electrostatic latent images generated on the OPC drum by the LED (writing) units are converted into visible images by toner.

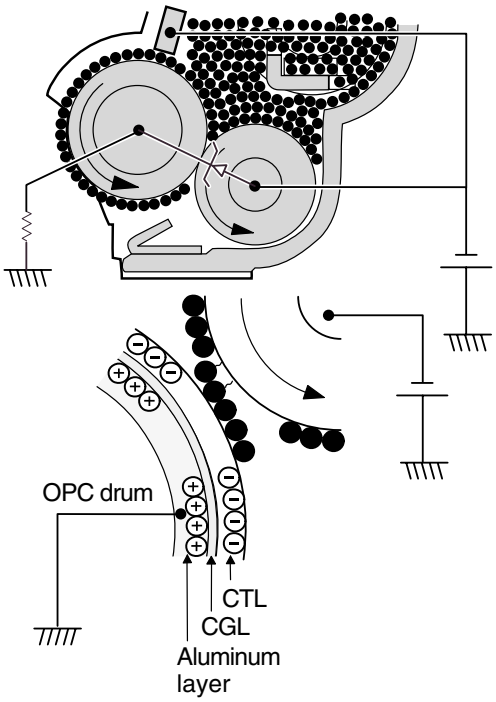

Toner in the developing unit is agitated by the mixing roller.

By mixing operation, toner is negatively charged due to mechanical friction.

The developing bias voltage (negative) is applied to the developing roller.

The difference for the voltage potential between the toner and DV roller surface attracts the toner to the DV roller.

In the areas of the OPC drum, when the charge was detected, the voltage potential difference is greater than the DV roller. Therefore the toner is attracted from the DV roller to the drum.

In the unexposed areas of the drum, the potential on the DV roller created by the bias voltage and therefore the toner to not attracted to those areas of the drum.

Negatively charged toner is attracted and attached to the exposed area on the OPC drum surface where the negative potential was reduced by LED exposure.

On the other hand, in the areas on the OPC drum where exposure was not made, the positive potential is higher than the developing bias voltage, repelling toner.

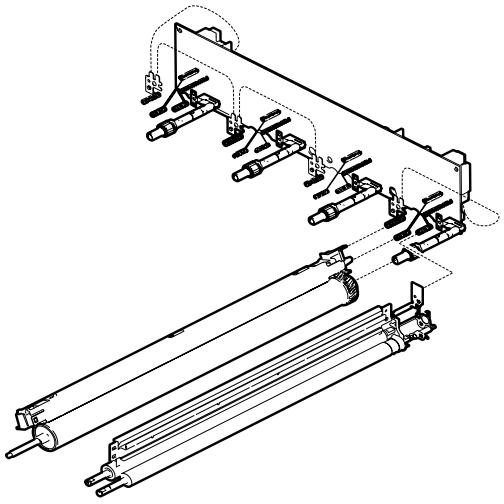

<1> Remaining toner quantity detection

Rotation of the detection lever connected to the mixing roller is sensed by the sensor (TES) to detect the remaining toner quantity.

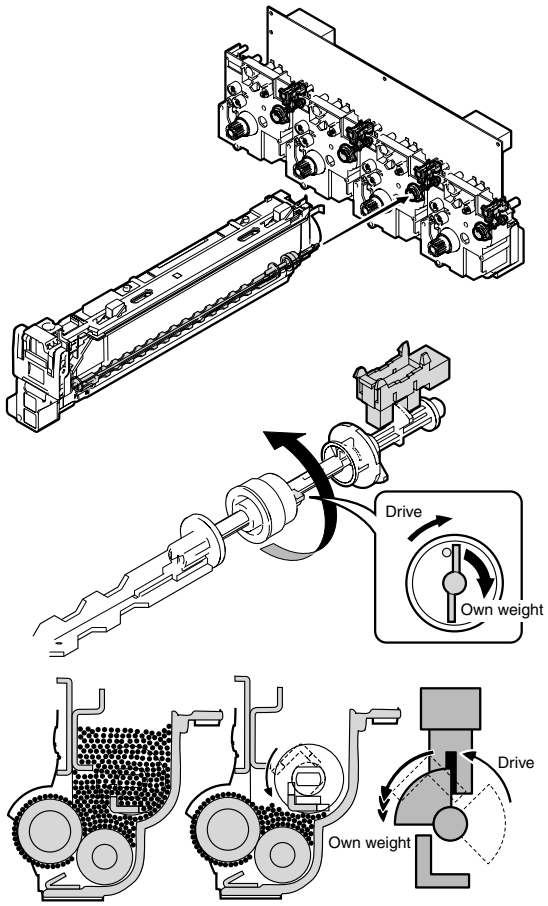

<2> Waste toner collection

Waste toner collected by the drum cleaning blade is transported to the waste toner box of the toner cartridge by the toner transport spring in the drum unit.

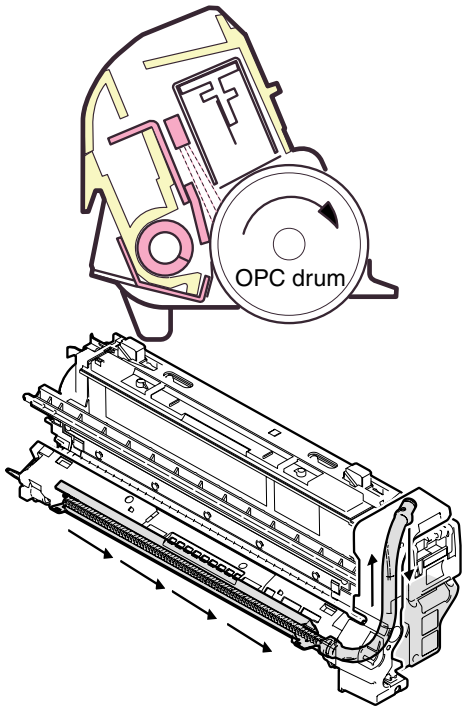

B. Disassembly/assembly/maintenance

(1) Process section maintenance target parts

×: Check (Clean, replace, or adjust as necessary.) ❍: Clean ▲: Replace ∆: Adjust ☆: Lubricate ❑: Shift position

Unit name	No.	Part name	When calling	50K	100K	150K	200K	250K	300K	350K	400K	Remark
Drum module	1	Drum (Black/color)		▲	▲	▲	▲	▲	▲	▲	▲	
	2	Charging unit		▲	▲	▲	▲	▲	▲	▲	▲	
	3	Cleaner blade		▲	▲	▲	▲	▲	▲	▲	▲	
	4	Toner reception seal		▲	▲	▲	▲	▲	▲	▲	▲	
	5	Drum cartridge		▲	▲	▲	▲	▲	▲	▲	▲	When replacing the unit
Developing section (integrated with toner cartridge)	6	Toner cartridge	User replacement at every toner empty									
LED	7	LED lens	❍	❍	❍	❍	❍	❍	❍	❍	❍	

Note: When replacing the OPC drum, execute SIM 25-1 for 2 minutes. (This simulation is executed in order to avoid generation of stripes on a half-tone print image.)

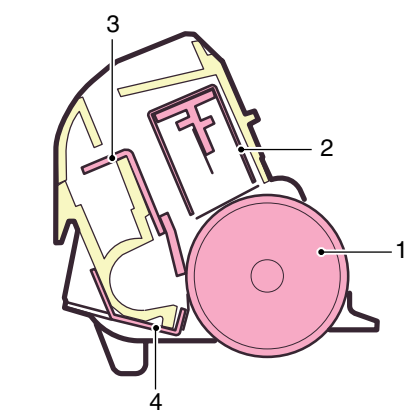

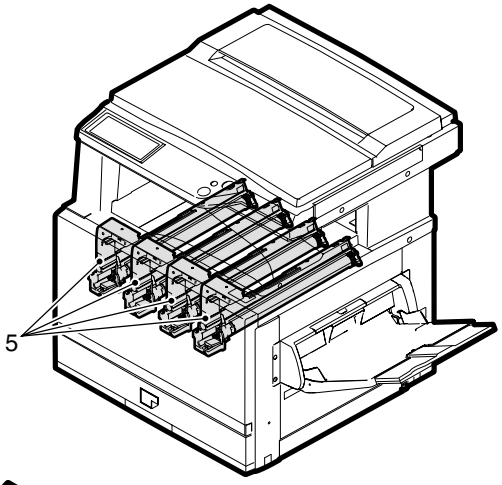

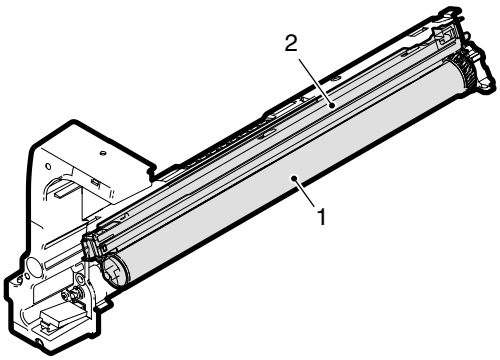

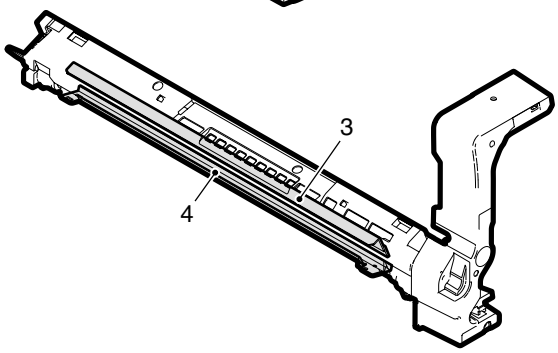

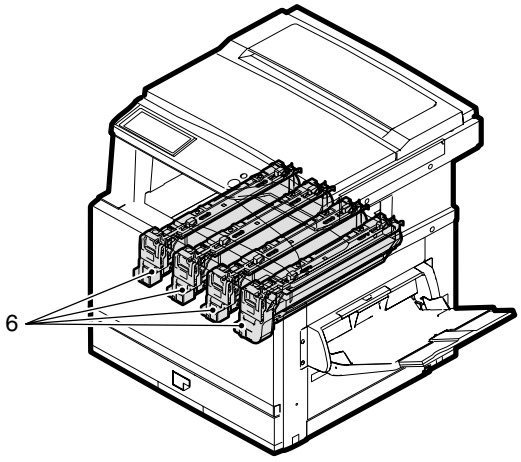

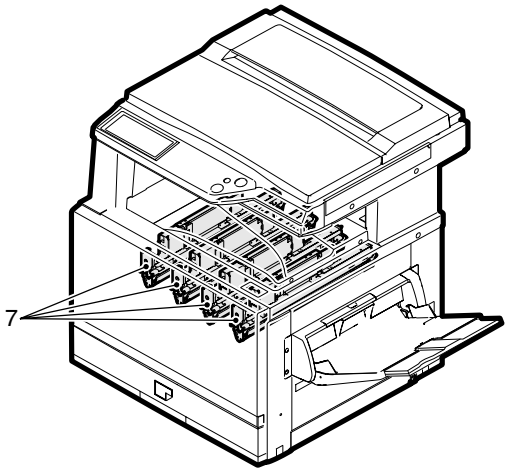

(2) Maintenance parts/major parts replacement

a. Drum unit removal

1) Open the front cabinet and left cabinet.

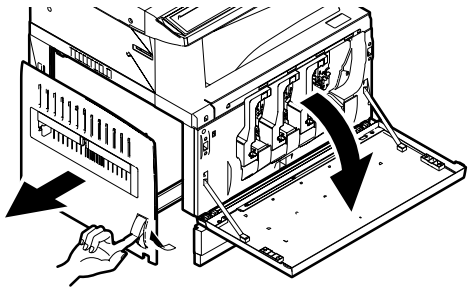

2) Turn the fixing screw in the arrow direction A to release it, and remove the drum unit in the arrow direction B.

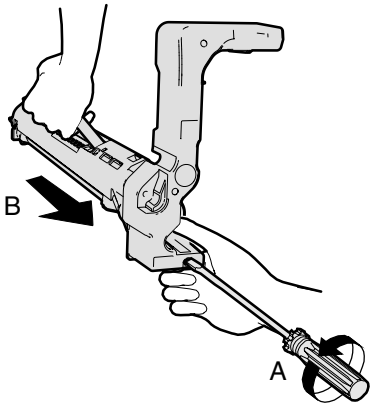

Note: Be sure to open the left cabinet before releasing the fixing screw.
If the fixing screw is released before opening the left cabinet, the lock cannot be released.
In that case, push the drum unit to the rear frame side and release the lock, and remove the drum unit.

b. Drum removal

1) Remove the drum unit.
2) Remove the retaining clip from the drum shaft (A).
3) Slide the drum shaft in the arrow direction B.
4) Remove the drum in the arrow direction C.

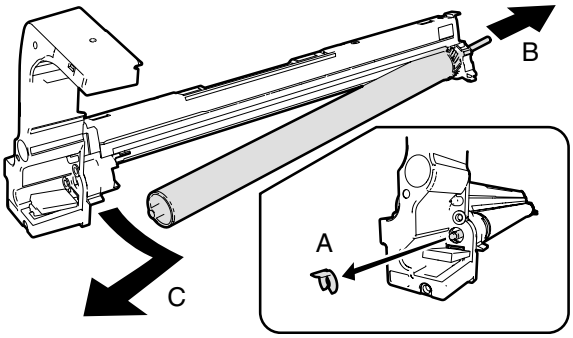

c. Charging unit

1) Remove the drum unit.
2) Remove the screw and remove the cover (A).
3) Remove the MC unit from the MC cleaning shaft.
4) Remove the charging unit (C).

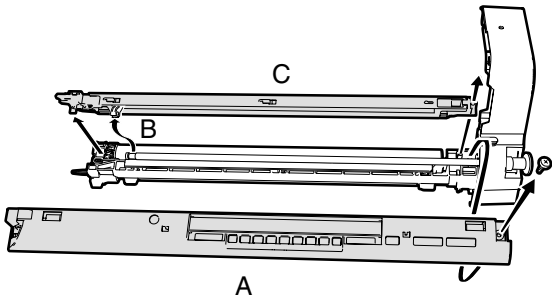

* When assembling, attach the drum, then attach the charging unit. (This is to prevent against dirt by starting powder applied to the drum.)

d. Cleaner blade

1) Remove the drum unit.
2) Remove the charging unit.
3) Remove (A).
4) Remove the screw, and remove the cleaner blade.

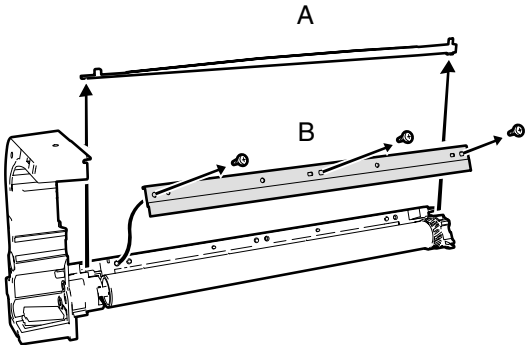

e. Toner reception seal

1) Remove the drum unit.
2) Remove the drum.
3) Remove the screw, and remove the toner reception seal.

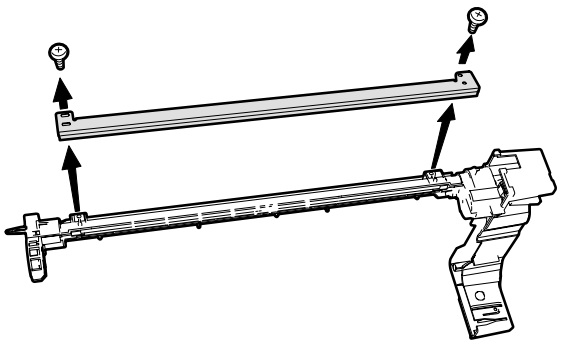

Note: Do not deform the seal.

f. MC cleaner

1) Remove the drum unit.
2) Remove the screw, and remove cover (A).
3) Remove the MC unit.
4) Disengage the pawl, and remove the MC case in the arrow direction.

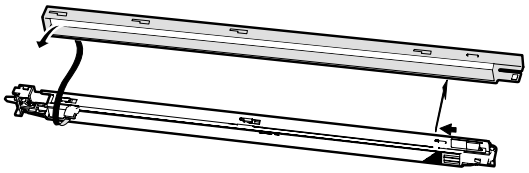

5) Remove the screen grid.

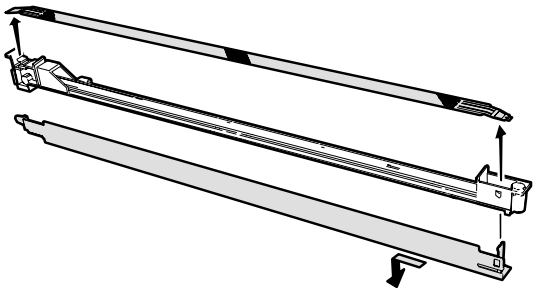

6) Disengage the pawl, and remove the MC cleaner.

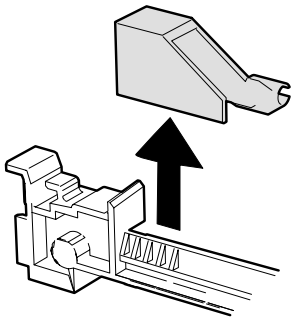

g. Developing unit removal

1) Open the front cabinet and the left cabinet of the machine.
2) Lift the lever in the arrow direction A, and remove the developing unit in the arrow direction B.

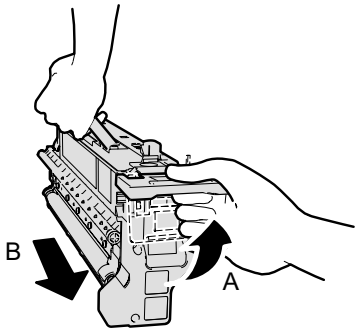

h. LED unit removal

1) Remove the rear cabinet.
2) Remove the PCU PWB unit.
3) Remove the drum unit.
4) Remove the developing unit.
5) Remove the top cover, and disconnect the connector of the ICU.

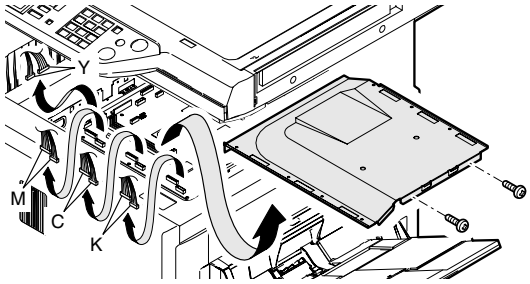

6) Remove the screw (A) on the rear side, and remove the LED unit.

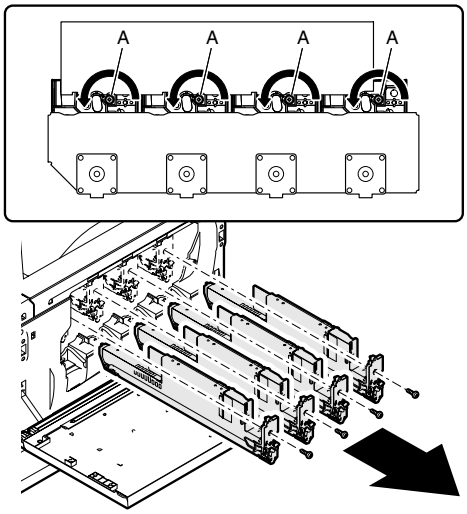

7) Remove the LED unit.
8) Remove the connector cover and the harness.

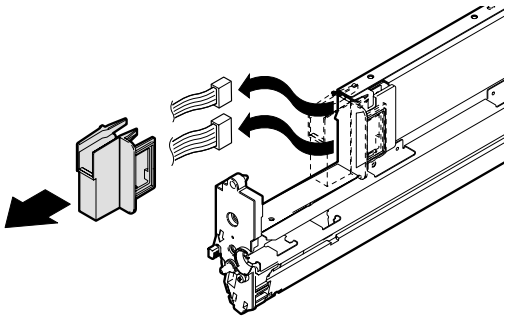

i. LED lens cleaning

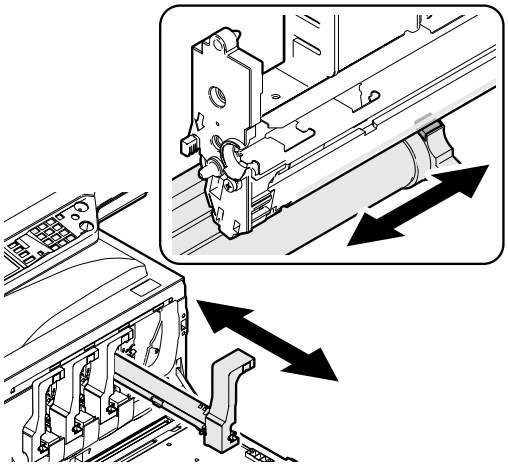

4. Optical section (Scanner section)

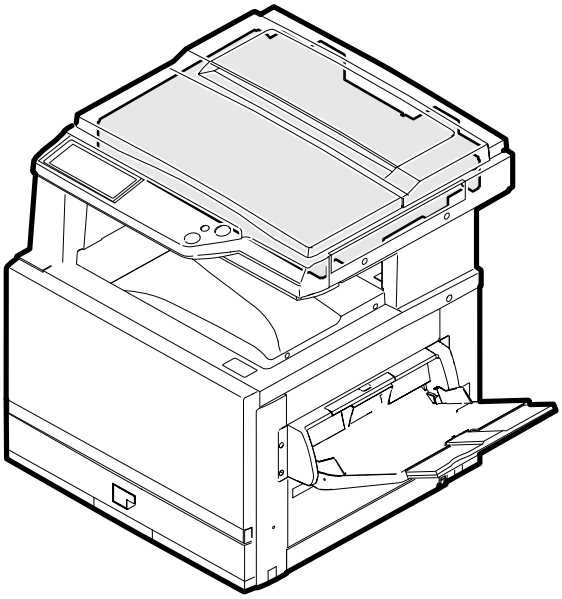

A. Operational descriptions

(1) Outline

This section functions and operates as follows:

1) The copy lamp radiates light onto the document, and the reflected light is scanned by the three line (RGB) CCD element and then converted into image signals (analog).
2) The image signals (analog) are converted into 8bit digital signals by the A/D converter.
3) The image signals (digital) are sent to the image process section (ICU PWB).

(2) Electrical section and mechanical section

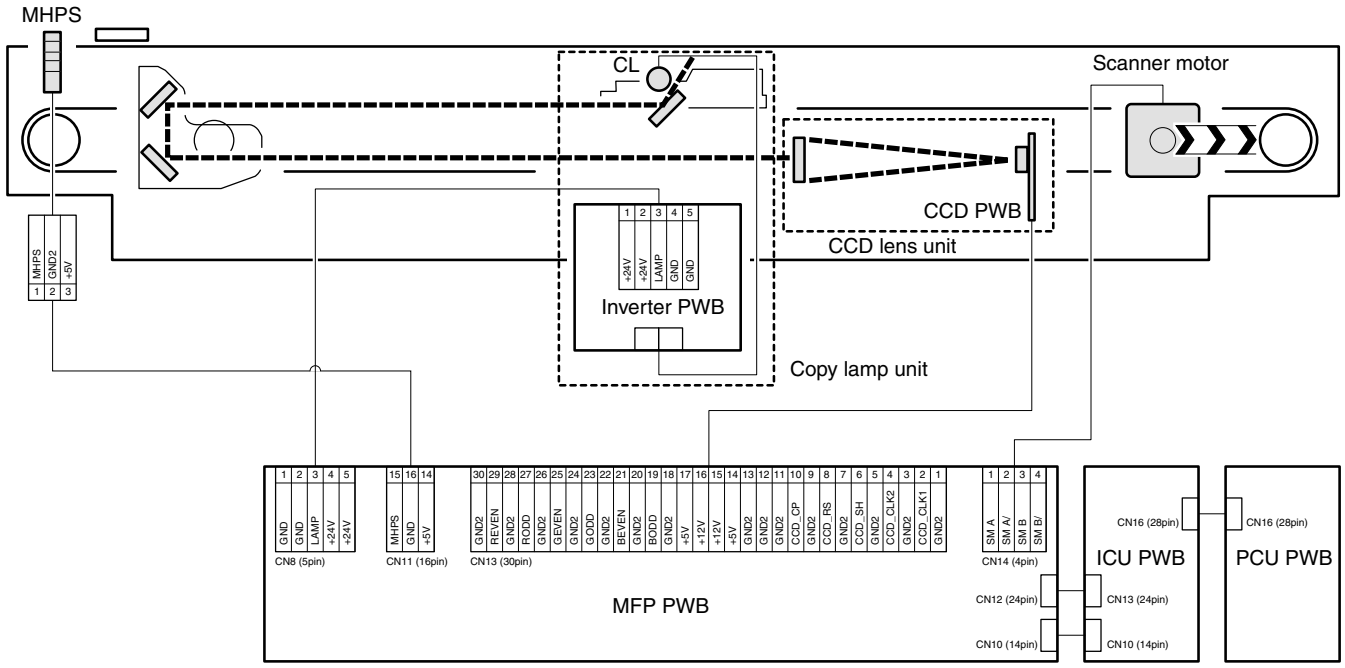

(3) Major parts and signals functions and operations

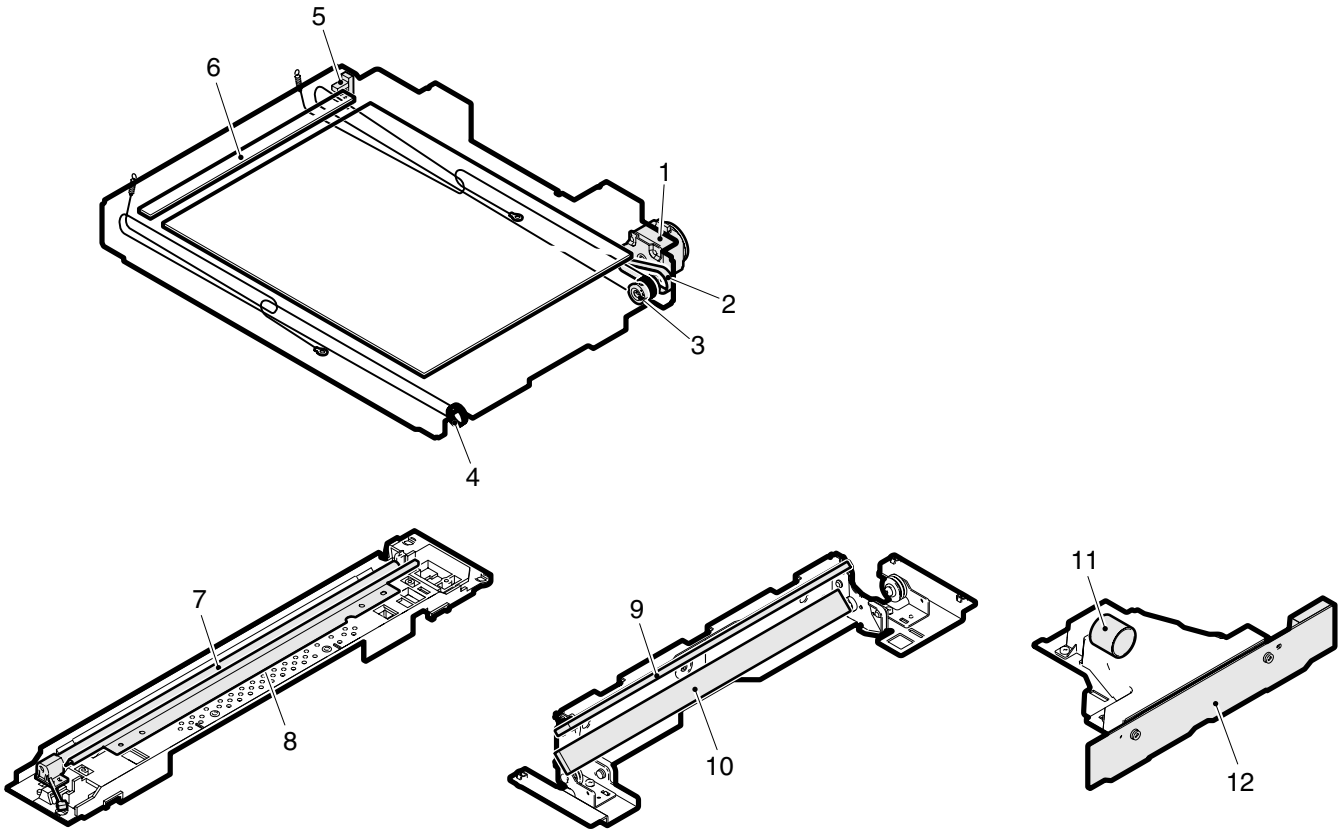

No.	Name	Code, Signal name	Function
1	Scanner motor	SM	Drives the copy lamp unit and the mirror base unit.
2	Pulley belt	—	Transmits drive power of the scanner motor to the pulley.
3	Pulley	—	Drives the scanner drive wire.
4	Scanner drive wire	—	Transmits drive power of the scanner motor to the copy lamp unit and the mirror base unit.
5	Scanner unit home position sensor	MHPS	Detects the home position of the copy lamp unit.
6	Shading glass	—	Reference glass for shading correction
7	Copy lamp	CL	Radiates light onto documents. (Xenon lamp)
8	Reflector	—	Converges light from the copy lamp.
9	No. 2 mirror	—	Sends document images to No. 3 mirror.
10	No. 3 mirror	—	Sends document images to the lens.
11	Lens	—	Reduces document images (photo images) and projects them to the CCD.
12	CCD PWB	—	Receives the document image (photo signals) and converts them into electrical signals.
RW	Inverter PWB	LAMP	Drives the copy lamp (Xenon lamp).
RW	Scanner motor drive	SM A, A', R, B'	
RW	MHPS	MHPS	Scanner home position detect jam

RW: Abbreviation of Related Wiring, which means the said load is specified in the related figure of the mechanical and the electrical sections.

(4) Operational descriptions

a. Optical section drive

The optical section drive power is transmitted from the drive motor (SM) through the belt, the drive pulley, and the wire to drive the copy lamp unit and the mirror base which are attached by the drive wires.

The drive motor (stepping motor) is controlled by the drive signal sent from the MFP PWB.

b. Copy lamp drive

The copy lamp is driven by the copy lamp drive voltage generated in the inverter PWB according to the control signal sent from the MFP PWB.

c. Image scan/color separation

The CCD element, appeared as one unit, but has three separate rows of CCD elements drive each for (RGB).

Light is radiated to a document by the copy lamp (Xenon lamp), and the brightness of the reflected light is received by the three line (RGB) CCD element and converted into (analog) image signals.

Each color component of RGB is separately extracted from the document image by the three lines (RGB) of the CCD elements.

The red CCD extracts the red components from the document image, the green CCD the green components, and the blue CCD the blue components. This operation is called Color Separation.

The CCD element, appeared as one unit, but has three separate rows of CCD elements drive each for (RGB).

Scanning of a document in the main scanning direction is performed by the CCD elements. Scanning of a document in the sub scanning direction is performed by shifting the scanner unit position with the scanner motor.

Document images are optically reduced by the lens and projected to the CCD elements.

The scanning resolution is 600dpi × 600dpi.

3 LINES CCD UNIT

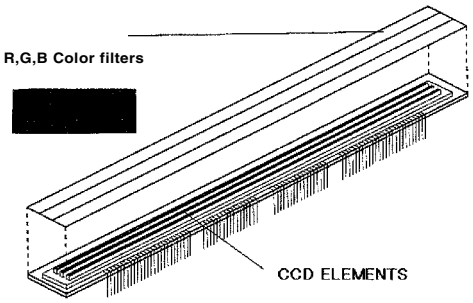

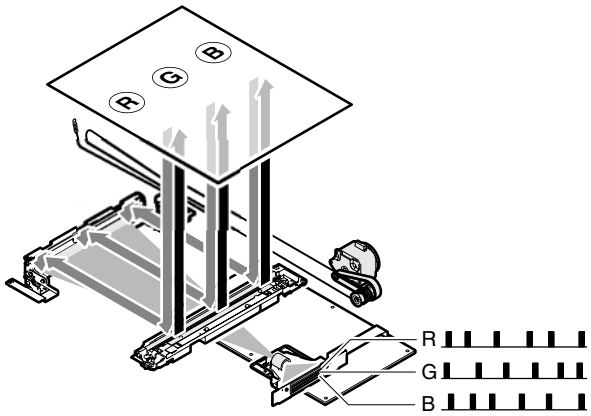

(Image data for one line)

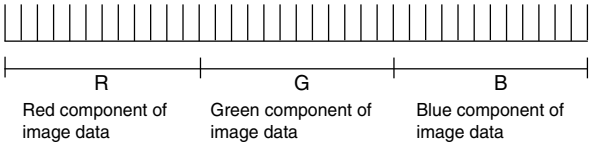

d. Image signal A/D conversion

1) Each image signal (analog) of RGB is converted into 8bit digital signal by the A/D converter. Each color pixel has 8bit information (256 gradations).
2) Each 8bit digital image signal of RGB is sent to the image process section.

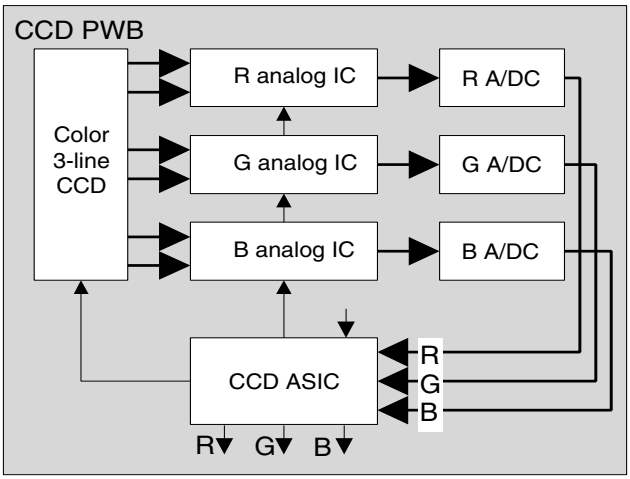

e. Zooming operation

Zooming in the sub scanning direction is performed by changing the scanning speed in the sub scanning direction.

Zooming in the main scanning direction is not performed optically but by the image process technology (software).

B. Disassembly/assembly/maintenance

(1) Transfer section maintenance target parts

×: Check (Clean, replace, or adjust as necessary.) ❍: Clean ▲: Replace ∆: Adjust ☆: Lubricate ❑: Shift position

Unit name	No.	Part name	When calling	50K	100K	150K	200K	250K	300K	350K	400K	Remark
Optical section	1	CCD, mirror, lens, reflector		❍	❍	❍	❍	❍	❍	❍	❍	
	2	Table glass, sensors, OC		❍	❍	❍	❍	❍	❍	❍	❍	
	3	Shading glass		❍	❍	❍	❍	❍	❍	❍	❍	
	4	Rails		☆	☆	☆	☆	☆	☆	☆	☆	
	5	Drive wire, pulley, pulley belt		×	×	×	×	×	×	×	×	

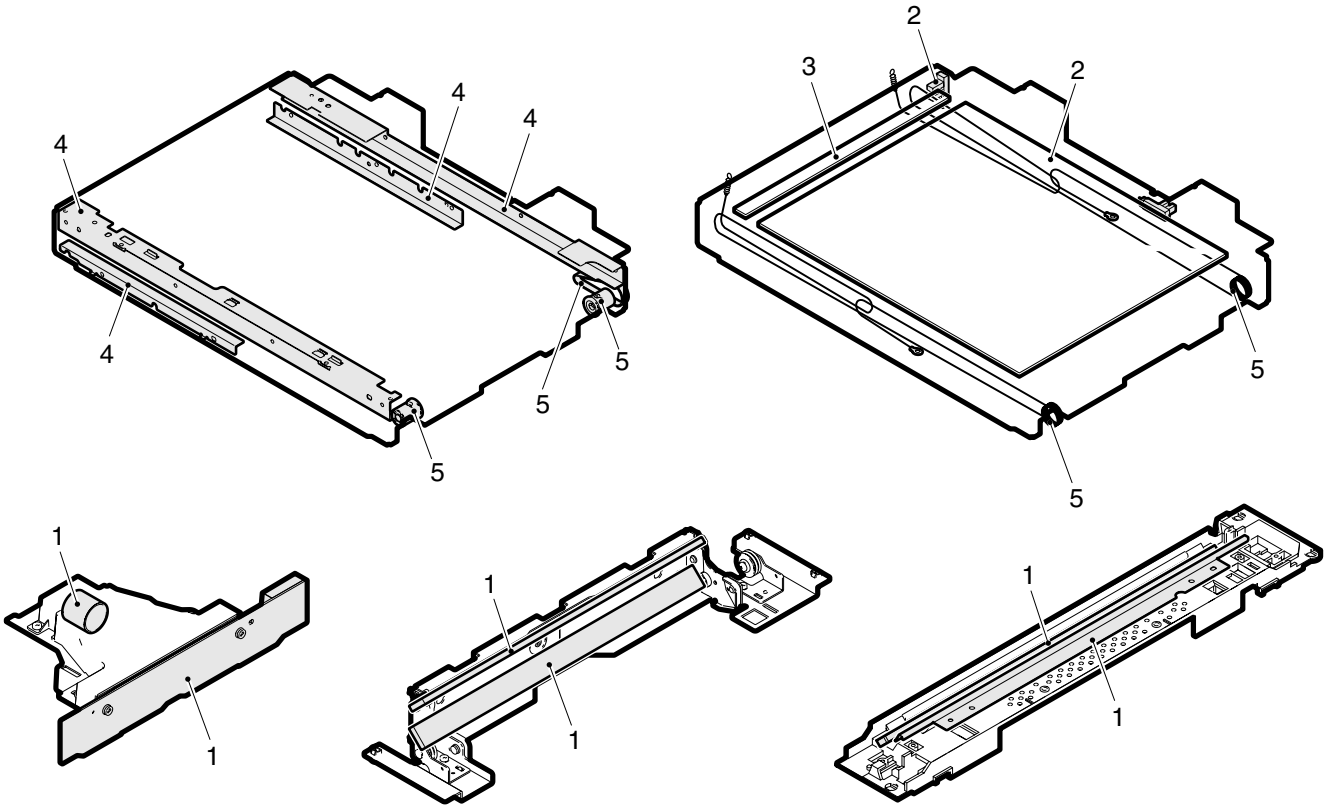

(2) Major parts replacement

a. MFP PWB

1) Open the upper cabinet rear cover.
2) Remove the connector and the screw, and remove the scanner control PWB unit. Remove the screw and remove the scanner control PWB (A).

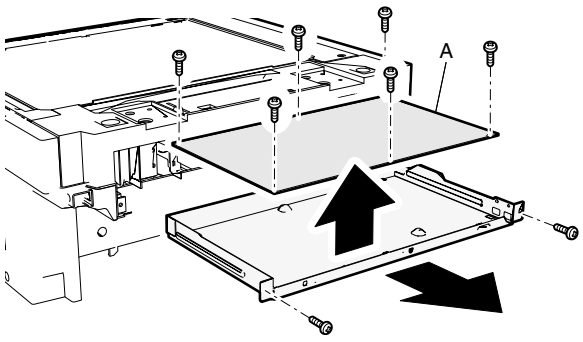

b. CCD unit

1) Remove the screw, the glass holder right (A), the glass holder left (B), and the table glass (C).

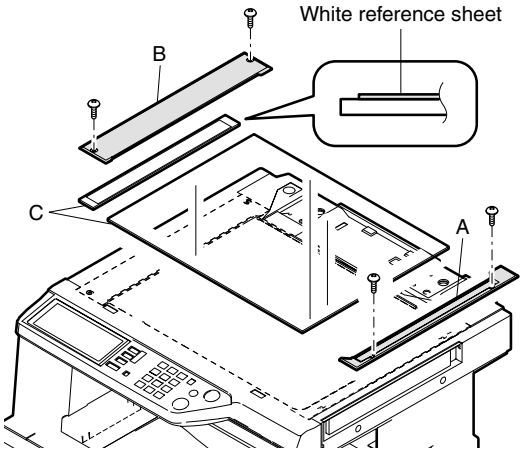

2) Remove the screw and the dark box cover (A). Remove the connector, the screw, and the CCD unit (B).

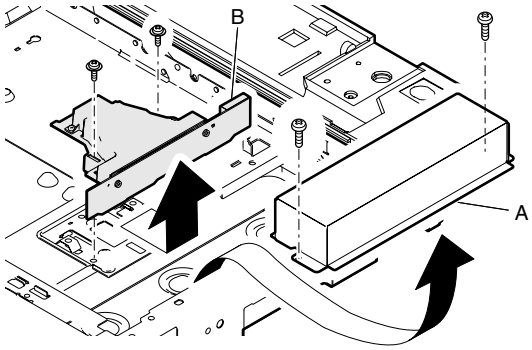

c. Lamp unit

1) Shift the lamp unit to the position shown below. Loosen the screw and remove the wire.

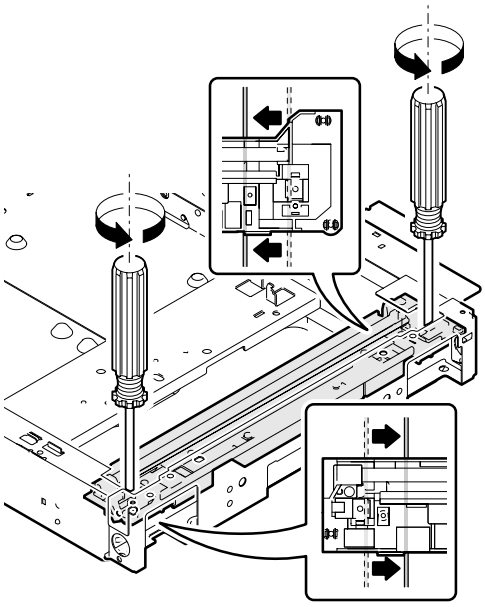

2) Rotate the lamp unit and lift it, and remove the harness holder and the harness. Remove the lamp unit.

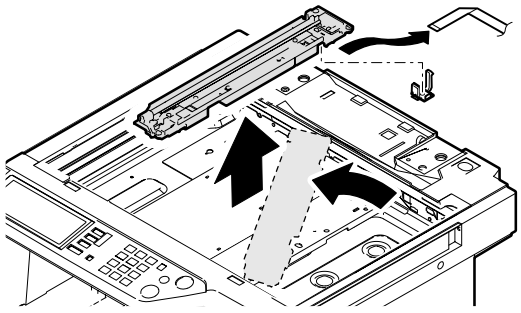

d. Xenon lamp

1) Remove the lamp unit.
2) Remove the harness and the screw, and remove the Xenon lamp.

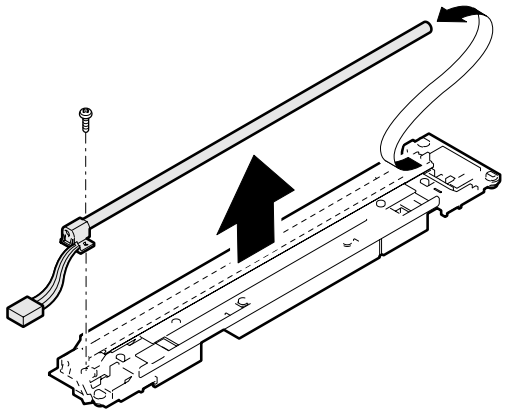

e. Scanner motor

1) Remove the upper cabinet rear unit.
2) Remove the connector, the screw, and the belt. Remove the motor.

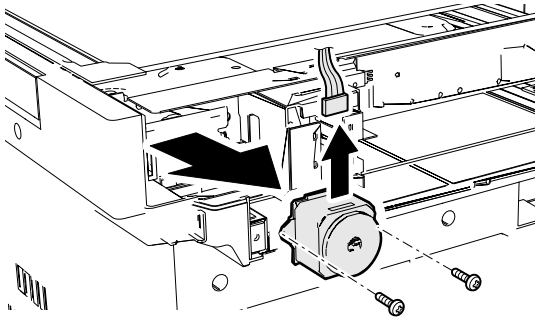

f. MHPS

1) Remove the upper cabinet rear unit.
2) Remove the screw and remove the upper cabinet left. Remove the screw and the connector, and remove the MHPS.

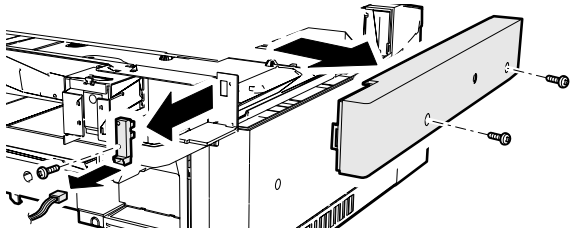

5. Paper feed, paper transport, and paper exit sections

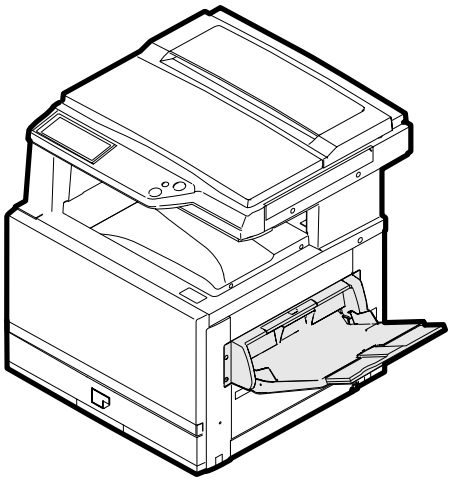

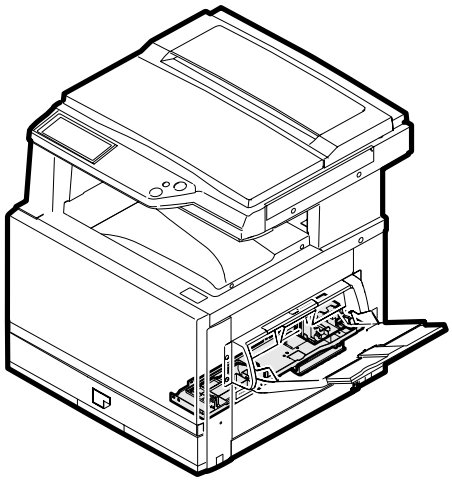

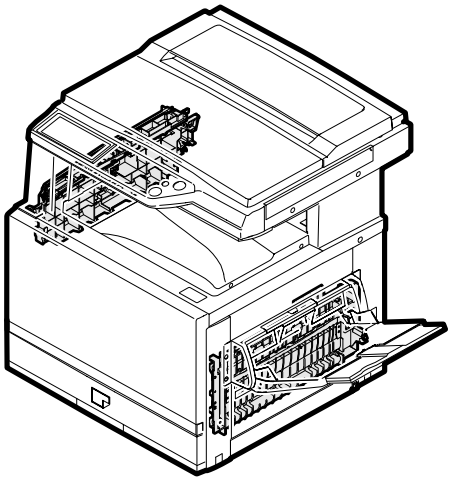

A. Operational descriptions

(1) Outline

This model is provided with a cassette paper feed tray and a manual paper feed tray as standard provision.

As an option, either the 3-stage paper feed cassette module (AR-D18) or the 2-stage duplex paper feed cassette module (AR-D19) can be installed.

The paper transport section transports paper from each paper feed port to the PS roller section.

Paper with images transferred on it in the transfer section is passed to the fusing section, and discharged to the face-up tray or the face-down tray.

(2) Electrical section and mechanical section

a. Cassette paper feed, paper transport, and paper exit sections

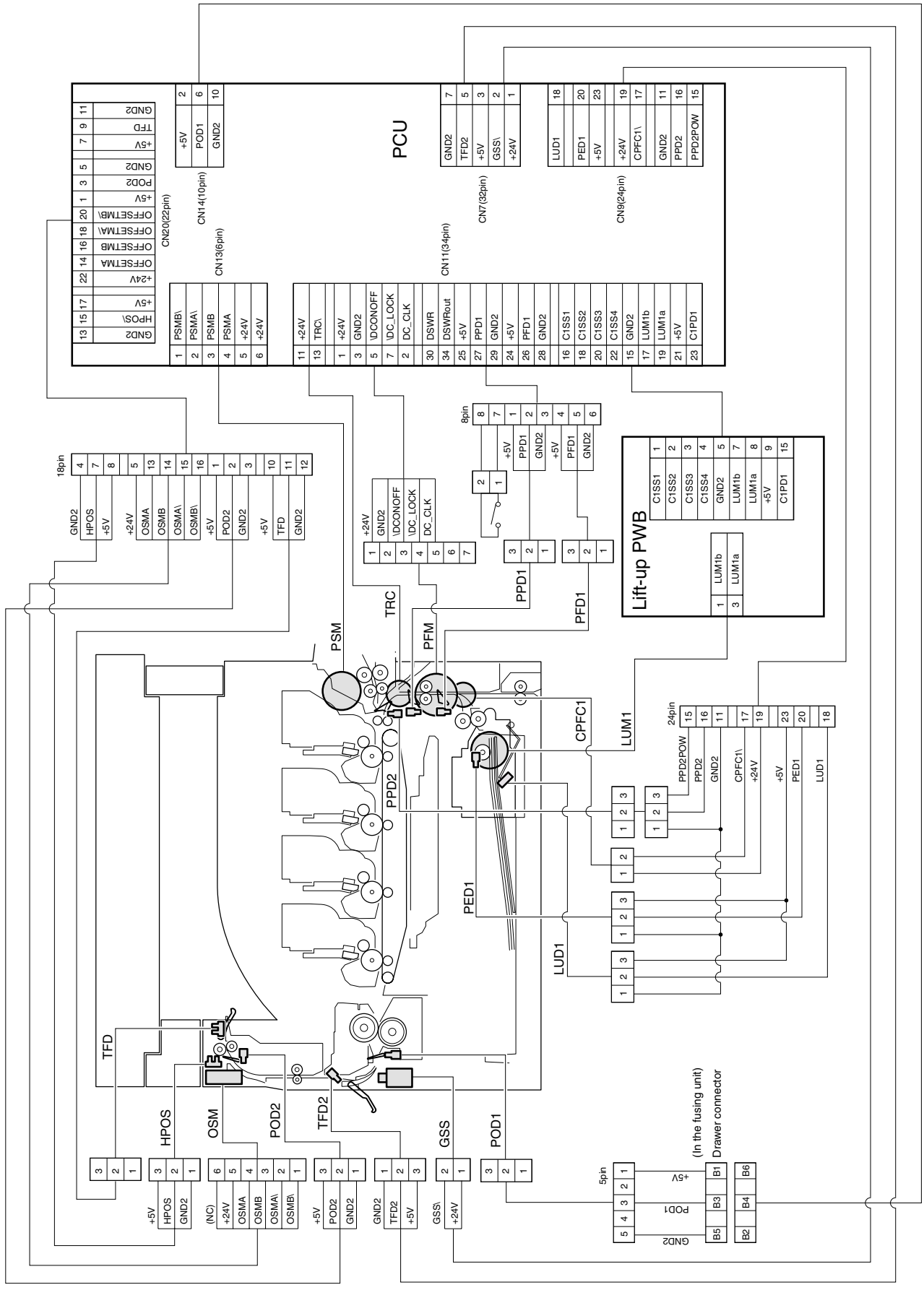

b. Manual paper feed section

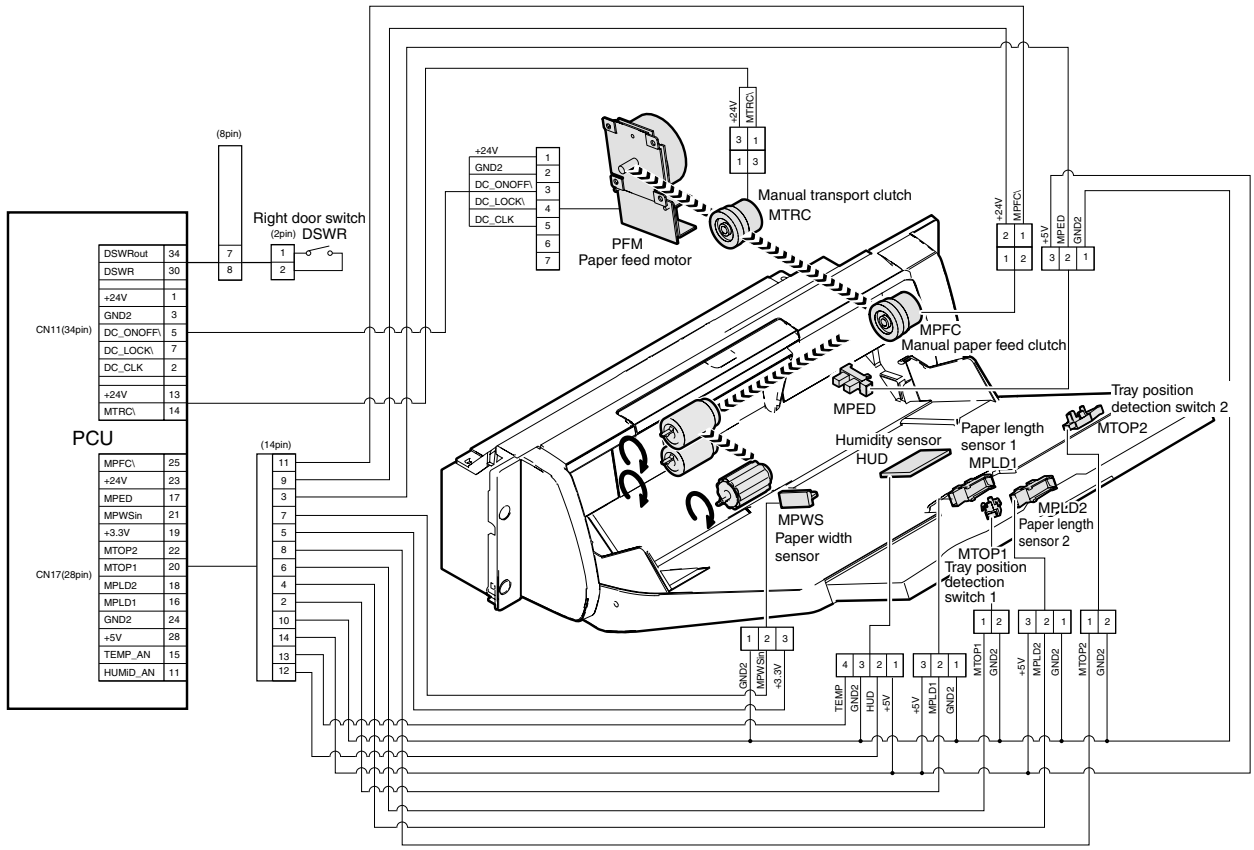

(3) Major parts and signals functions and operations

a. Manual paper feed unit

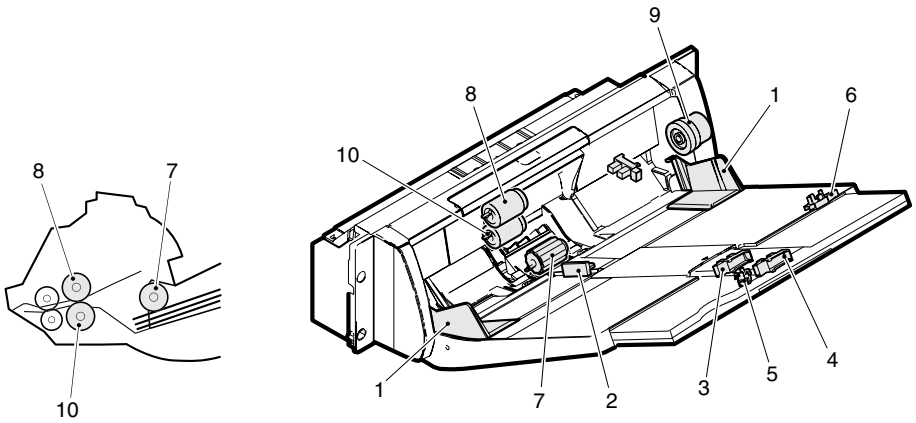

No.	Name	Code, Signal name	Function
RW	Paper detector	MPED	Detects paper empty/presence in the paper tray.
1	Paper size (width) adjuster	—	Adjusts the paper position.
2	Paper size (width) sensor	MPWS	Detects the paper width.
3	Paper size (length) detector	MPLD1	Detects the paper length.
4	Paper size (length) detector	MPLD2	Detects the paper length.
5	Tray position detector	MTOP1	Detects the paper tray position.
6	Tray position detector	MTOP2	Detects the paper tray position.
7	Paper pickup roller	—	Sends paper to the paper feed roller.
8	Manual paper feed roller	—	Feeds paper to the paper transport section.
9	Manual paper feed clutch	MPFC	Transmits the paper feed drive motor power to the manual paper feed roller.
10	Separation roller	—	Separates paper and transmits it to the paper feed unit.
RW	Manual transport clutch	—	Transmits the paper feed motor power to the manual paper feed unit.
RW	Paper feed motor	—	Drives the paper feed section and the manual paper feed unit.

RW: Abbreviation of Related Wiring, which means the said load is specified in the related figure of the mechanical and the electrical sections.

b. Paper tray lift unit

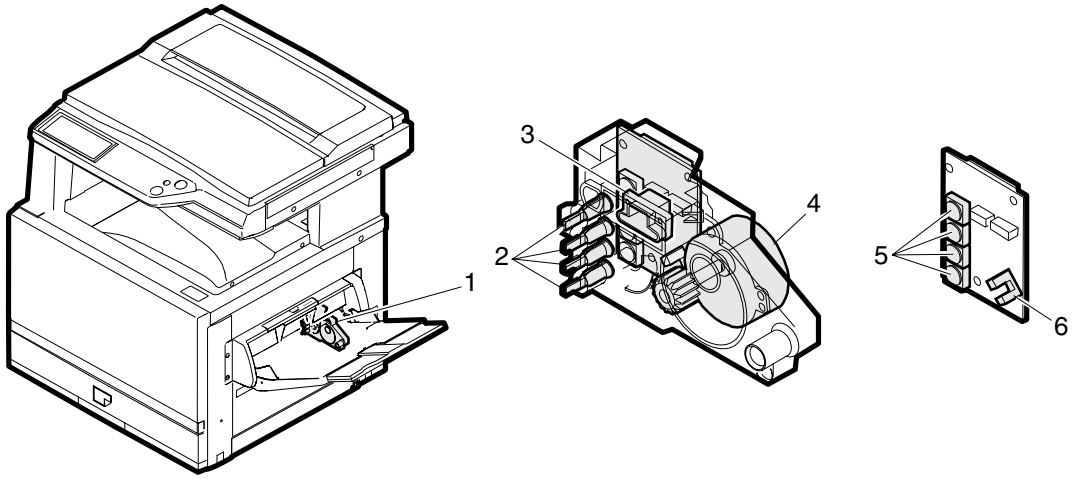

No.	Name	Code, Signal name	Function
1	Paper tray lift unit	—	Drives the paper tray lift plate.
2	Paper size detection actuator	—	Transmits the status data (âöìþ) of the paper size block to the paper size detector.
3	Paper tray lift unit control PWB	—	Controls the paper tray lift unit.
4	Lift motor	LUMx	Drives the lift plate.
5	Paper size detector (switch)	CxSSx	Detects the paper size set by the paper size set block.
6	Lift position sensor	CxPDx	Detects the lift plate position.

c. Paper feed unit

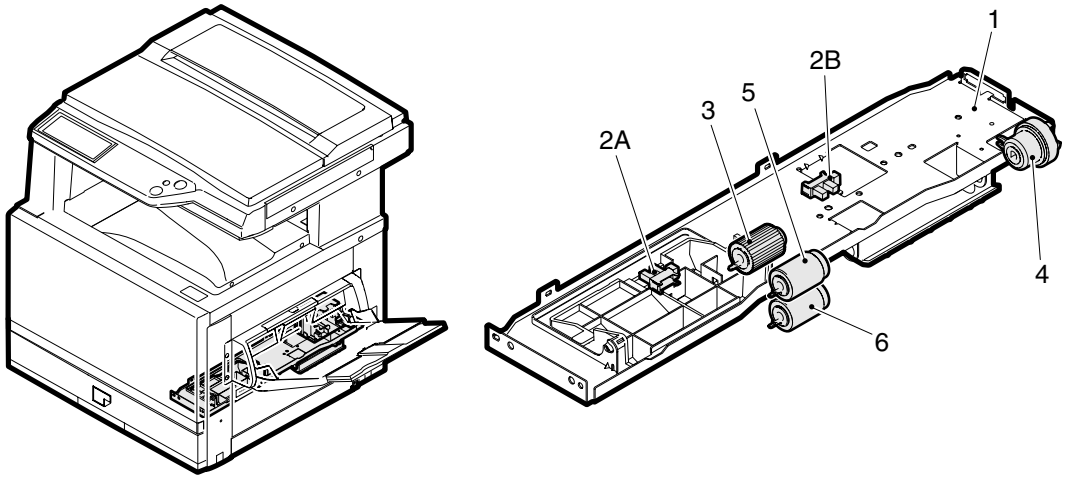

No.	Name	Code, Signal name	Function
1	Paper tray paper feed unit	—	Feeds paper from the paper tray to the transport section.
2A	Paper empty detector	PEDx	Detects paper empty in the paper tray.
2B	Paper upper limit detector	LUDx	Detects the paper upper limit position. (Keeps the friction between the paper pickup roller and paper at a constant level.)
3	Paper pickup roller	—	Feeds paper to the paper feed roller.
4	Paper feed clutch	CPFCx	Controls ON/OFF of the paper feed roller.
5	Paper feed roller	—	Feeds paper to the paper transport section.
6	Separation roller	—	Separates paper to prevent against double feed.

d. Paper exit section

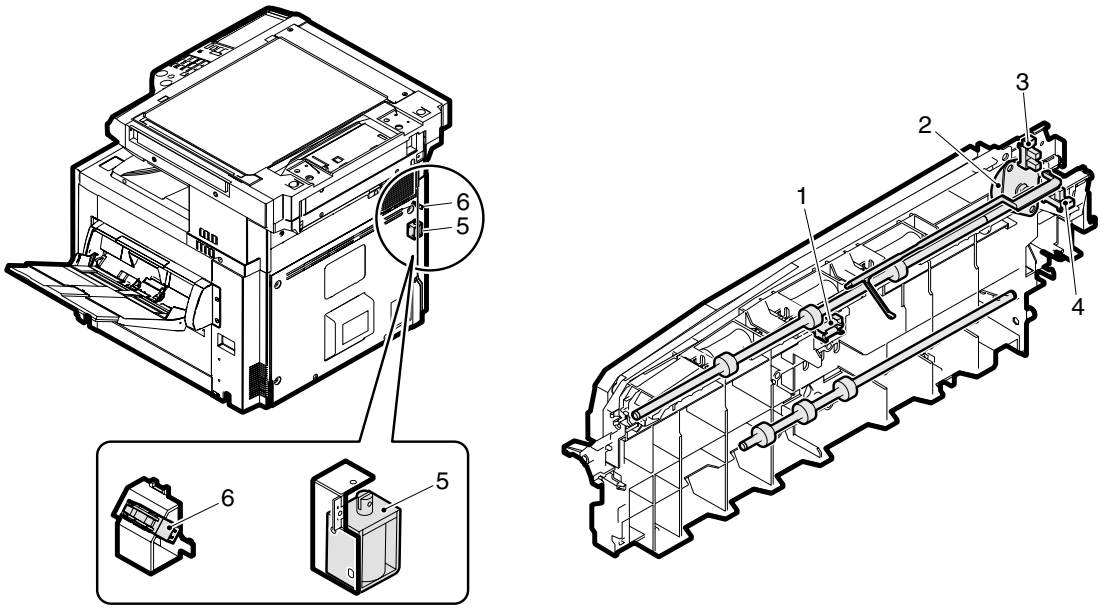

No.	Name	Code, Signal name	Function
1	Paper exit sensor	POD2	Detects discharged paper.
2	Offset motor	OSM	Drives the paper exit offset.
3	Shifter home position sensor	HPOS	Detects the offset home position.
4	FD paper exit full sensor	TFD	Detects the face-down paper exit tray full.
5	Paper exit switch gate solenoid	GSS	Drives the face-up/down switch gate.
6	FU paper exit full sensor		

(4) Operational descriptions

a. Paper feed tray section operation

The paper pickup roller moves up and down to press paper and separates the top paper, which is fed to the paper feed roller.

The paper feed roller feeds paper to the paper transport section. The separation roller prevents against double feed.

Up and down movement of the pickup roller is driven by the pickup solenoid, and ON/OFF control of the pickup roller and the paper feed roller is performed by the paper feed clutch.

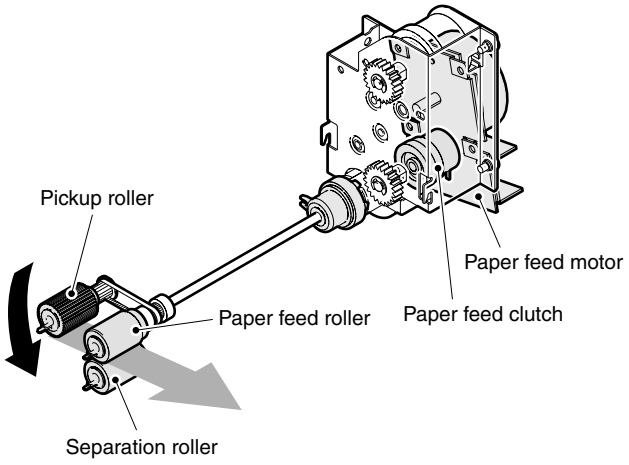

The paper lift plate lifts paper to control the upper limit position of paper so that the pressure between the top paper and the pickups roller remains constant. Lifting is performed by the lift motor and the lift gear.

The lift position is detected by the paper upper limit detector to control the pressure between the top paper and the pickup roller.

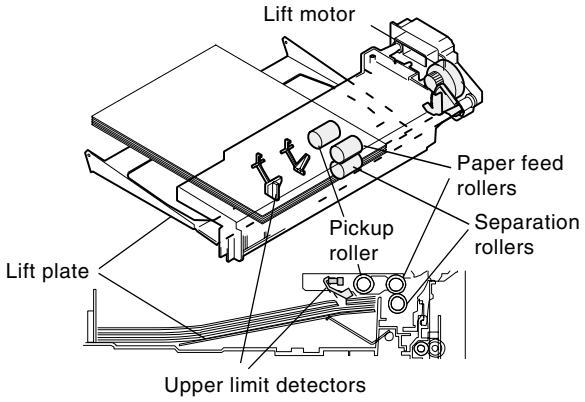

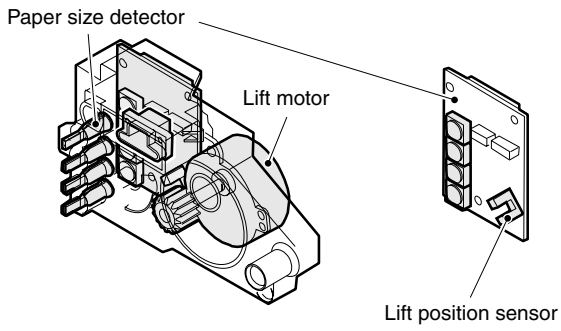

The paper feed tray is provided with the paper size detection block, and the status (âöìþ) of this block is detected with the combination of ON/OFF of the four paper size detectors to recognize the paper size.

Relationship between the paper size detector and the paper size

Paper size detector				Paper size		
				Destination		
CSS4	CSS3	CSS2	CSS1	Japan	AB series	Inch series
ON	OFF	OFF	ON	A3	A3	11 x 17
OFF	OFF	ON	ON	B4	B4	8.5 x 14
ON	OFF	ON	OFF	A4R	A4R	11 x 8.5R
OFF	ON	ON	OFF	A4	A4	11 x 8.5
OFF	ON	ON	ON	B5R	B5	INVOICE
OFF	ON	OFF	ON	B5	A5	FOOLSCAP
ON	ON	ON	OFF	A5	11 x 8.5	A4
ON	ON	OFF	OFF	EXTRA	EXTRA	EXTRA
Patterns other than above				Recognized that the paper tray is not inserted.		

EXTRA: Operates with the paper size set by the user program.

The lift position sensor detects the lift plate lower limit position. Then lift-up operation is started, and the rotation of the lift motor up to detection of the upper limit by the paper upper limit detector is used to calculate the paper remaining quantity.

b. Manual paper feed section operation

The paper pickup roller moves up and down to press paper and separates the top paper, which is fed to the paper feed roller.

The paper feed roller feeds paper to the paper transport section. The separation roller prevents against double feed.

The manual paper feed clutch controls ON/OFF of the pickup roller and the paper feed roller.

The manual transport roller transports paper to the resist roller.

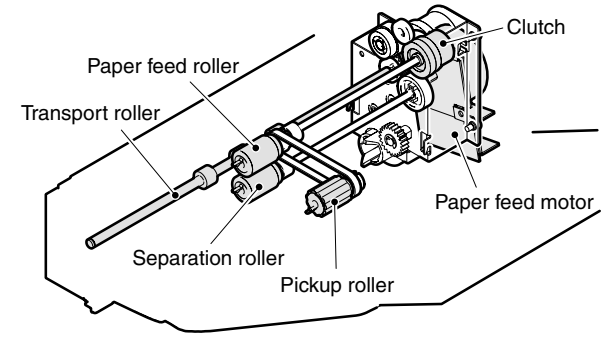

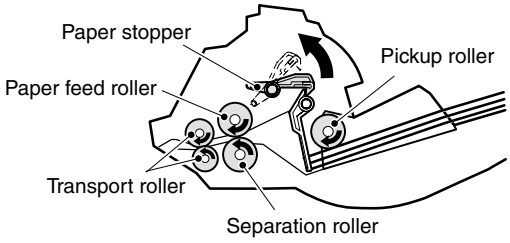

The paper size is detected by the paper length detector and the paper width sensor.

A volume-type sensor is used as the paper width sensor. The resistance varies according to variation of the paper guide position to detect the paper width.

The tray position detector detects that the paper tray is set to the maximum length position or to the minimum length position.

When the paper tray is set to the maximum length position, the paper length detector is forcibly turned ON. This is to recognize it.

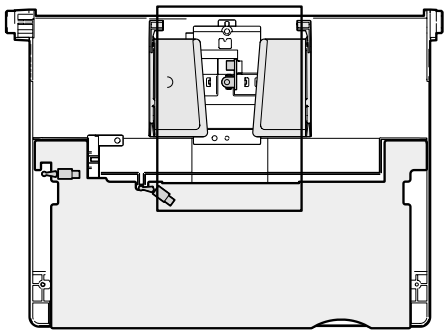

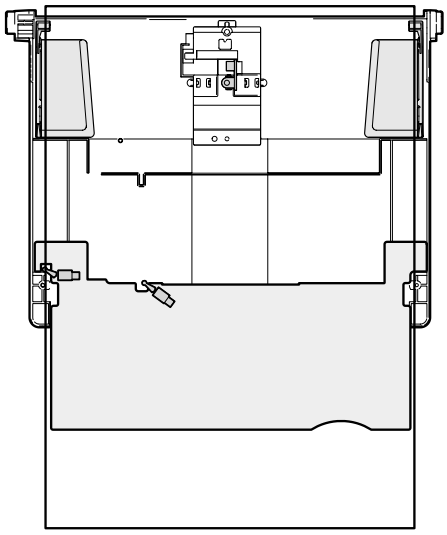

c. Paper transport section

This section transports paper from each paper feed section to the transfer section (resist roller) by two transport rollers.

The paper transport clutch controls ON/OFF of each transport roller.

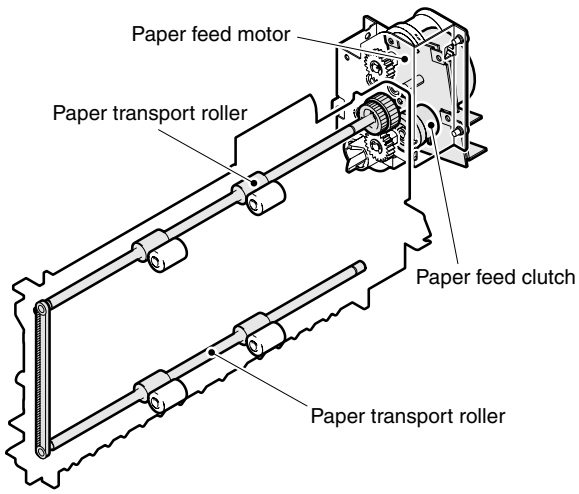

d. Paper resist section

The resist roller controls the relative position of the transported paper and the transfer image.

The resist roller is driven by the resist roller motor.

The relative position of paper and the transfer image is determined by the ON timing of the resist roller motor.

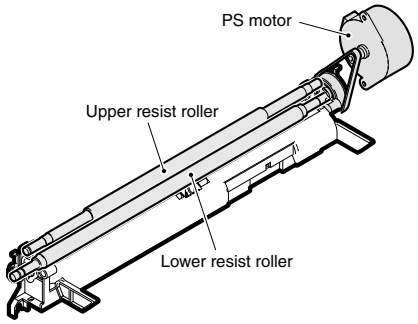

e. Others

* The paper transport section is provided with two paper detectors, which perform the following functions:

1) Paper jam detection
2) Output of the reference signal for the operating timing of each load

B. Disassembly/assembly/maintenance

(1) Paper feed/transport sections maintenance target parts

×: Check (Clean, replace, or adjust as necessary.) ❍: Clean ▲: Replace ∆: Adjust ☆: Lubricate ❑: Shift position

Unit name	No.	Part name	When calling	50K	100K	150K	200K	250K	300K	350K	400K	Remark
Paper feed section	1	Paper feed rollers in the cassette section	❍	❍	×	❍	×	❍	×	❍	×	Replace at the specified count at each paper feed port or within 2 years.
	2	Torque limiter	×		×		×		×		×	
	3	Paper feed rollers in the manual paper feed section	❍	×	×	×	×	×	×	×	×	Replace at the specified count at each paper feed port or within 2 years.
	4	Torque limiter	×	×	×	×	×	×	×	×	×	
Transport section	5	Transport rollers	❍	❍	❍	❍	❍	❍	❍	❍	❍	
	6	Transport paper guide	❍	❍	❍	❍	❍	❍	❍	❍	❍	

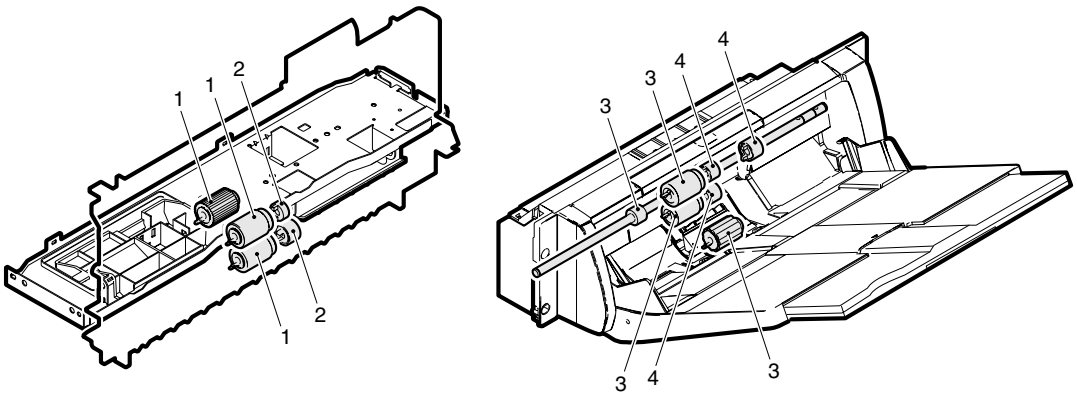

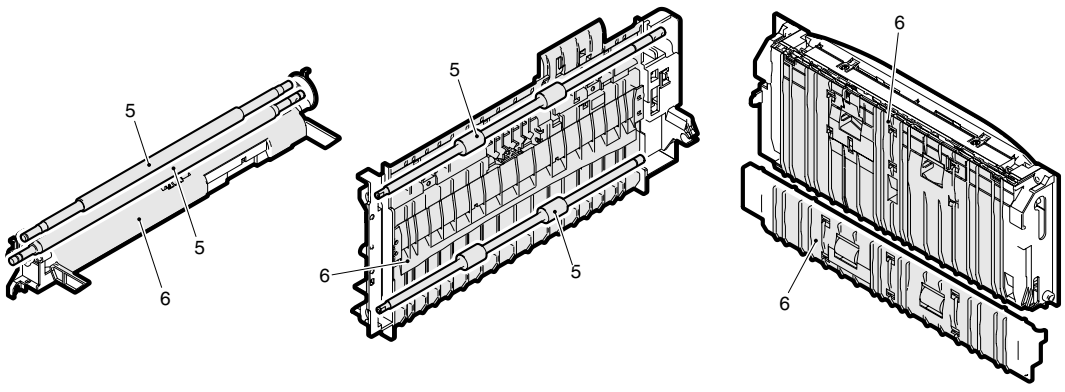

(2) Maintenance parts and major parts replacement

a. Cassette paper feed

<1> Pickup roller

1) Remove the cassette.

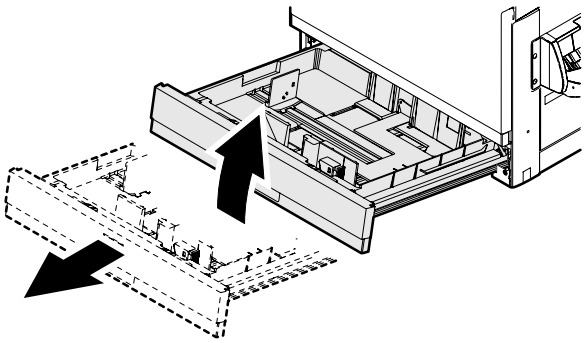

2) Disengage the pawl, and remove the pickup roller.

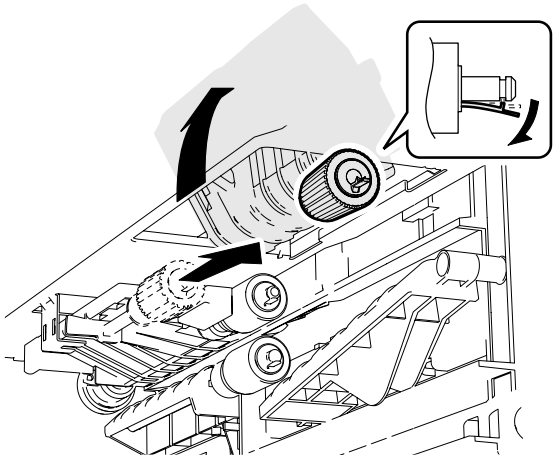

Note: Do not remove the transfer belt unit.

<2> Paper feed roller, torque limiter

1) Remove the cassette.
2) Disengage the pawl, and remove the paper feed roller.

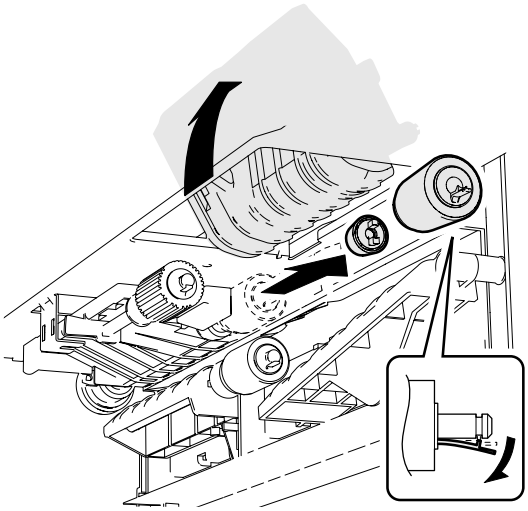

<3> Paper separation roller, torque limiter

1) Remove the cassette.
2) Disengage the pawl, and remove the paper separation roller.

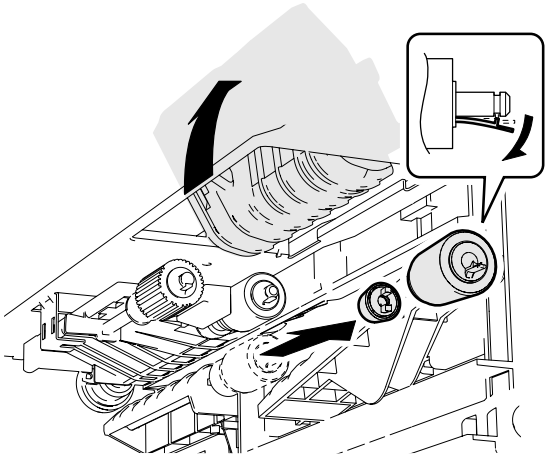

<4> Cassette paper feed unit

1) Open the front cabinet, and remove the drum unit.

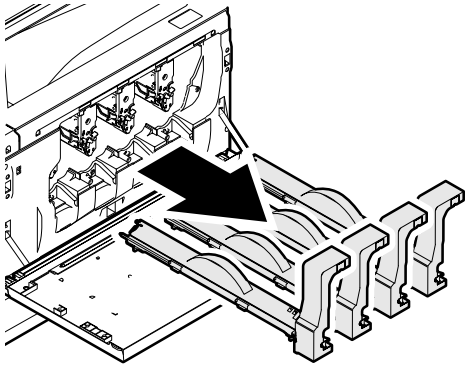

2) Remove the developing unit.

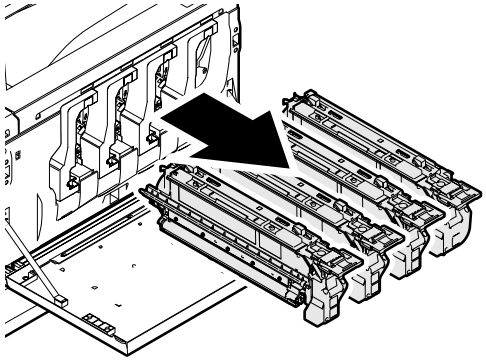

3) Remove the front cabinet and the front frame cover.
4) Remove the multi manual paper feed unit.
5) Remove the connection right cabinet, the rear cabinet, and the rear right cabinet.
6) Remove the screw and the paper feed unit. Remove the connector.

* When assembling, fit the positioning pin A with section C.

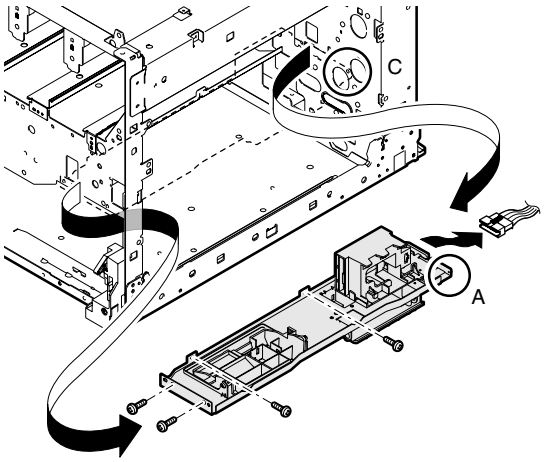

<5> Paper feed drive motor

1) Remove the screw, the rear cabinet, the rear right cabinet, and the connection right cabinet B.
2) Remove the screw, and remove the paper feed drive motor.

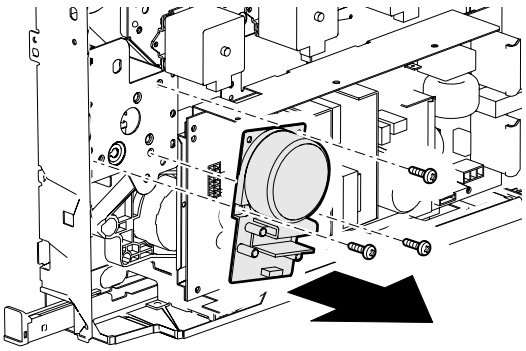

<6> Paper feed drive unit

1) Remove the harness and the screw, and remove the paper feed drive unit.

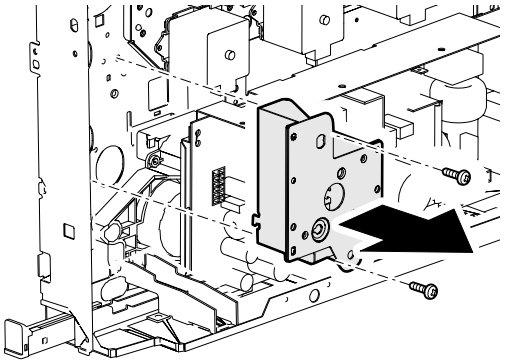

b. Multi manual paper feed

<1> Pickup roller

1) Open the arm cover (A). Disengage the pawl, and remove the pickup roller (B).

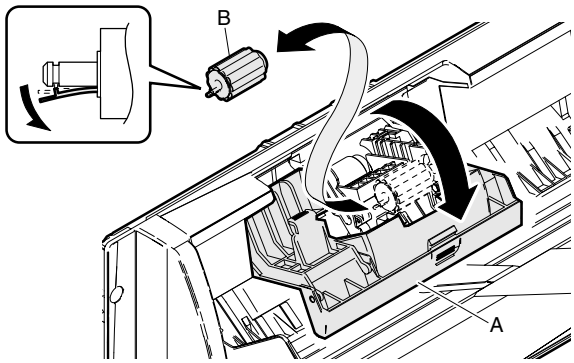

<2> Paper feed roller

1) Open the arm cover (A), open the auxiliary PG (B), and remove the paper feed roller (C).

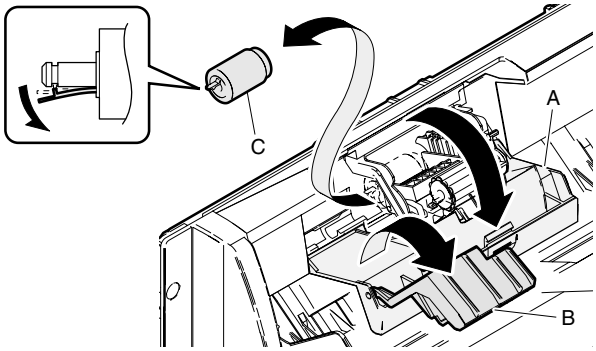

<3> Paper separation roller

1) Open the vertical transport guide.

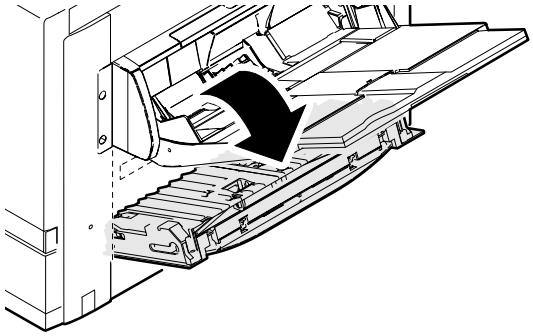

2) Open the maintenance cover (A) from the bottom of the multi paper feed unit. Disengage the pawl and remove the paper feed separation roller (B).

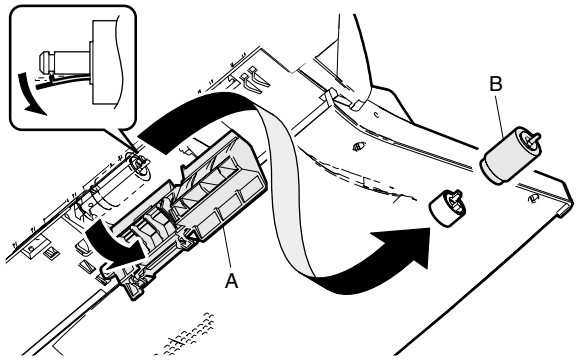

<4> Multi manual paper feed unit

1) Remove the screw and the harness, and remove the multi paper feed unit.

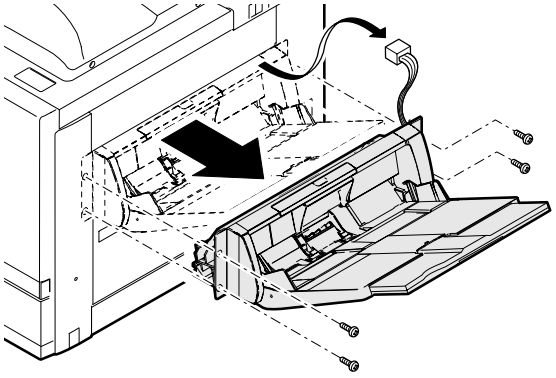

<5> Paper feed clutch

1) Remove the screw and the cover (A). Remove the connector and the E-ring, and remove the paper feed clutch (B).

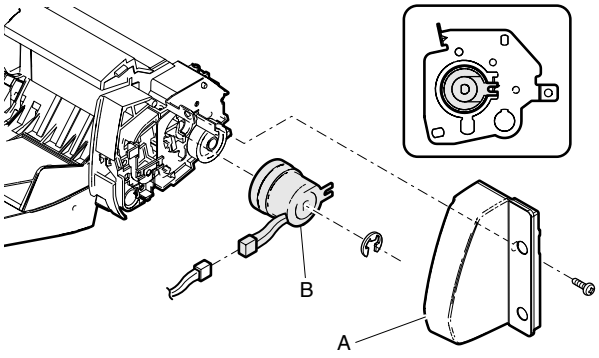

<6> Transport roller

1) Remove the bottom lid (A), remove the connector and the screw, and remove the cover (B).

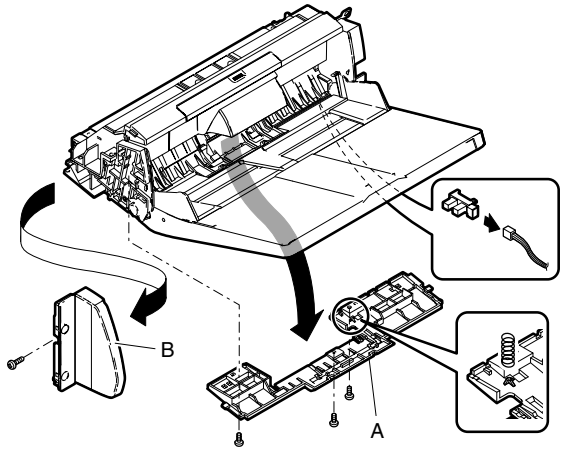

* When assembling, fit the cover projection with the spring.

2) Remove the screw, and remove (A) and (B).
   * When assembling, first attach (A), then attach (C) and (D).

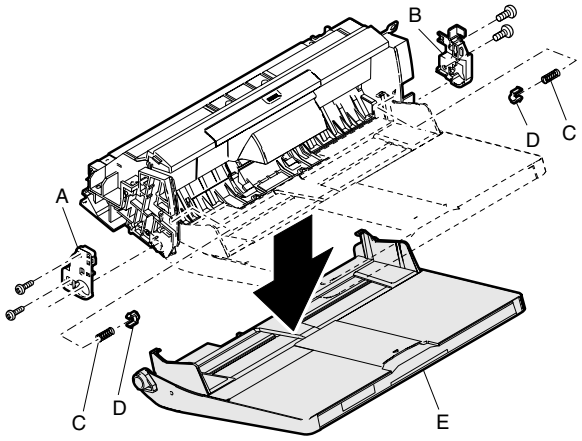

3) Remove the screw and the E-ring, and remove the angle (A) and the gear.

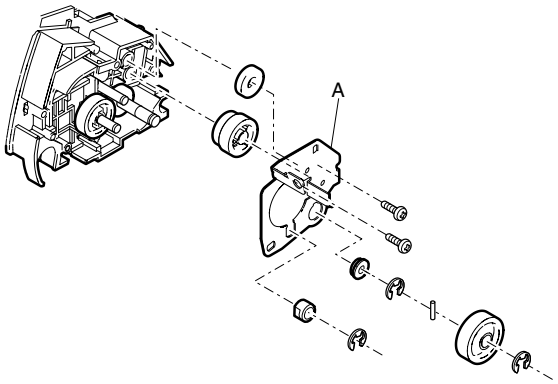

4) Remove the screw, and remove (A) and the manual upper unit (B).

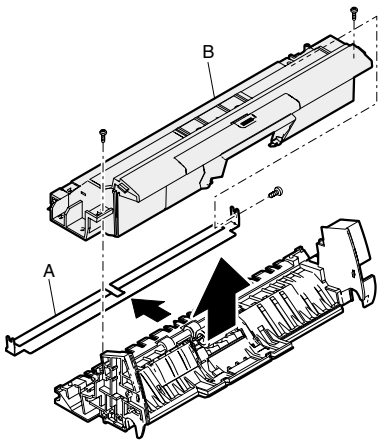

5) Remove the E-ring, the gear, and the bearing, and remove the transport roller.

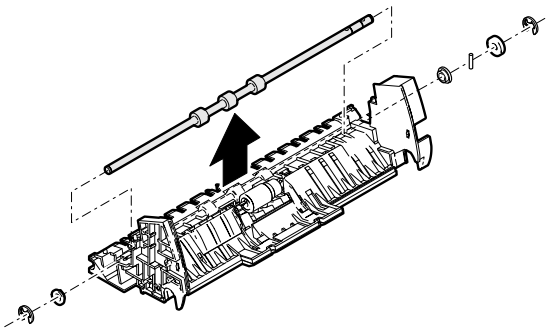

c. Transport section

<1> Vertical transport unit

1) Remove the drum and the developing unit.
2) Remove the front cabinet.
3) Remove the front frame cover.
4) Remove the multi manual paper feed unit.
5) Remove the rear cabinet, the connection right cabinet, the rear right cabinet, the front right cabinet, and the right lower cabinet.
6) Open the vertical transport guide. Remove the screw and remove the vertical transport guide unit.

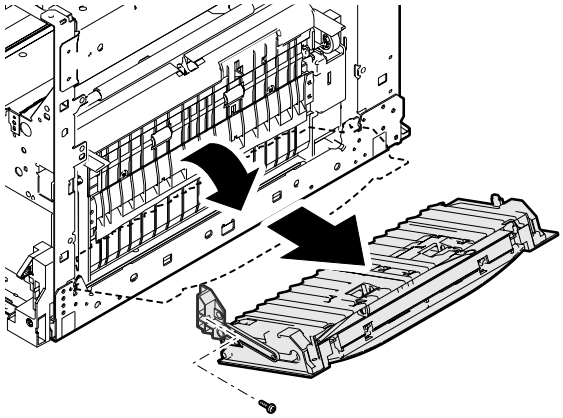

7) Remove the screw, and remove the vertical transport lower unit.

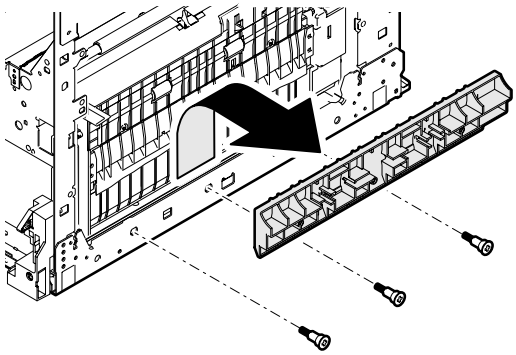

8) Remove the paper feed drive motor, and remove the connector on the rear side. Remove the screw, and shift the vertical transport unit to the left to remove.
   * When assembling, engage the four bosses indicated with ○ in the figure below.

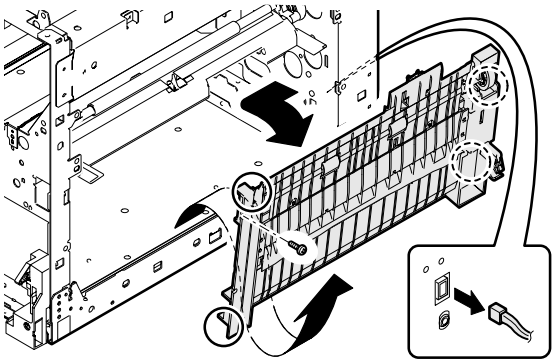

<2> Transport roller 2

1) Remove the vertical transport unit.
2) Remove the screw, and remove the paper guide (A).
3) Remove the resin ring, and remove the pulley (B) from the belt.
4) Remove the resin E-ring, slide the bearing (C), and remove the transport roller 2 unit (D).

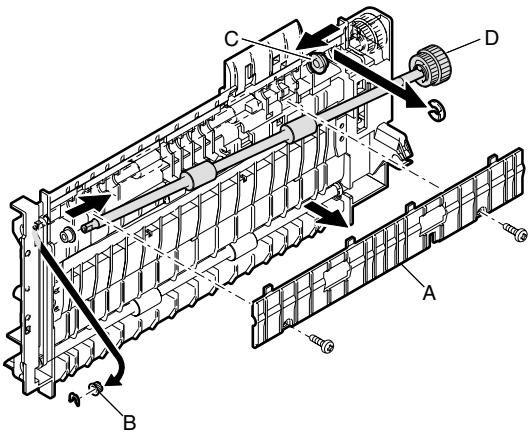

5) Remove the E-ring and parts, and remove the transport rollers.

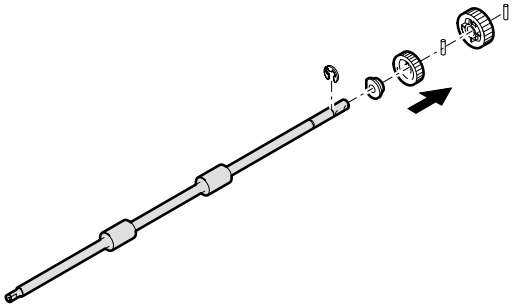

<3> Transport roller 1

1) Remove the vertical transport unit.
2) Remove the resin ring. Remove the pulley (A) from the belt.
3) Remove the resin E-ring, slide the bearing (B), and remove the transport roller 1 (C).

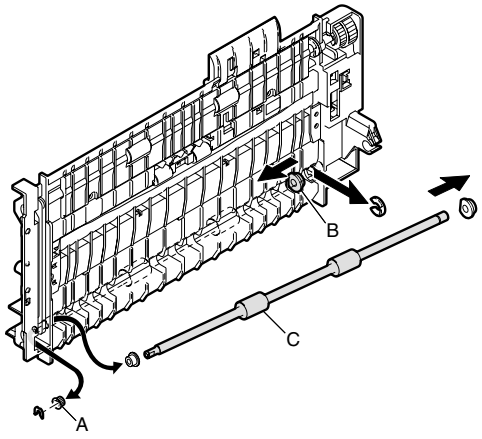

<4> PS unit

1) Remove the vertical transport unit.
2) Remove the screw and the spring. Release the lock. Remove the belt and remove the PS unit.
   * When assembling, attach from the left with avoiding the plate in section A.

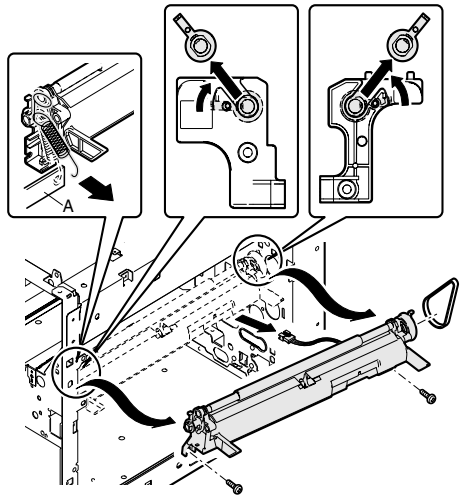

<5> Upper resist roller

1) Remove the vertical transport unit.
2) Remove the PS unit.
3) Remove the spring (A), and remove the upper resist roller (B).

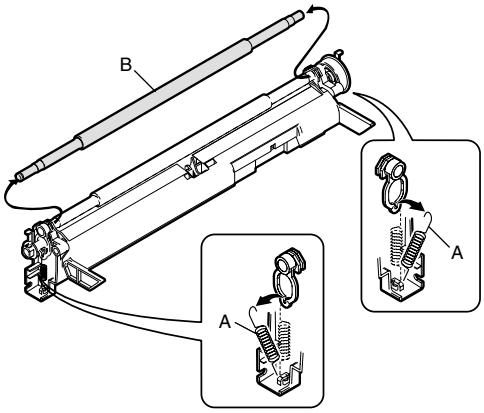

<6> Lower resist roller

1) Remove the vertical transport unit.
2) Remove the PS unit.
3) Remove the upper resist roller.
4) Remove the parts and remove the lower resist roller.

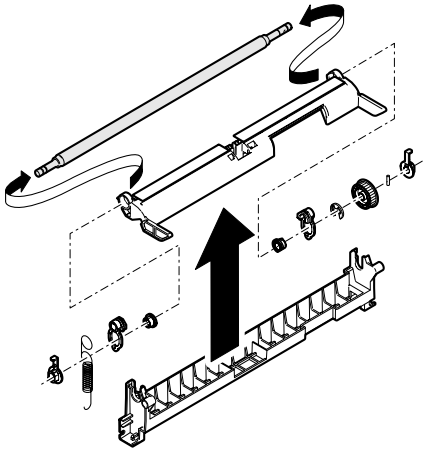

<7> PS motor

1) Remove the rear cabinet, the connection right cabinet, and the rear right cabinet.
2) Remove the connector and the screw, and remove the process exhaust fan unit. Remove the connector and the screw, and remove the PS motor.

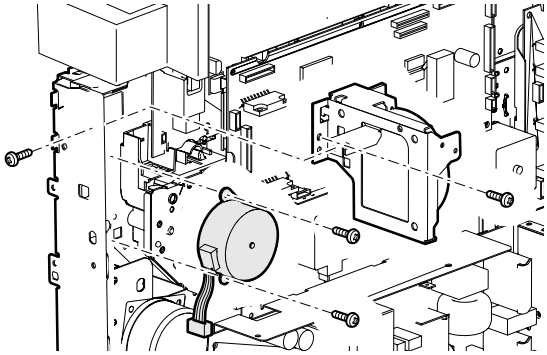

d. Paper exit section

<1> Slide drive motor

1) Open the left cabinet.
2) Remove the FD connection cabinet.
3) Remove the connector and the screw, and remove the motor unit.

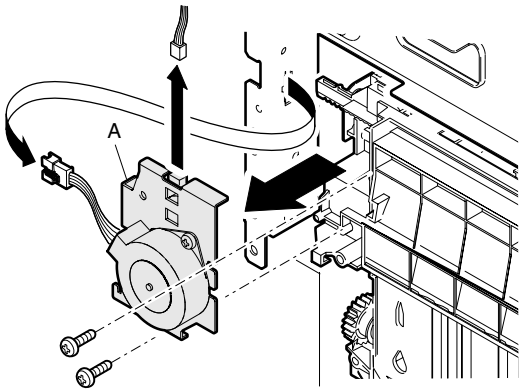

4) Remove the connector and the screw, and remove the motor (A).

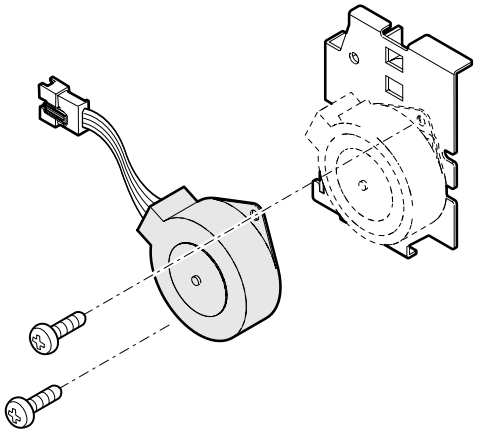

<2> FD paper exit unit

1) Remove the rear cabinet, the rear cabinet upper, the left cabinet, the rear left cabinet lid, the rear left cabinet, and the front cabinet upper.
2) Remove the motor unit.
3) Slide section (A) to the front side. Remove the screw, and disengage the pawl in section (B). Remove the FD paper exit unit (C) from the rear side and remove the connector.
   * When assembling, attach from the front side.
   * When assembling, be careful not to damage the actuator (D).

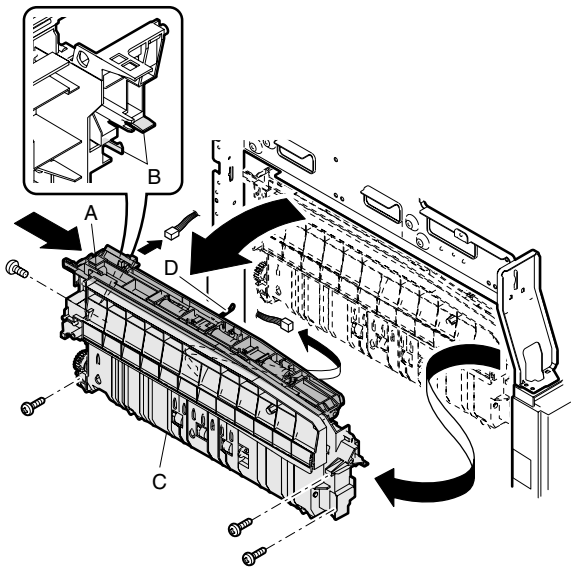

<3> FD paper exit roller B

1) Remove the cabinet.
2) Remove the paper exit unit.
3) Remove the E-ring, the bearing, and the gear. Remove the FD paper exit roller.

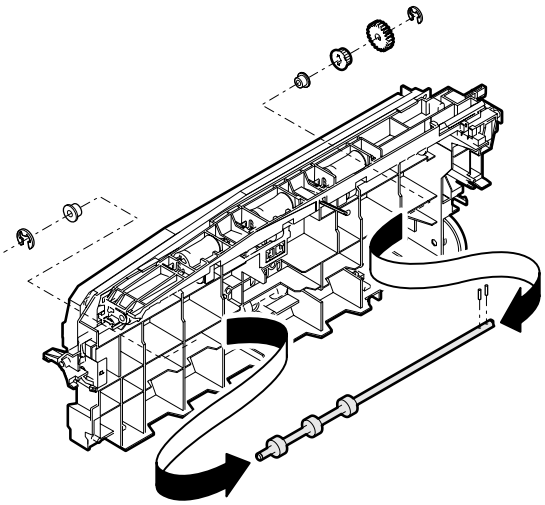

<4> FD paper exit roller A

1) Remove the cabinet.
2) Remove the paper exit unit.
3) Remove the E-ring, (A), the screw, (B), (C), and the bearing. Remove the unit (D).

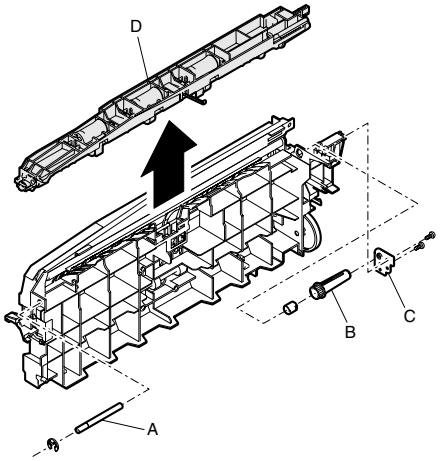

4) Remove the E-ring and the bearing, and remove the FD paper exit roller (A).

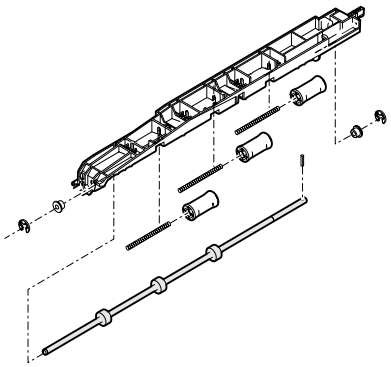

e. Gate solenoid unit

1) Open the left door, and remove the rear cabinet and the rear left cabinet.
2) Remove the driver PWB unit.
3) Remove the connector and the screw, and remove the gate solenoid unit.

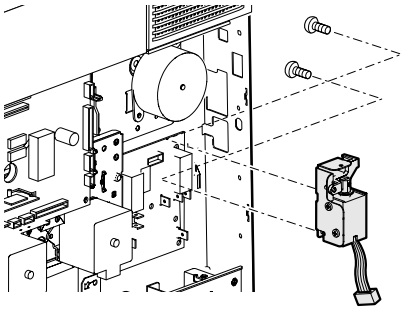

f. Lift-up unit

1) Remove the rear cabinet and the rear right cabinet.
2) Remove the power PWB unit.
3) Remove the connector and the screw, and remove the lift-up unit.

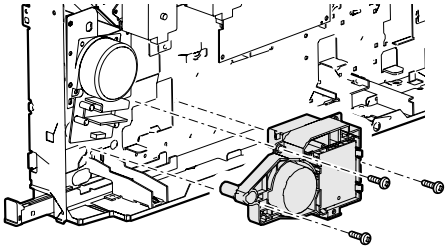

6. Operation panel

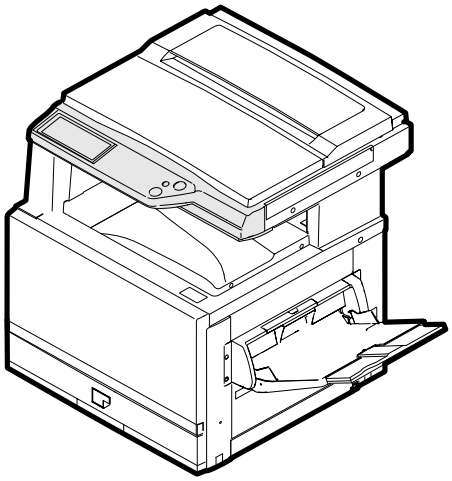

A. Operational descriptions

(1) Outline

The operation panel unit is composed of the operation key PWB, the inverter/LVDS PWB, the LCD unit, and the operation keys, and is used to operate the machine and to set and display the machine status.

The operation key PWB is connected to the ORS light receiving PWB for detecting the document size. It receives light from the ORS light emitting PWB attached to the rear frame, detecting the document size.

(2) Electrical section and mechanical section

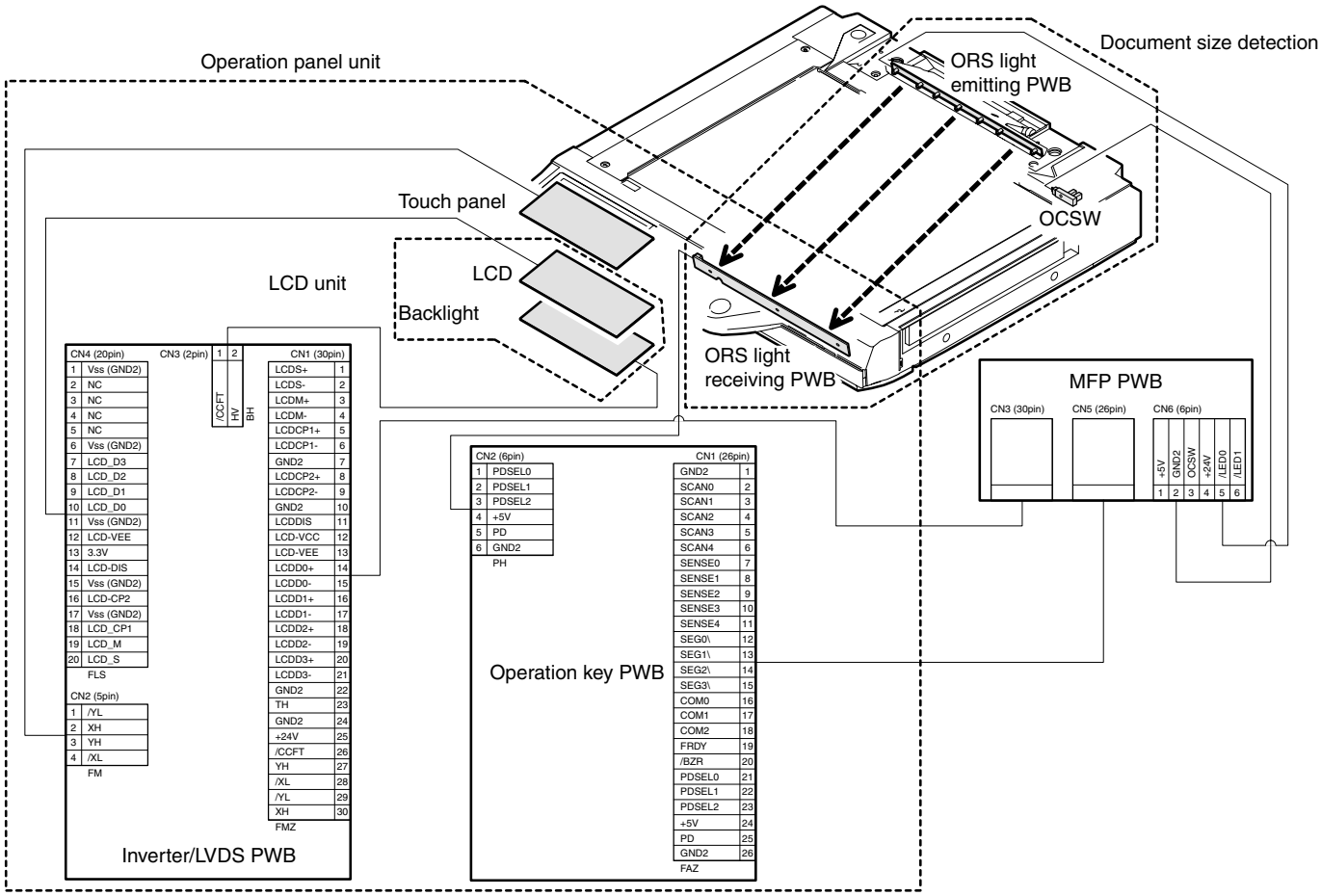

(3) major parts functions and operations

No.	Name	Code, signal name	Function
RW	Operation key PWB	—	Detects a pressed key on the operation panel.
RW	Inverter/LVDS PWB	—	Drives the LCD and the backlight, and controls the touch panel.
RW	ORS light receiving PWB	—	Receives light from the ORS light emitting PWB to detect the document size.
RW	ORS light emitting PWB	—	Emits light for detecting the document size.
RW	OC switch	OCSW	Timing switch for detecting the document size

RW: Abbreviation of Related Wiring, which means the said load is specified in the related figure of the mechanical and the electrical sections.

B. Disassembly/assembly/maintenance

a. ORS light emitting PWB

1) Remove the upper cabinet rear cover and the upper cabinet rear unit.
2) Remove the screw, and remove the document size sensor unit. Remove the screw and the document size sensor, and remove the ORS light emitting PWB.

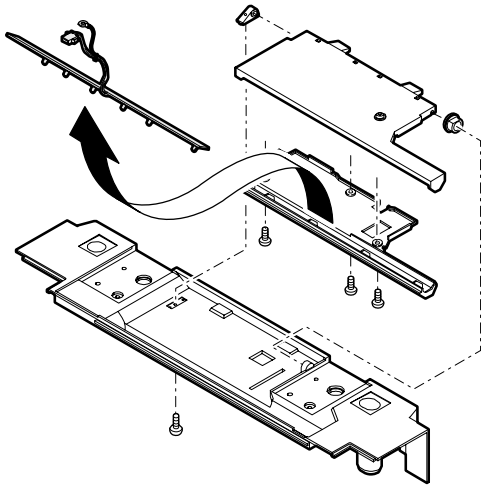

b. OCSW

1) Remove the upper cabinet rear cover and the upper cabinet rear unit.
2) Remove the connector and the screw, and remove the OCSW.

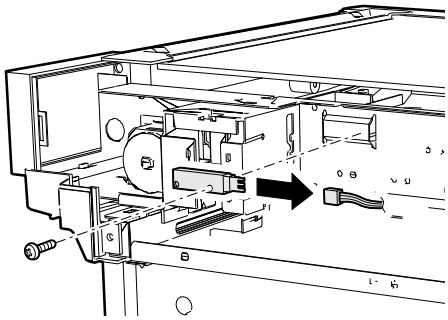

c. ORS light receiving PWB

1) Remove the FD connection cabinet, the front cabinet upper, the FD paper exit port cabinet, and the operation panel plate.
2) Remove the connector and the screw, and remove the ORS light receiving PWB.

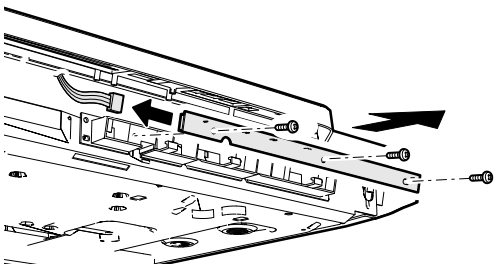

d. Operation key PWB

1) Remove the FD connection cabinet, the front cabinet upper, the FD paper exit port cabinet, and the operation panel plate.
2) Remove the screw, and remove A and B.
3) Remove the screw and the connector, and remove the operation unit.

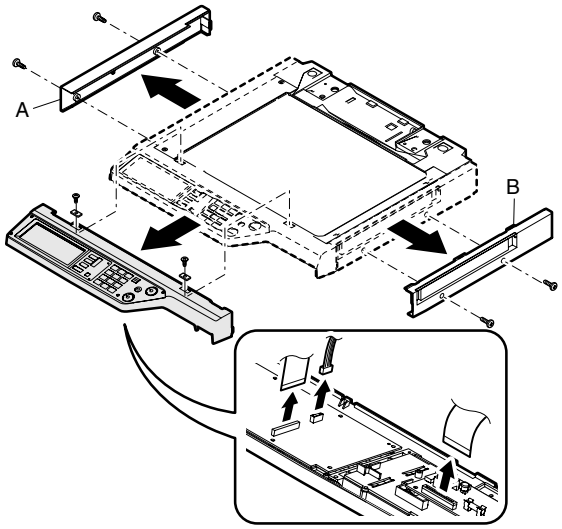

4) Remove the screw and remove the operation key PWB.

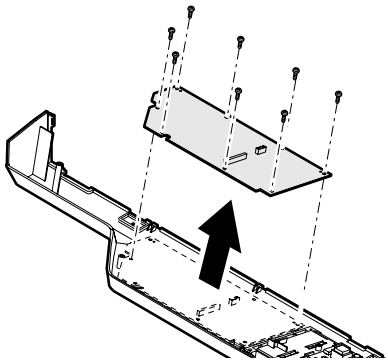

e. Inverter/LVDS PWB

1) Remove the FD connection cabinet, the front cabinet upper, the FD paper exit port cabinet, and the operation panel plate.
2) Remove the connector and the screw, and remove the inverter/ LVDS PWB.

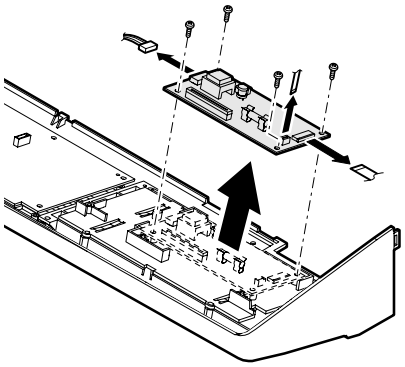

7. External fitting

A. Disassembly

(1) Cabinet disassembly 1

1) Open the front cabinet.
2) Remove the front cabinet band. Pull out the slide pin (B), and remove the front cabinet (C).

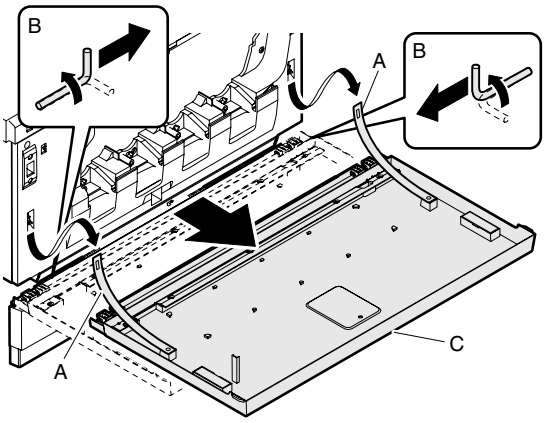

(2) Cabinet disassembly 2

1) Remove the front cabinet.
2) Open the left cabinet. Remove the screw and remove the front frame cover.

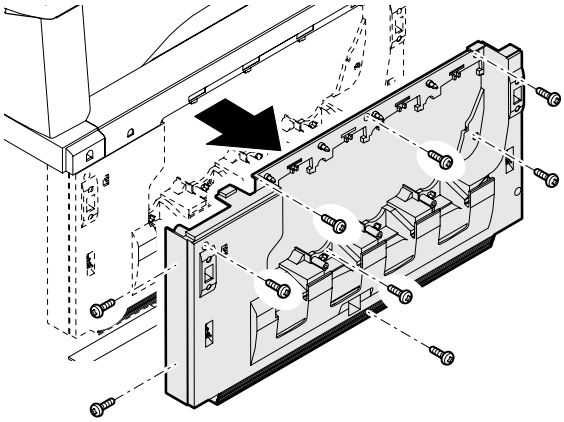

(3) Cabinet disassembly 3

1) Remove the screw, and slide the paper exit tray cabinet right to the right to remove.

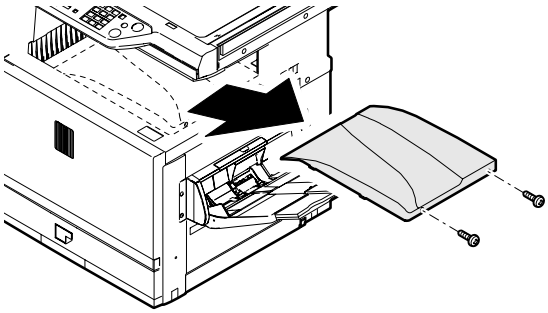

(4) Cabinet disassembly 4

1) Remove the screw, and remove the rear cabinet (A). Remove the screw, and remove the DC power CFM unit (B) and the connector. Remove the screw, and remove the ROM cover (C) and the rear connection cabinet (D).
   * When assembling, insert the boss in section E into the hole in the frame.

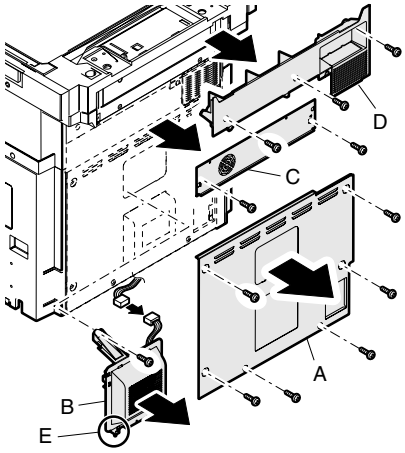

(5) Cabinet disassembly 5

1) Remove the rear cabinet.
2) Remove the screw (A), and slide the front right cabinet (B) upward to remove. Remove the screw, and slide the connection right cabinet (C), the rear right cabinet (D), and the right lower cabinet (E) upward to remove.

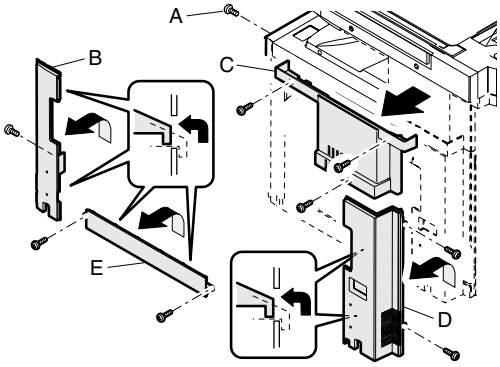

(6) Cabinet disassembly 6

1) Remove the rear cabinet.
2) Remove the screw, and remove the FD connection cabinet (A) and the front cabinet upper (B). Remove the screw, and slide the rear left cabinet lid (C) and the rear left cabinet (D) upper to remove.

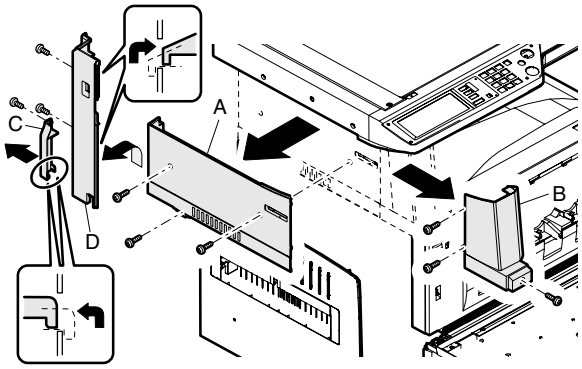

(7) Cabinet disassembly 7

1) Remove the screw, and remove the FD paper exit port cabinet (A) and the operation panel plate (B).

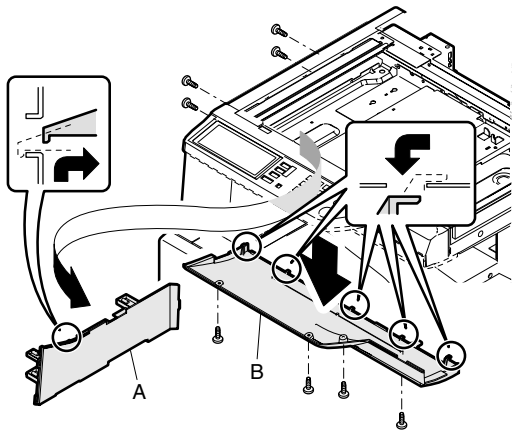

(8) Cabinet disassembly 8

1) Remove the screw, and remove the upper cabinet rear cover (A). Remove the connector and the screw, and remove the upper cabinet rear unit.

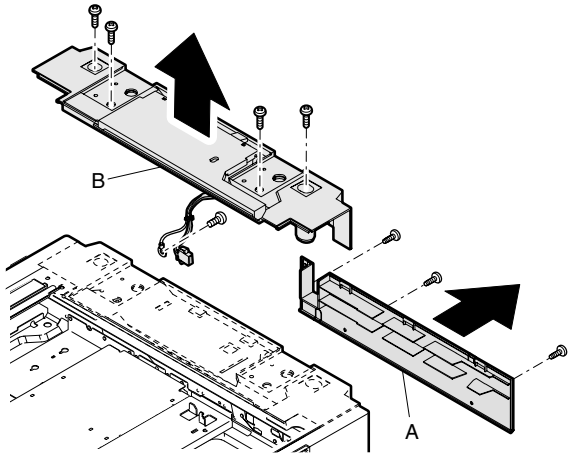

8. Others

A. Disassembly/assembly/maintenance

(1) Maintenance target parts

×: Check (Clean, replace, or adjust as necessary.) ❍: Clean ▲: Replace ∆: Adjust ☆: Lubricate ❑: Shift position

Unit name	No.	Part name	When calling	50K	100K	150K	200K	250K	300K	350K	400K	Remark
Filters	1	Ozone filter	×	▲	▲	▲	▲	▲	▲	▲	▲	
	2	Sub ozone filter	×	▲	▲	▲	▲	▲	▲	▲	▲	
Drive section	3	Gears	☆	☆	☆	☆	☆	☆	☆	☆	☆	
	4	Belts	×	×	×	×	×	×	×	×	×	
Others	5	Sensors	×		×		×		×		×	

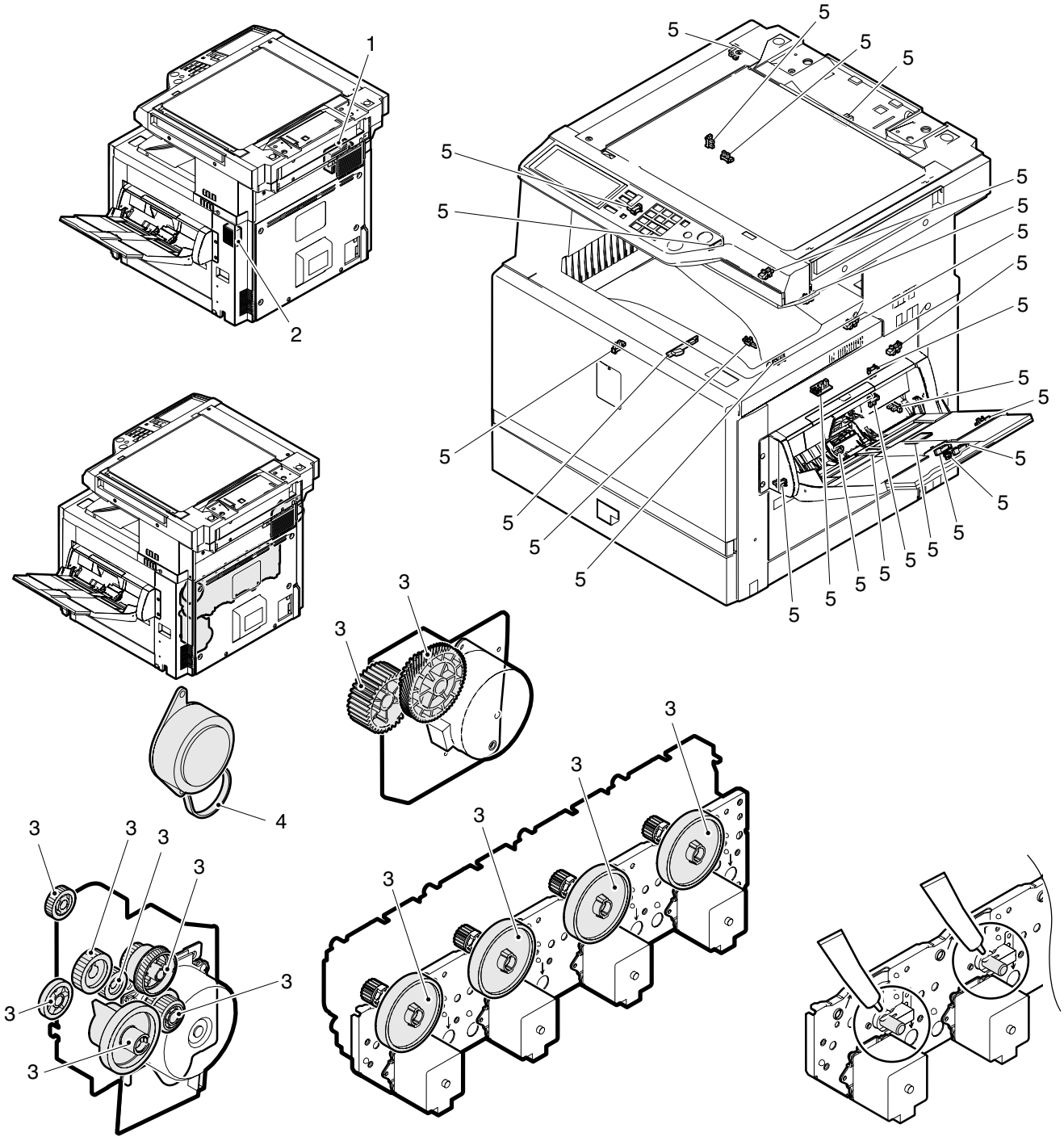

(2) Maintenance parts and major parts replacement

a. Ozone filter

1) Remove the ozone filter cover, and remove the ozone filter.

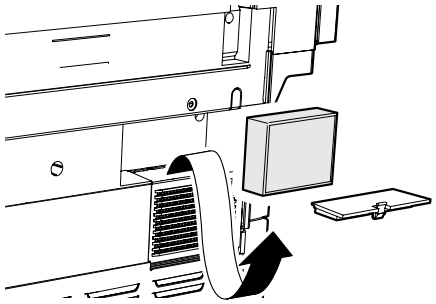

b. Sub ozone filter

1) Remove the sub ozone filter cover, and remove the sub ozone filter.

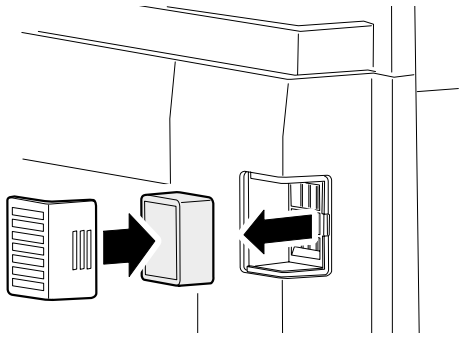

c. PWB

<1> PCU PWB

1) Remove the rear cabinet.
2) Remove the connector and the screw, and remove the PCU PWB.

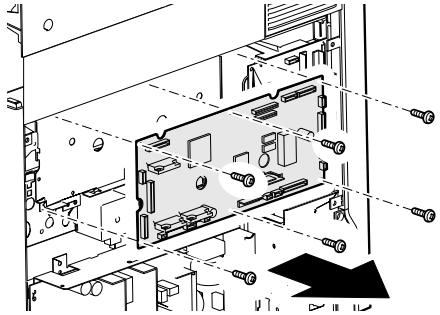

<2> High voltage MC power PWB

1) Remove the rear cabinet.
2) Remove the connector and the screw, and remove the PCU PWB unit.
3) Remove the connector and the screw, and remove the high voltage MC power PWB.

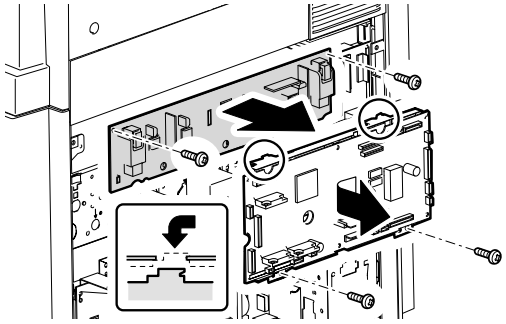

<3> Power PWB

1) Remove the rear cabinet and the DC power CFM unit.
2) Remove the connector and the screw, and remove the power PWB.

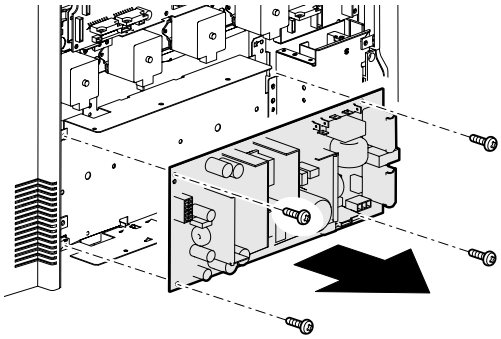

<4> Driver PWB

1) Remove the rear cabinet, the rear left cabinet lid, and the rear left cabinet.
2) Remove the screw and the connector, and remove the driver PWB.

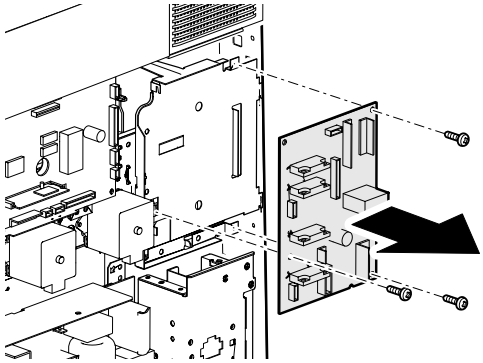

<5> AC PWB

1) Remove the screw, the rear cabinet, the rear left cabinet lid, and the rear left cabinet.
2) Remove the screw and the harness, and remove the driver PWB unit.

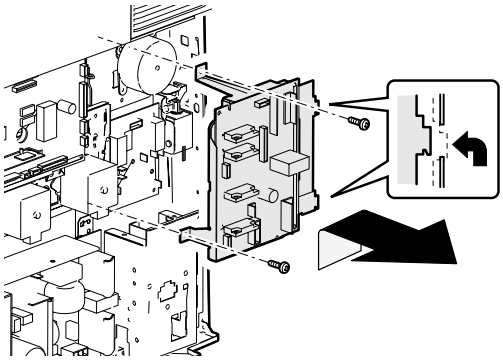

3) Remove the harness and remove the AC PWB from the supporter.

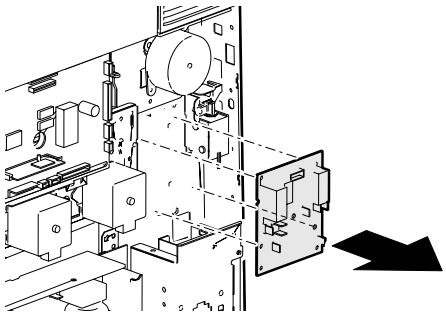

<6> High voltage TC power PWB

1) Remove the rear cabinet, the DC power CFM unit, the rear left cabinet lid, and the rear left cabinet.
2) Remove the connector, the harness, and the screw. Remove the Power PWB unit.

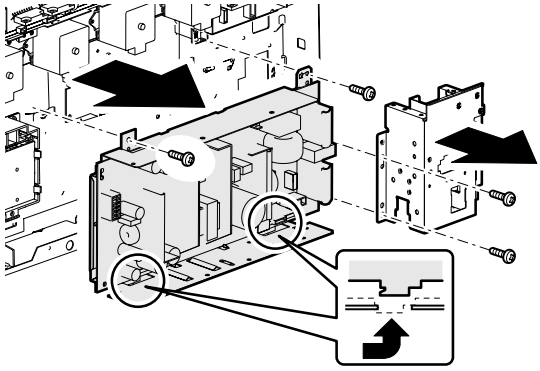

3) Remove the connector and the screw, and remove the high voltage TC power PWB.

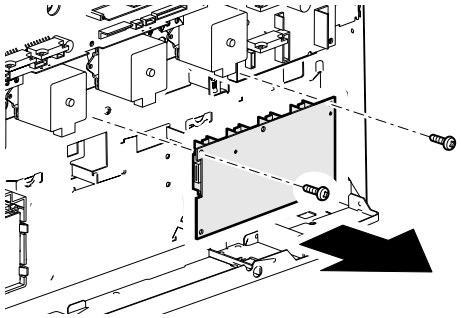

<7> ICU PWB

1) Remove the paper exit tray cabinet right.
2) Remove the screw, and remove the box cover. Remove the screw, and remove the ICU PWB.

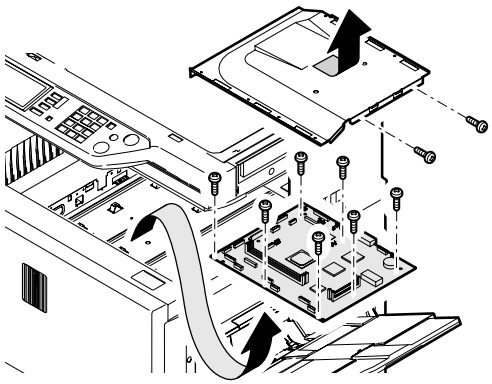

<8> Drum drive unit

1) Remove the rear cabinet.
2) Remove the DC power CFM unit.
3) Remove the driver PWB unit.
4) Remove the PCU PWB unit.
5) Remove the screw and the connector, and remove the intake duct FAN.
6) Remove the screw and the intake duct.

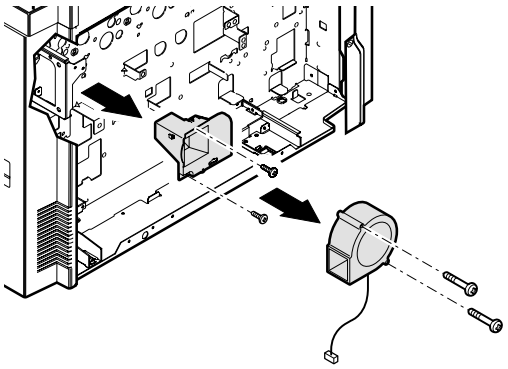

7) Remove the high voltage MC PWB.
8) Remove the connector screw and the drum drive unit.

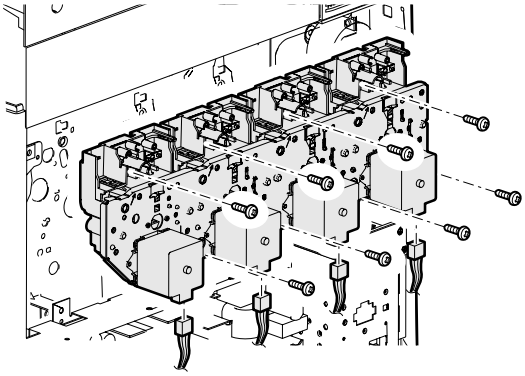

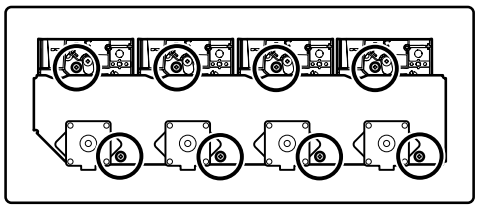

[8] SETTING AND ADJUSTMENTS

Each adjustment item in the adjustment item list is indicated with its JOB number.
Perform the adjustment procedures in the sequence of Job numbers from the smallest to the greatest.
However, there is no need to perform all the adjustment items. Perform only the necessary adjustments according to the need.
Unnecessary adjustments can be omitted. Even in this case, however, the sequence from the smallest to the greatest JOB number must be observed.
If the above precaution should be neglected, the adjustment would not complete normally or a trouble may occur.

JOB No	ADJUSTMENT ITEM LIST			SIMULATION
ADJ 1	High voltage adjustment	ADJ 1A	Main charger grid voltage adjustment	8-2
		ADJ 1B	DV bias voltage adjustment	8-1
		ADJ 1C	Transfer voltage adjustment	8-6
ADJ 2	Image density sensor adjustment	ADJ 2A	Color image density sensor adjustment (adjustment by the adjustment jig)	44-13
		ADJ 2B	Black image density sensor adjustment	44-2
		ADJ 2C	Color image density sensor & black image density sensor adjustment (Simple adjustment) *1	44-36
ADJ 3	Image focus, image skew adjustment (LED (writing) unit)			64-1/61-4
ADJ 4	Image registration adjustment	ADJ 4A	Image registration adjustment (Auto adjustment)	50-22
		ADJ 4B	Image registration adjustment (Manual adjustment)	50-20
ADJ 5	Image position/print area adjustment (Print engine section)	ADJ 5A	Main scanning direction image position adjustment (Print engine section)	50-10
		ADJ 5B	Sub scanning direction image position/print area adjustment (Print engine section)	50-5
ADJ 6	Copy image distortion adjustment	ADJ 6A	Scanner (reading) unit parallelism adjustment	
		ADJ 6B	Copy image sub scanning direction distortion adjustment	
		ADJ 6C	Copy image main scanning direction distortion adjustment	
		ADJ 6D	Scan image distortion adjustment	
ADJ 7	Copy image focus (main scanning direction copy magnification ratio) adjustment (CCD unit position adjustment)			48-1
ADJ 8	Sub scanning direction copy magnification ratio adjustment			48-1
ADJ 9	Main scanning direction copy image position adjustment (Scanner (reading) section)			50-12
ADJ 10	Copy image position/image loss/void area adjustment			50-1/50-2
ADJ 11	Copy color balance/density adjustment	ADJ 11A	CCD gamma adjustment (CCD calibration) (Normal document copy mode)	63-3 (63-5)
		ADJ 11B	Copy color balance adjustment (Auto adjustment)	46-24
		ADJ 11C	Copy color balance adjustment (Manual adjustment)	46-21
		ADJ 11D	Copy density adjustment in low-density area (Normally unnecessary to adjust.)	46-1/2
		ADJ 11E	Copy color balance density adjustment (each copy mode) (Normally unnecessary to adjust.)	46-10 to 16
		ADJ 11F	CCD gamma adjustment (CCD calibration) (Copy document copy mode)	63-9
		ADJ 11G	Image edge section gamma/density adjustment (Black text and black line reproduction adjustment) (Normally unnecessary to adjust.)	46-27
		ADJ 11H	Copy color balance adjustment (Single color Copy mode) (Normally unnecessary to adjust.)	46-25
		ADJ 11I	Auto color balance adjustment by user (Copy color balance auto adjustment enable setting and adjustment)	26-53
		ADJ 11J	Background process conditions setting in the color auto copy mode, image auto recognition conditions setting, text-on-dot recognition conditions setting	46-33
ADJ 12	Fusing pressure adjustment			
ADJ 13	Fusing paper guide position adjustment			
ADJ 14	Document size sensor adjustment	ADJ 14A	Original size sensor detection point adjustment	41-2
		ADJ 14B	Original size sensor sensitivity adjustment	41-2
ADJ 15	Manual paper feed tray paper size sensor adjustment			40-2
ADJ 16	Touch panel coordinates setting			65-1
ADJ 17	Power voltage adjustment	ADJ 17A	3.4 V power voltage adjustment	
		ADJ 17B	5.0 V power voltage adjustment	
ADJ 18	FAX/scanner mode image loss adjustment			50-27

*1: The simple adjustment does not use the adjustment jig. Its adjustment accuracy may be lower than that of the adjustment by using the adjustment jig under some machine conditions.

ADJ 1 High voltage adjustment

Since the output voltage cannot be checked directly due to the machine structure, the adjustment value of the simulation is set to the default (specified value) to perform the adjustment.

ADJ 1A Main charger grid voltage adjustment

This adjustment must be performed in the following cases:

- When the high voltage power PWB is replaced.
- When a U2 trouble occurs.
- When the PCU PWB is replaced.
- When the EEPROM of the PCU PWB is replaced.

1) Enter the SIM 8-2 mode.

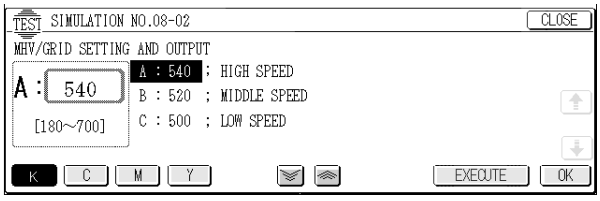

SIM 8-2

2) Select the output mode to be adjusted with the color key and scroll key.
3) Enter the adjustment value (specified value), and press the [OK] key.
   By entering the default value (specified value), the specified voltage is outputted.

Color	Item	Operation mode	Adjustment value		Main charger grid voltage			
					Monitor (High voltage PWB)		Pin No.	Actual voltage
			Adjustment range	Specified value (Default)	Monitor voltage (Specified value)	Connector		
K	A: HIGH SPEED	High speed (140mm/s) (B & W)	180 – 700	620	53.5 ± 0.2v	CNMONK	1	–620v
	B: MIDDLE SPEED	Middle speed (117mm/s) (Color) (B & W)	180 – 700	620	53.5 ± 0.2v	CNMONK	1	–620v
	C: LOW SPEED	Low speed (58.5mm/s) (Color) (B & W) (Special paper)	180 – 700	590	50.6 ± 0.2v	CNMONK	1	–590v
C	A: MIDDLE SPEED	Middle speed (117mm/s) (Color) (B & W)	180 – 700	620	53.5 ± 0.2v	CNMON	3	–620v
	B: LOW SPEED	Low speed (58.5mm/s) (Color) (B & W) (Special paper)	180 – 700	590	50.6 ± 0.2v	CNMON	3	–590v
M	A: MIDDLE SPEED	Middle speed (117mm/s) (Color) (B & W)	180 – 700	620	53.5 ± 0.2v	CNMON	7	–620v
	B: LOW SPEED	Low speed (58.5mm/s) (Color) (B & W) (Special paper)	180 – 700	590	50.6 ± 0.2v	CNMON	7	–590v
Y	A: MIDDLE SPEED	Middle speed (117mm/s) (Color) (B & W)	180 – 700	620	53.5 ± 0.2v	CNMON	11	–620v
	B: LOW SPEED	Low speed (58.5mm/s) (Color) (B & W) (Special paper)	180 – 700	590	50.6 ± 0.2v	CNMON	11	–590v

Remark: When the default value is set, the specified voltage is outputted.
There is, therefore, no need to check the output voltage unless there is a doubt for any abnormality in the output voltage.
If there is a need to check that the normal voltage is outputted or to adjust by referring to the output voltage, use the method below.

1) Remove the rear cover of the machine.
2) Remove the image process fan motor and the duct.

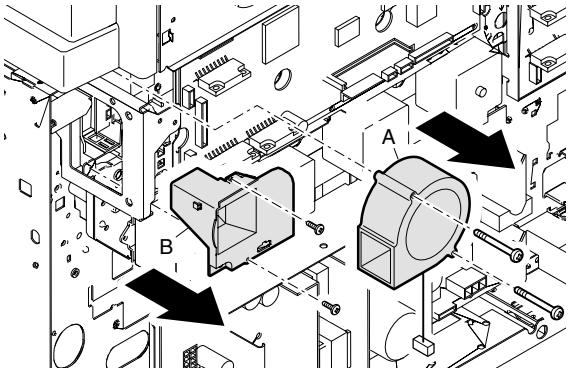

3) Connect the high voltage adjustment harnesses (DHAi-3471FCZZ/DHAi-3472FCZZ) with the connectors CNMON and CNMONK on the high voltage PWB.

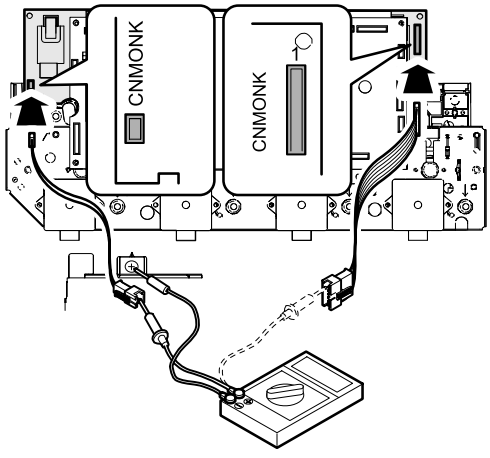

4) Enter the SIM8-2 mode.
5) Select the output mode to be adjusted with the color key and the scroll key.
6) Check that the pin numbers of the connectors CNMON and CNMONK are properly assigned to the connector pin numbers of the high voltage adjustment harness.
7) Apply a digital multi-meter to the connector pins of the high voltage adjustment harness corresponding to the output mode to be adjusted.

8) Press the [EXECUTE] key.

The main charger grid voltage is outputted for 30sec.

If this operation is performed for a long time, the OPC drum and the developing roller may be damaged. Be careful to perform this operation in a short time.

It is advisable to install an unnecessary developing unit and unnecessary OPC drums to the machine for this adjustment.

9) Check the monitor voltage with the digital multi-meter.

If the monitor voltage is not in the above specified range, change the adjustment value and adjust again. If the specified voltage is not obtained even by changing the adjustment value, the following parts may be judged as defective.

High voltage PWB

PCU PWB

Developing unit

Photoconductor unit

High voltage circuit electrode

ADJ 1B DV bias voltage adjustment

This adjustment must be performed in the following cases:

- When the high voltage power PWB is replaced.
- When a U2 trouble occurs.
- When the PCU PWB is replaced.
- When the EEPROM of the PCU PWB is replaced.

1) Enter the SIM 8-1 mode.

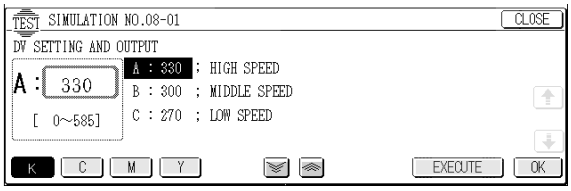

SIM 8-1

2) Select the output mode to be adjusted with the color key and the scroll key.
3) Enter the adjustment value (specified value), and press the [OK] key.

By entering the default value (specified value), the specified voltage is outputted.

Color	Item	Operation mode	Adjustment value		Developing bias voltage			
					Monitor (High voltage PWB)		Pin No.	Actual voltage
			Adjustment range	Specified value (Default)	Monitor voltage (Specified value)	Connector		
K	A: HIGH SPEED	High speed (140mm/s) (B & W)	180 – 700	315	7.43 ± 0.1V	CNMONK	3	–315v
	B: MIDDLE SPEED	Middle speed (117mm/s) (Color) (B & W)	180 – 700	315	7.43 ± 0.1V	CNMONK	3	–315v
	C: LOW SPEED	Low speed (58.5mm/s) (Color) (B & W) (Special paper)	180 – 700	285	6.45 ± 0.1V	CNMONK	3	–285v
C	A: MIDDLE SPEED	Middle speed (117mm/s) (Color) (B & W)	180 – 700	265	5.76 ± 0.1V	CNMON	1	–265v
	B: LOW SPEED	Low speed (58.5mm/s) (Color) (B & W) (Special paper)	180 – 700	235	4.75 ± 0.1V	CNMON	1	–235v
M	A: MIDDLE SPEED	Middle speed (117mm/s) (Color) (B & W)	180 – 700	265	5.76 ± 0.1V	CNMON	5	–265v
	B: LOW SPEED	Low speed (58.5mm/s) (Color) (B & W) (Special paper)	180 – 700	235	4.75 ± 0.1V	CNMON	5	–235v
Y	A: MIDDLE SPEED	Middle speed (117mm/s) (Color) (B & W)	180 – 700	240	4.75 ± 0.1V	CNMON	9	–240v
	B: LOW SPEED	Low speed (58.5mm/s) (Color) (B & W) (Special paper)	180 – 700	210	3.78 ± 0.1V	CNMON	9	–210v

Remark: When the default value is set, the specified voltage is outputted.
There is, therefore, no need to check the output voltage unless there is a doubt for any abnormality in the output voltage.
If there is a need to check that the normal voltage is outputted or to adjust by referring to the output voltage, use the method below.

1) Remove the rear cover of the machine.
2) Remove the image process fan motor and the duct.

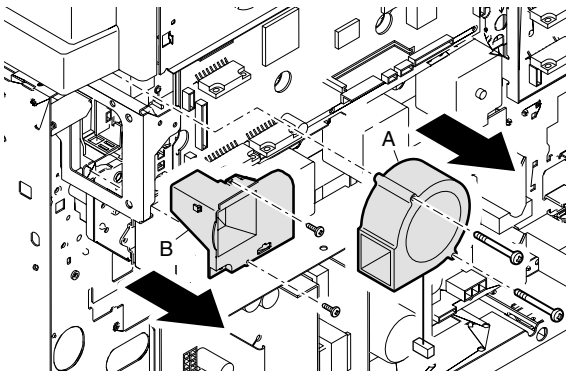

3) Connect the high voltage adjustment harnesses (DHAi-3471FCZZ/ DHAi-3472FCZZ) with the connectors CNMON and CNMONK on the high voltage PWB.

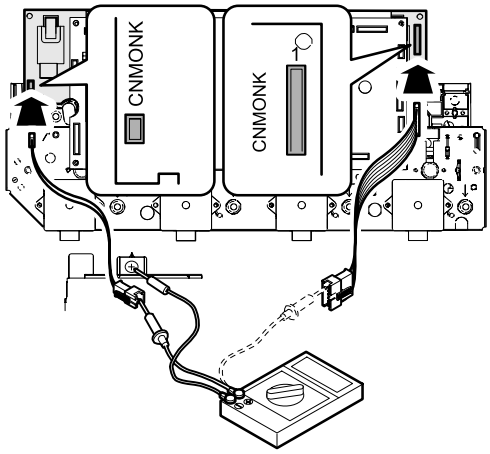

4) Enter the SIM8-2 mode.
5) Select the output mode to be adjusted with the color key and the scroll key.
6) Check that the pin numbers of the connectors CNMON and CNMONK are properly assigned to the connector pin numbers of the high voltage adjustment harness.

7) Apply a digital multi-meter to the connector pins of the high voltage adjustment harness corresponding to the output mode to be adjusted.
8) Press the [EXECUTE] key.

   The developing bias voltage is outputted for 30sec.

   If this operation is performed for a long time, the OPC drum and the developing roller may be damaged. Be careful to perform this operation in a short time.

   It is advisable to install an unnecessary developing unit and unnecessary OPC drums to the machine for this adjustment.
9) Check the monitor voltage with the digital multi-meter.

   If the monitor voltage is not in the above specified range, change the adjustment value and adjust again. If the specified voltage is not obtained even by changing the adjustment value, the following parts may be judged as defective.

   High voltage PWB

   PCU PWB

   Developing unit

   Photoconductor unit

   High voltage circuit electrode

ADJ 1C Transfer voltage adjustment

This adjustment must be performed in the following cases:

- When the high voltage power PWB is replaced.
- When a U2 trouble occurs.
- When the PCU PWB is replaced.
- When the EEPROM of the PCU PWB is replaced.

1) Enter the SIM 8-6 mode.

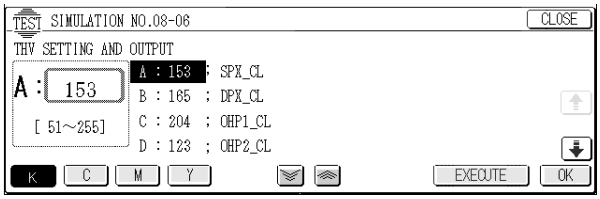

SIM 8-6

2) Select the mode to be adjusted with the color key and scroll key.
3) Enter the adjustment value (specified value), and press the [OK] key.

   By entering the default value (specified value), the specified voltage is outputted.

Item		Print mode			Standard setting value (Default)				Adjustment range	Output voltage (Kv)			
					K	C	M	Y		K	C	M	Y
A	PLAIN_SPX_CL	Color	Normal paper	117mm/s	173	159	132	132	51 - 255	2.4	2.4	2.4	2.4
B	PLAIN_DPX_CL	Color	Normal paper(Duplex mode)	117mm/s	188	173	142	142		2.7	2.7	2.7	2.7
C	OHP1_CL	Color	Transparency film 1	117mm/s	204	187	153	153		3	3	3	3
D	OHP2_CL	Color	Transparency film 2	58.5mm/s	137	150	153	163		1.7	2.2	3	3.3
E	HEAVY P1_SPX_CL	Color	Thick paper 1	58.5mm/s	158	146	122	122		2.1	2.1	2.1	2.1
F	HEAVY_P1_DPX_CL	Color	Thick paper 1(Duplex mode)	58.5mm/s	188	173	142	142		2.7	2.7	2.7	2.7
G	HEAVY_P2_CL	Color	Thick paper 2	58.5mm/s	173	159	132	132		2.2	2.2	2.2	2.2
H	ENV_CL	Color	Envelope	117mm/s	163	150	125	125		2.2	2.2	2.2	2.2
I	PLAIN_SPX_BW	B & W	Normal paper	140mm/s	168					2.3			
J	PLAIN_DPX_BW	B & W	Normal paper(Duplex mode)	140mm/s	178					2.5			
K	OHP1_BW	B & W	Transparency film 1	117mm/s	204					3			
L	OHP2_BW	B & W	Transparency film 2	58.5mm/s	137					1.7			
M	HEAVY_P1_SPX_BW	B & W	Thick paper 1	58.5mm/s	147					1.9			
N	HEAVY_P1_DPX_BW	B & W	Thick paper 1(Duplex mode)	58.5mm/s	178					2.5			
O	HEAVY_P2_BW	B & W	Thick paper 2	58.5mm/s	163					2.2			
P	ENV_BW	B & W	Envelope	140mm/s	168					2.3			

Color	Actual output variable range	Voltage change/Adjustment value (1) (Varying amount when the adjustment value is changed by 1)
K	0 to 4000V	About 19.6V
C	0 to 4500V	About 22.1V
M	0 to 6000V	About 29.4V
Y	0 to 6000V	About 29.4V

Press the [EXECUTE] key to output the transfer voltage.

ADJ 2 Image density sensor adjustment

The image density sensor sections are of uneven quality in parts and assembly. This causes variations in the absolute detection level between machines. This adjustment (calibration) is performed to correct the variations.

This adjustment is required in the following cases:

- When the image density sensor is replaced.
- When the transfer unit is replaced.
- When maintenance is performed.
- When U2 trouble occurs.
- When the PCU PWB is replaced.
- When the EEPROM on the PCU PWB is repalced.

The targets of the adjustment are the color image density sensor and the black image density sensor. There are following adjustment methods:

- Color image density sensor adjustment (adjustment by the adjustment jig) SIM44-13
- Black image sensity sensor adjustment SIM44-2
- Image density sensor adjustment (The color image density sensor and the black image density sensor are adjusted at the same time.) (Simple adjustment) SIM44-36

Normally the following adjustments are executed:

- ADJ 2A Color image density sensor adjustment (adjustment by the adjustment jig) (SIM44-13)
- ADJ 2B Black image density sensor adjustment (SIM44-2)

Note:

There are two methods to adjust the color image density sensor; one method uses the adjustment jig, and the other method does not use it.

If there is no adjustment jig available, the simple adjustment (SIM44-36) can be made, which may, however, result in insufficient adjustment accuracy depending on the machine condition.

If toner, the OPC drum, and the transfer belt are not new ones or almost new ones, the simple adjustment is not recommended.

Even though the machine conditions are well, the adjustment by use of the adjustmment jig gives a higher adjustment accuracy than the adjustment without the adjustment jig (simple adjustment).

Also note that SIM44-36 must not executed unnecessarily after execution of the color image density sensor adjustment (adjustment by the adjustment jig) with SIM44-13.

If SIM 44-36 is executed, the contents of the color image density sensor adjustment (adjustment by the adjustment jig) with SIM44-13 are erased, and the adjustment result of SIM44-36 is saved.

When the color image density sensor is adjusted with SIM44-13 and the black image density sensor is adjsuted with SIM 44-2, the adjustment with SIM44-36 is not required.

To adjust the black image density sensor, the adjustment jig is not required.

Before executing this adjustment, check the following items:

- Check that the color imagte density sensor is clean.
- Check that the image density sensor calibration plate is clean.
- Check that the transfer belt is free from scratches.

ADJ 2A Color image density sensor adjustment (adjustment by the adjustment jig)

1) Open the front cover of the machine.
2) Insert the color image density sensor adjustment jig (CPLTM6305FC01) into the long hole in the transfer unit frame, and close the left cabinet.

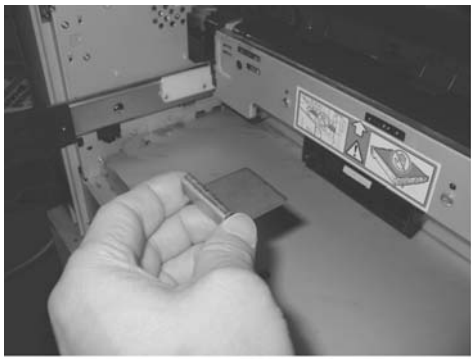

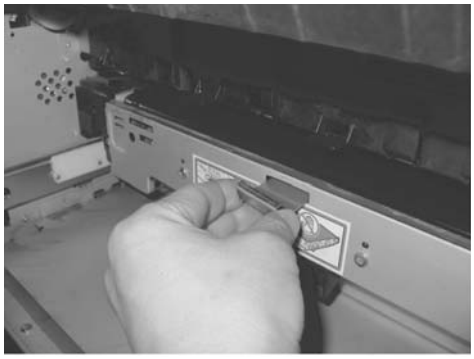

3) With the front cover of the machine open (with the cover open/close switch OFF), turn on the power.
4) The Machine enters Sim 44-13 mode.

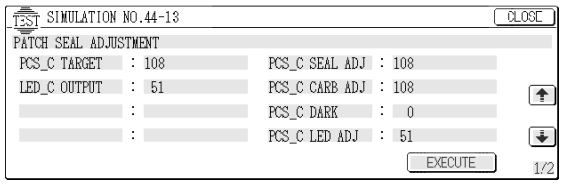

SIM 44-13

5) Close the front cover of the machine.
6) Press the [EXECUTE] key.

   The adjustment is performed automatically. When the adjustment is completed, the adjustment result is displayed and the the [EXECUTE] key display returns to the original state.

Display		Content	Min Value	Max Value	Default value
A	PCS_C CARB ADJ	Color image density sensor LED current adjustment target value	1	255	108
B	PCS_C DARK	Color image density sensor dark voltage level	0	255	0
C	PCS_C LED ADJ	Color image density sensor current adjustment value	1	255	51

7) Remove the color image density sensor adjustment jig.

If the adjustment is not completed normally, "ERROR" is displayed.

In that case, check the following sections for no abnormality. If there is any abnormality, repair the part and perform the adjustment again. In case of an error, the adjustment result is not revised.

- Image density sensor
- PCU PWB
- Transfer belt

Note:

The color image density sensor adjustment jig is available in the following two forms:

- The jig metal plate with the calibration sheet attached to it (CPLTM6305FC01)
- Calibration sheet (for replacement) (TLABZ4843FCZZ)

TLABZ4843FCZZ is the calibration sheet for replacement. When the calibration sheet attached to CPLTM6305FC01 is dritied or scratched too much to be used, replace only the calibration sheet with a new one.

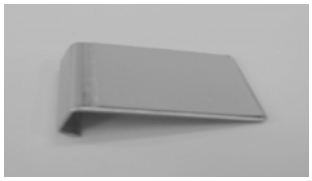

ADJ 2B Black image density sensor adjustment

1) Enter the SIM44-2 mode.

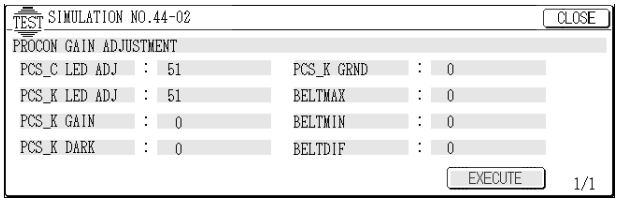

2) Press the [EXECUTE] key.

The adjustment is performed automatically. When the adjustment is completed, the adjustment result is displayed and the the [EXECUTE] key display returns to the original state.

Display		Content	Min Value	Max Value	Default value
A	PCS_C LED ADJ	Color image density sensor current adjustment value	1	255	51
B	PCS K LED ADJ	Black image density sensor LED Current adjustment value	1	255	51
C	PCS_K GAIN	Black image density sensor output gain (AMP) adjustment value	0	15	0
D	PCS_K DARK	Black image density sensor dark voltage level	0	255	0
E	PCS_K GRND	Black image density sensor transfer belt surface detection level	0	255	0
F	BELTMAX	Transfer belt surface max. detection level (Black image sensor)	0	255	0
G	BELTMIN	Transfer belt surface min. detection level (Black image sensor)	0	255	0
H	BELTDIF	Difference between the max. value and the min. value of the transfer belt surface detection level (BELTMAX-BELTMIN)	0	255	0

If the adjustment is not completed normally, "ERROR" is displayed.

In that case, check the following sections for no abnormality. If there is any abnormality, repair the part and perform the adjustment again.

In case of an error, the adjustment result is not revised.

- Image density sensor
- PCU PWB
- Transfer belt

ADJ 2C Color image density sensor & black image density sensor adjustment (Simple adjustment)

When the color image density sensor is adjusted with SIM44-13 and the black image density sensor is adjusted with SIM44-2, the adjustment with SIM44-36 is not required.

In addition, the color image density adjustment jig is not used.

1) Enter the SIM44-36 mode.

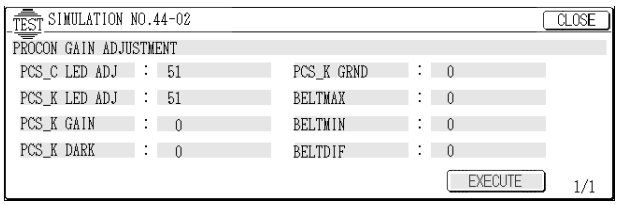

2) Press the [EXECUTE] key.

The adjustment is performed automatically. When the adjustment is completed, the adjustment result is displayed and the the [EXECUTE] key display returns to the original state.

Display	Content	Min Value	Max Value	Default value
PCS_C CARB ADJ	Color image density sensor LED current adjustment target value	1	255	108
PCS_C DARK	Color image density sensor dark voltage level	0	255	0
PCS_C LED ADJ	Color image density sensor current adjustment value	1	255	51
PCS K LED ADJ	Black image density sensor LED current adjustment value	1	255	51
PCS_K GAIN	Black image density sensor output gain (AMP) adjustment value	0	15	0
PCS_K DARK	Black image density sensor dark voltage level	0	255	0
PCS_K GRND	Black image density sensor transfer belt surface detection level	0	255	0
BELTMAX	Transfer belt surface max. detection level (Black image sensor)	0	255	0
BELTMIN	Transfer belt surface min. detection level (Black image sensor)	0	255	0
BELTDIF	Difference between the max. value and the min. value of the transfer belt surface detection level (BELTMAX-BELTMIN)	0	255	0

If the adjustment is not completed normally, "ERROR" is displayed.
In case of an error, the adjustment result is not revised.

In that case, check the following sections for no abnormality. If there is any abnormality, repair the part and adjust again.

- Image density sensor
- PCU PWB
- Transfer belt

ADJ 3 Image focus, image skew adjustment (LED (writing) unit)

(1) LED print engine image focus adjustment (LED (writing) unit)

This adjustment must be performed in the following cases:

- When the scanner (writing) unit is replaced.
- When the scanner (writing) unit is removed from the machine.
- When the print image is shifted.
  (Especially conspicuous for text and line drawings)
  (The scanner (reading) unit is normal, but the print image focus of the print engine is not normal.)
- When there is uneven density in the main scanning direction.
- When the color balance adjustment does not result in proper color matching.
- When in installation or when the installing site is changed. (Necessary depending on the case)

1) Execute the process correction forcibly. (SIM44-6)
This simulation is used to correct the print density of the adjustment pattern.

2) Enter the SIM 61-4 mode.

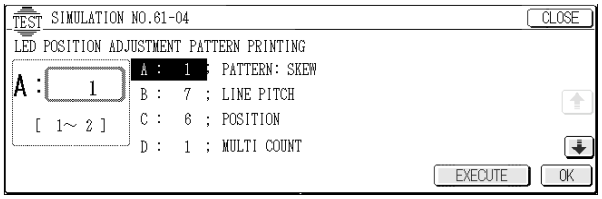

SIM 61-4

3) Set the items A, B and C according to the table below.

	Parameter	Set value
A	PRINT PATTERN	2
B	DENSITY	7
C	POSITION	6

4) Select the A4 (11 x 8 1/2) paper feed tray.
5) Press the [EXECUTE] key.
The focus adjustment pattern is printed.
6) Check the printed focus adjustment pattern for each color.
If focus is proper, the half-tone belts are printed properly. When four or five half-tone belts of each color are printed and there is no density difference in the main scanning direction (back and forth), the focus is proper both on the front and the back sides.

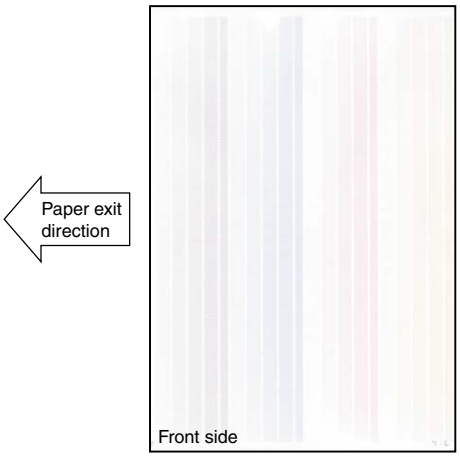

Check that the half-tone belts of each color are printed in good balance.

7) If the above condition is not satisfied, turn the focus adjustment screws on the front/rear frame sides to adjust focus.
Focus on the front side can be separately adjusted from focus on the rear side.

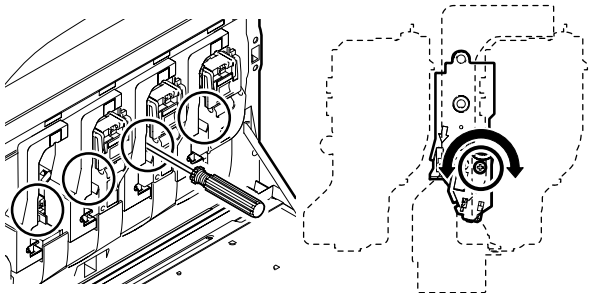

Front frame side

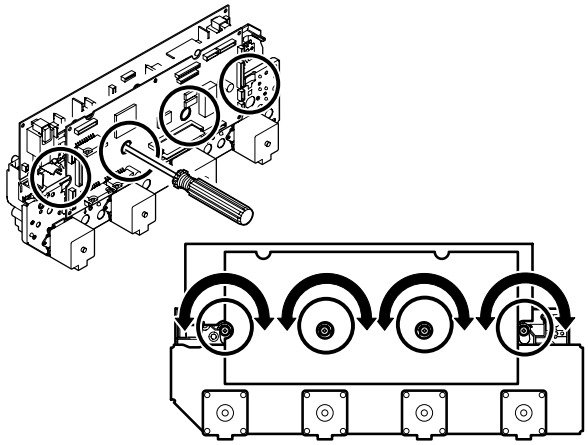

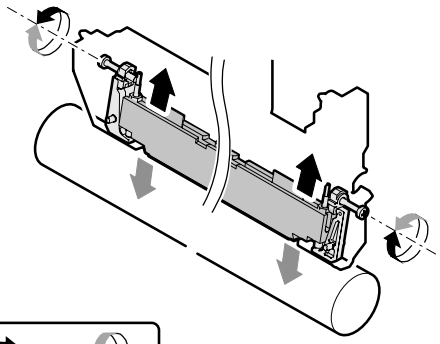

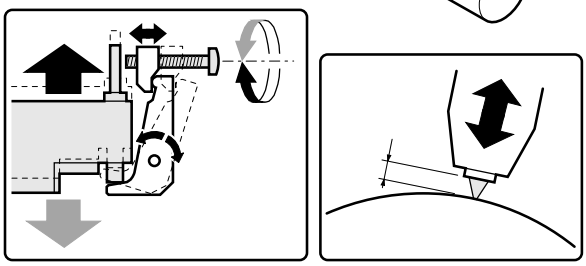

Rear frame side

Execute procedures 4 to 6 for each color.

(2) Print engine image skew adjustment (LED (writing) unit)

This adjustment must be performed in the following cases:

- When the scanner (writing) unit is replaced.
- When the scanner (writing) unit is removed from the machine.
- When the print image includes skew.
(When the scanner (reading) unit is normal and the print image of the print engine includes skew.)
- When a color image registration error occurs.
(There is an image registration difference in the main scanning direction.)
- When there is uneven density in the main scanning direction.
- When the color balance adjustment does not result in proper color matching.
- When in installation or when the installing site is changed. (Necessary depending on the case)

1) Enter the SIM 64-1 mode.

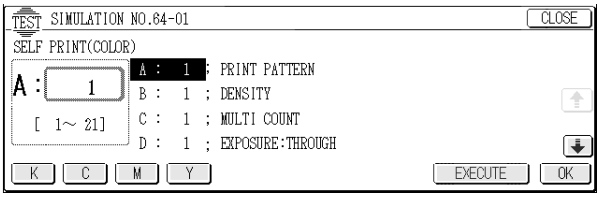

SIM 64-1

2) Set the items A and B according to the table below.

	Parameter	Set value
A	PRINT PATTERN	1
B	DENSITY	1

3) Select the A3 (11 x 17) size paper feed tray.

4) Select Black (K) and press the [EXECUTE] key.
The grid patter (one page) is printed.

5) Check the printed grid pattern. (Check for image skew (distortion).)
If the right-angle level of the traverse print line is 0.5mm or less for the longitudinal print line of paper, there is no need to adjust.

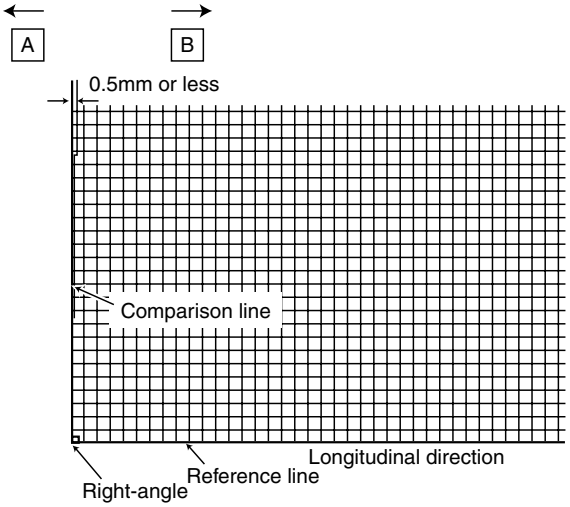

6) If the above conditions are not satisfied, remove the developing unit and turn the print engine image skew adjustment screw to adjust.
At that time, use SIM 7-1 to set DV CHECK DISABLE to Enable and to disable the developing unit installation detection.
If skew is made in the arrow direction A, turn the adjustment screw clockwise. If skew is made in the arrow direction B, turn the adjustment screw counterclockwise.

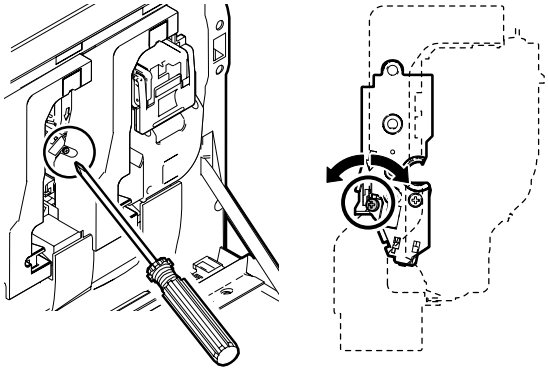

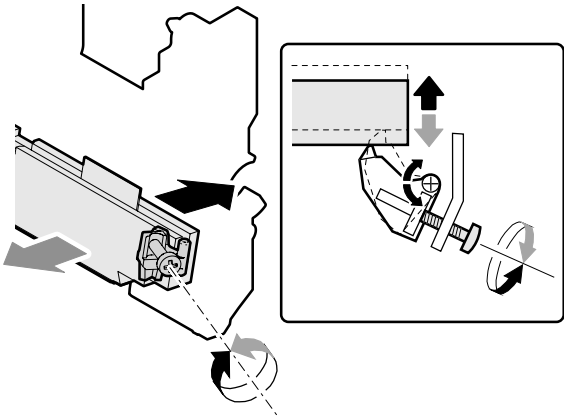

7) Enter the SIM 61-4 mode.

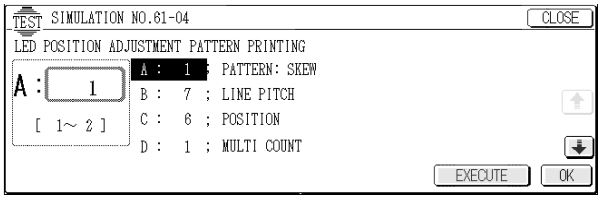

SIM 61-4

8) Select the A4 (11 x 8.5) size paper feed tray.

9) Press the [EXECUTE] key.
The print engine image skew adjustment pattern is printed. (One page)

10) Check the printed image skew (distortion) pattern.
Compare the same color print pattern on the front frame side with that on the rear frame side, and check that the difference between the two highest-density areas is within 2 steps. (Compare the same color print pattern on the front frame side with that on the rear frame side. There is no need for the positions of the highest-density areas of the print color patterns of all the colors to be aligned on a line. Compare only the same color pattern positions.)

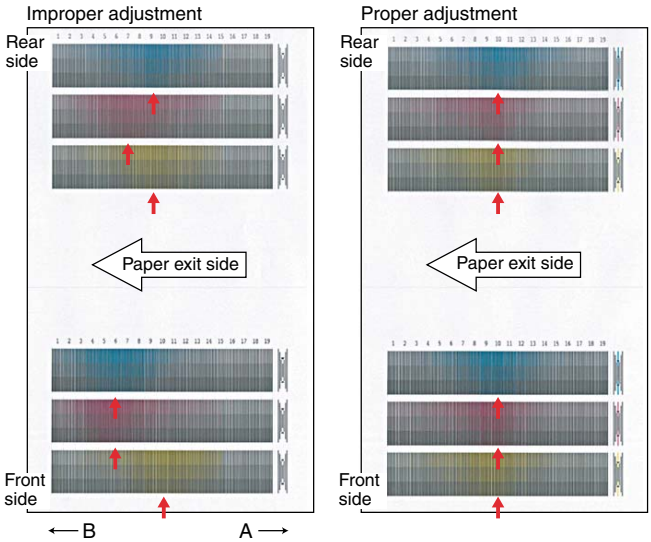

If the above conditions are not satisfied, remove the developing unit on the left and turn the print engine image skew adjustment screw on the front frame side.
To adjust the print engine image skew of Cyan, for example, remove the Magenta developing unit. (To adjust the print engine image skew of Yellow, however, this is not required.)
At that time, use SIM 7-1 to set DV CHECK DISABLE to Enable and to disable the developing unit installation detection.

When the image pattern on the front frame side is skewed to the right (arrow direction A) with the rear frame side as the reference, turn the adjustment screw clockwise. When the image pattern is skewed to the left (arrow direction B), turn the adjustment screw counterclockwise.

When the adjustment screw is turned 1/4 rotation, the image position is shifted by one dot.

Remark: The print engine image focus adjustment is performed by changing the distance between the LED array unit and the OPC drum.

The print engine image skew adjustment is performed by changing the parallelism of the LED array unit for the OPC drum.

If either of the two adjustments is performed, it may affect the other adjustment due to the machine structure.

After completion of the above procedures, check that both of the above two adjustments are satisfied.

ADJ 4 Image registration adjustment

There are two methods of the image registration adjustment: the manual adjustment and the automatic adjustment. Either of them uses the simulation.

This adjustment is required in the following cases:

- When the scanner (writing) unit is replaced.
- When the scanner (writing) unit is removed from the machine.
- When color image mis-resist is generated in the main scanning direction.
- When color image mis-resist is generated in the sub scanning direction.
- When installation or the installing place is changed.
- When maintenance is performed. (When the OPC drum, the photoconductor cartridge, the transfer unit, or the transfer belt is replaced.)
- When U2 trouble occurs.
- When ICU PWB is replaced.
- When EEPROM on ICU PWB is replaced.

Remark: Though SIM 50-22 is not performed under the following conditions, the image registration adjustment is performed automatically.

* When the toner cartridge is replaced.
* At every 8,000 copies (total of print quantity and copy quantity) (When 8,000 copies is reached during a job, the machine stops after completion of the job.)

If the set item AR of SIM 44-1 is set to OFF (Disable), the above operation is not performed.

After setting the image registration to the best by SIM 50-20, when the image registration adjustment is automatically performed, the best-adjusted condition may be varied. To avoid this, set the item AR of SIM 44-1 to OFF (Disable).

Note:

Before executing this adjustment, check that the following adjustments have been properly completed.

* Print engine image focus adjustment (Scanner (writing) unit)
* Print engine image skew adjustment (Scanner (writing) unit)
* Image registration sensor adjustment

ADJ 4A Image registration adjustment (Auto adjustment)

This adjustment is used to perform the image registration adjustment in the main scanning direction and in the sub scanning direction at the same time with the simulation.

1) Enter the SIM 50-22 mode.

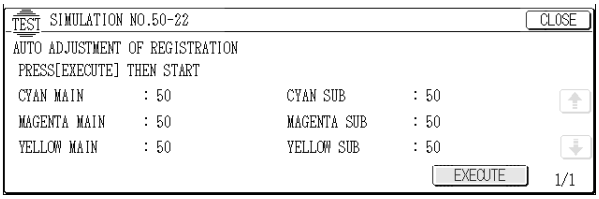

SIM 50-22

2) Press the [EXECUTE] key.

The [EXECUTE] key is highlighted, and the image registration automatic adjustment is started. After completion of the adjustment, the [EXECUTE] key returns to the normal display.

The adjustment process status is indicated with (*) mark. It takes several minutes to complete the adjustment.

3) Enter the SIM 50-20 mode.

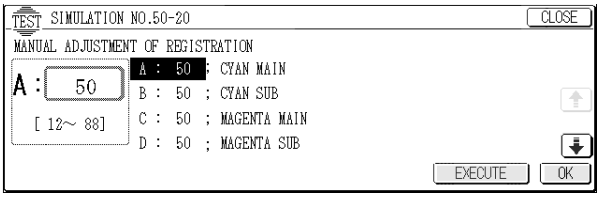

SIM 50-20

4) Select the A4 (11 x 8 1/2) size paper feed tray.
5) Press the [EXECUTE] key.

The image registration adjustment pattern is printed.

- Image registration adjustment pattern

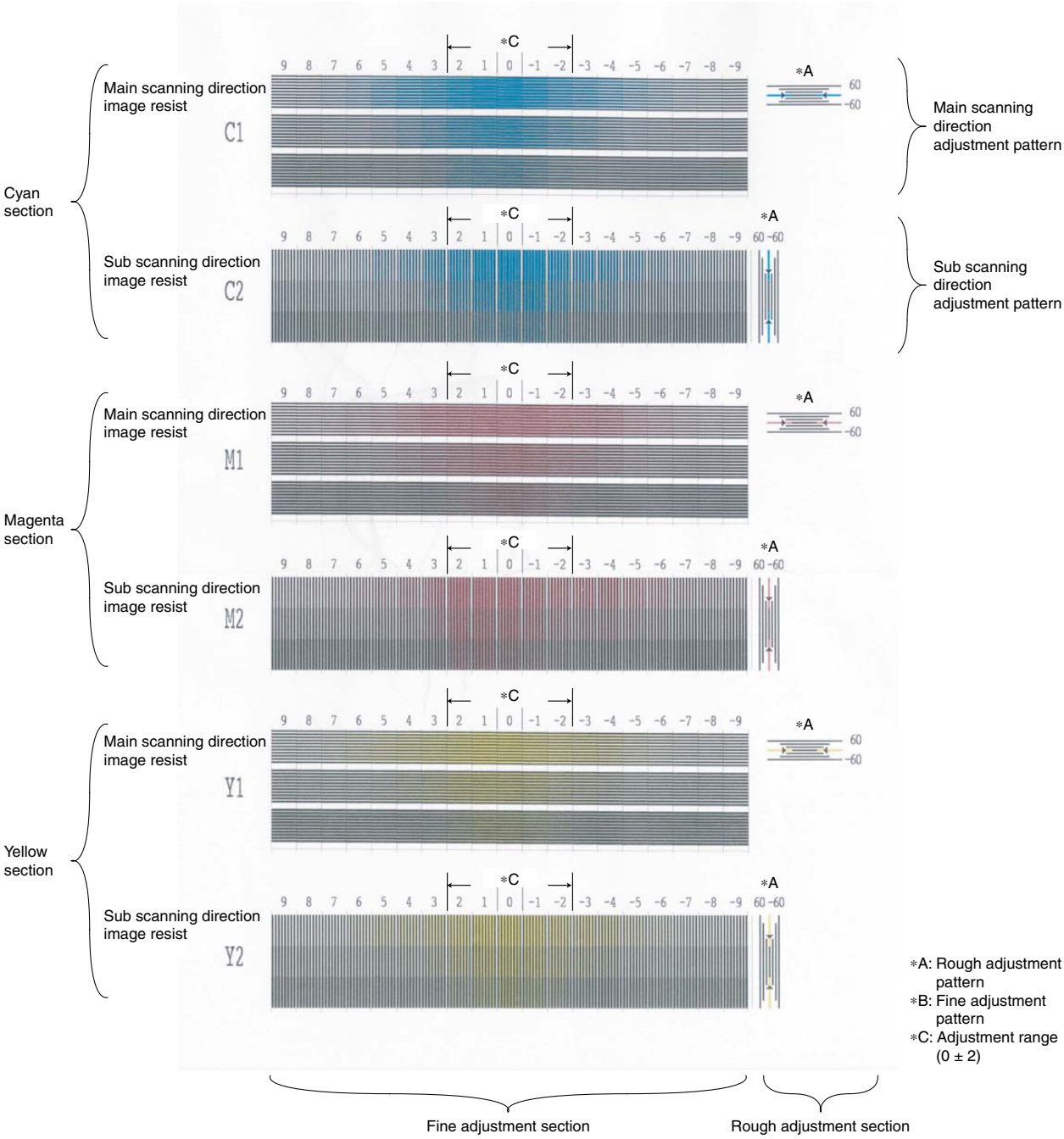

C1 = CYAN MAIN
C2 = CYAN SUB
M1 = MAGENTA MAIN
M2 = MAGENTA SUB
Y1 = YELLOW MAIN
Y2 = YELLOW SUB

6) Check the rough adjustment print pattern position and the fine adjustment print pattern position of each color on the front and the rear frame sides.

Check visually and use the highest-density area of each color as the center, and regard it as the reading value of shift.

Rough adjustment print pattern check:	Check that the rough adjustment print pattern is at the center for the rough adjustment reference pattern.
Fine adjustment print pattern check:	Check that the fine adjustment print pattern is at the center for the fine adjustment reference pattern.

(If the fine adjustment print pattern is in the range of 0 ± 2 for the scale of the fine adjustment reference pattern, there is no need to adjust.)

If the adjustment is not completed with a satisfactory result, try the manual adjustment.

ADJ 4B Image registration adjustment (Manual adjustment)

1) Enter the SIM 50-20 mode.

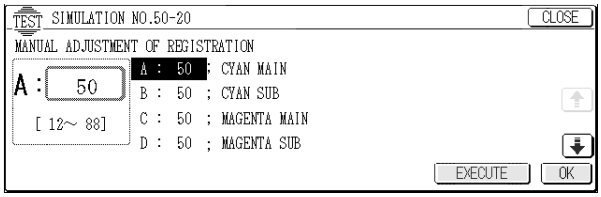

SIM 50-20

2) Select the A4 (11 x 8 1/2) paper feed tray.
3) Press the [EXECUTE] key.
   The image registration adjustment pattern is printed.
4) Check the rough adjustment print pattern position and the fine adjustment print pattern position of each color on the front and the rear frame sides.
   Check visually and use the highest-density area of each color as the center, and regard it as the reading value of shift.

   Rough adjustment print pattern check: Check that the rough adjustment print pattern is at the center for the rough adjustment reference pattern.

   Fine adjustment print pattern check: Check that the fine adjustment print pattern is at the center for the fine adjustment reference pattern.

   (If the fine adjustment print pattern is in the range of 0 ± 2 for the scale of the fine adjustment reference pattern, there is no need to adjust.)

   If the above condition is not satisfied, change the adjustment value and tray again.
5) Select the color mode adjustment item to be adjusted with the scroll key. Change the adjustment value and to adjust.

Display		Adjustment item		Set range	Default value
A	CYAN MAIN	Main scanning direction image registration adjustment value	Cyan	12 to 88	50
B	CYAN SUB	Sub scanning direction image registration adjustment value	Cyan		
C	MAGENTA MAIN	Main scanning direction image registration adjustment value	Magenta		
D	MAGENTA SUB	Sub scanning direction image registration adjustment value	Magenta		
E	YELLOW MAIN	Main scanning direction image registration adjustment value	Yellow		
F	YELLOW SUB	Sub scanning direction image registration adjustment value	Yellow		

   When the adjustment value is changed by 1, the image position is shifted by one pixel.

Main scanning direction image position adjustment (Print engine section)

(1) How to read the fine adjustment pattern

The highest-density area of the color is regarded as the center and as the reading value of the shift amount.
(The reading value in the figure below is 4.)

(2) How to read the rough adjustment pattern

Judge the polarity by checking that the color line is shifted to the positive or the negative side.

The scales are made with the black line at the center as 0, the first mark as 20, the second mark as 40, and the third mark as 60.

The interval between rough adjustment marks is 20.
(For an example shown in the figure below, it is between 20 and 40 on the positive side. Therefore, the reading value is 20.)
(Example)

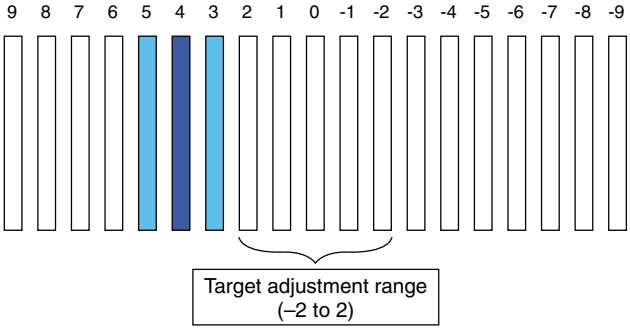

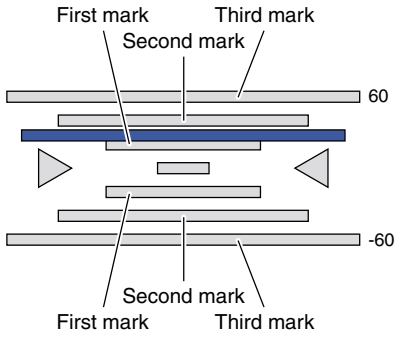

(3) How to calculate the adjustment value

New adjustment value = Current adjustment value + Rough adjustment pattern reading value + Fine adjustment pattern reading value

A: Current adjustment value

B: New adjustment value

X: Fine adjustment pattern reading value

Y: Rough adjustment pattern reading value

The polarity of the calculation differs depending on the polarity of the adjustment pattern reading values. There are following four cases:

1) When Y ≥ 0, and X ≥ 0:
   B = A + X + Y
2) When Y ≥ 0, and X < 0:
   B = A + (X + 20) + Y
3) When Y < 0, and X ≥ 0:
   B = A + (X – 20) + Y
4) When Y < 0, and X < 0:
   B = A + X + Y

Example

A: Providing that Current adjustment value = 48:

1) When Y ≥ 0, and X ≥ 0:

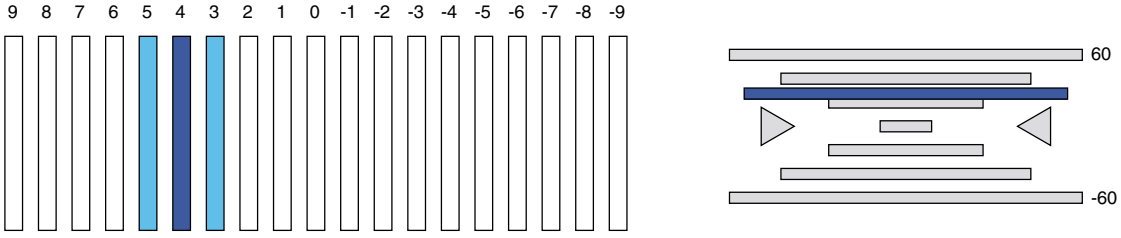

B = A + X + Y = 48 + (4) + (20) = 72

2) When Y ≥ 0, and X < 0:

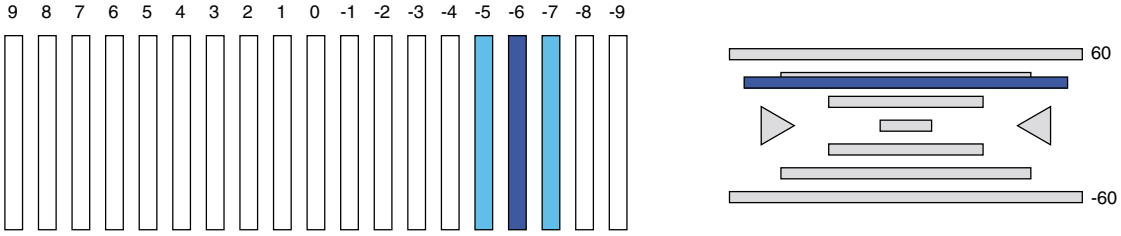

B = A + (X + 20) + Y = 48 + (–6 + 20) + (20) = 82

3) When Y < 0, and X ≥ 0:

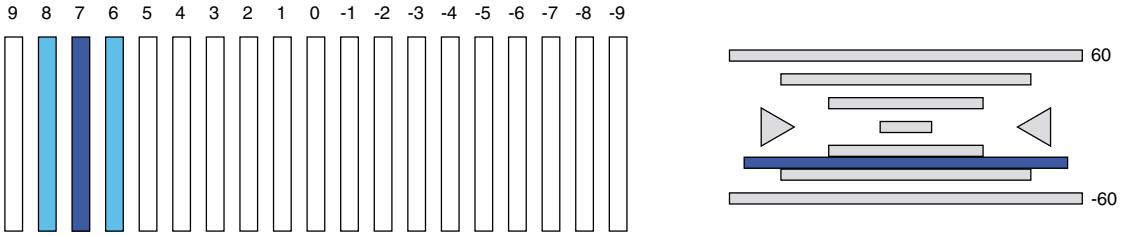

B = A + (X – 20) + Y = 48 + (7 – 20) + (–20) = 15

4) When Y < 0, and X < 0:

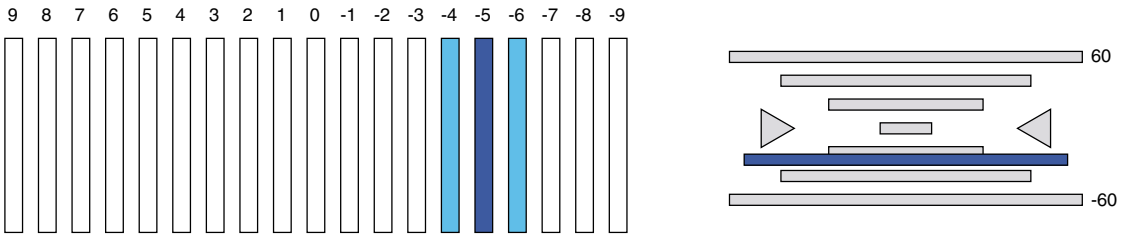

B = A + X + Y = 48 + (–5) + (–20) = 23

Sub scanning direction image position/print area adjustment (Print engine section)

(1) How to read the fine adjustment pattern

The highest-density area of the color is regarded as the center and as the reading value of the shift amount.
(The reading value in the figure below is 4.)

(2) How to read the rough adjustment pattern

Judge the polarity by checking that the color line is shifted to the positive or the negative side.

The scales are made with the black line at the center as 0, the first mark as 20, the second mark as 40, and the third mark as 60.

The interval between rough adjustment marks is 20.
(For an example shown in the figure below, it is between 20 and 40 on the positive side. Therefore, the reading value is 20.)

(Example)

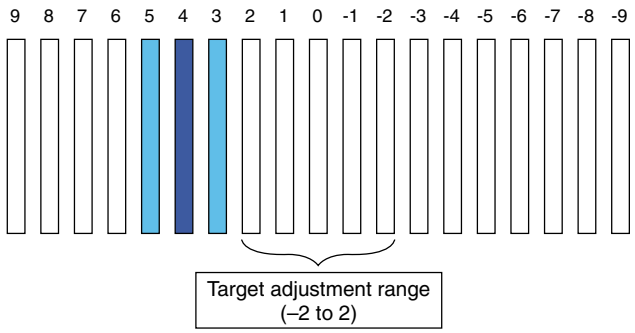

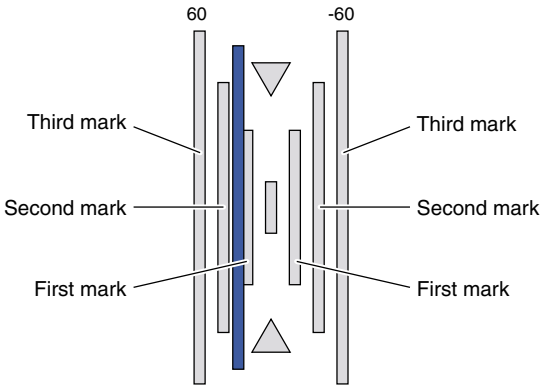

(3) How to calculate the adjustment value

New adjustment value = Current adjustment value + Rough adjustment pattern reading value + Fine adjustment pattern reading value

A: Current adjustment value

B: New adjustment value

X: Fine adjustment pattern reading value

Y: Rough adjustment pattern reading value

The polarity of the calculation differs depending on the polarity of the adjustment pattern reading values. There are following four cases:

1) When $Y \geq 0$, and $X \geq 0$:
   $B = A + X + Y$
2) When $Y \geq 0$, and $X < 0$:
   $B = A + (X + 20) + Y$
3) When $Y < 0$, and $X \geq 0$:
   $B = A + (X - 20) + Y$
4) When $Y < 0$, and $X < 0$:
   $B = A + X + Y$

Example

A: Providing that Current adjustment value = 48:

1) When $Y \geq 0$, and $X \geq 0$:

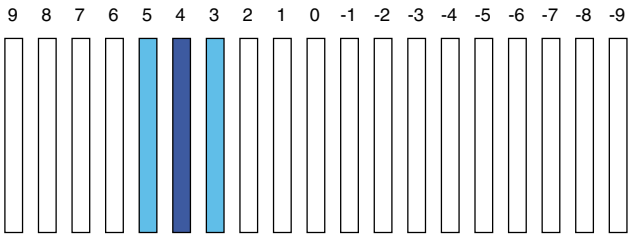

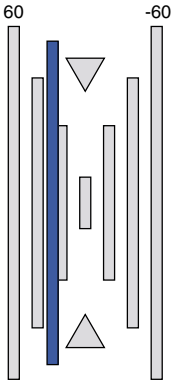

$B = A + X + Y = 48 + (4) + (20) = 72$

2) When Y ≥ 0, and X < 0:

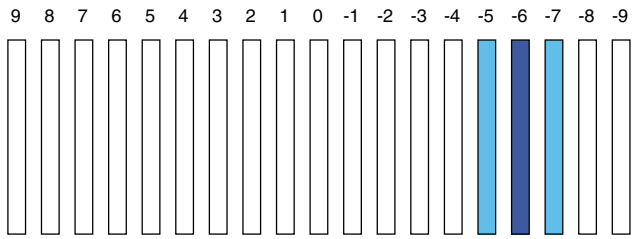

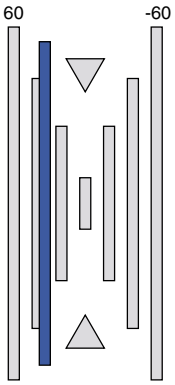

B = A + (X + 20) + Y = 48 + (−6 + 20) + (20) = 82

3) When Y < 0, and X ≥ 0:

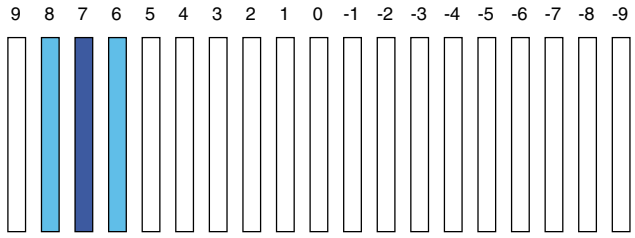

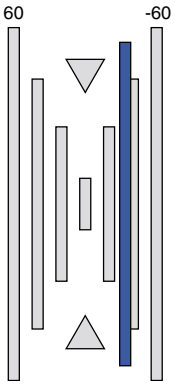

B = A + (X − 20) + Y = 48 + (7 − 20) + (−20) = 15

4) When Y < 0, and X < 0:

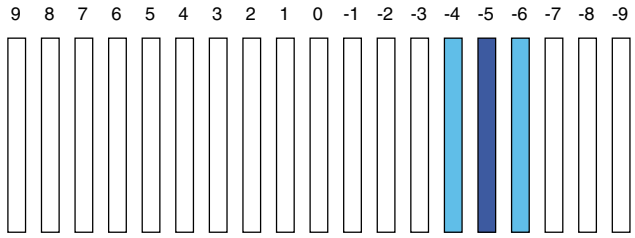

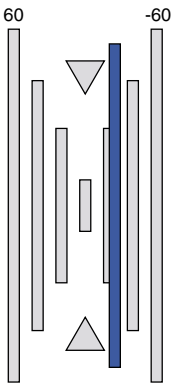

B = A + X + Y = 48 + (−5) + (−20) = 23

ADJ 5 Image position/print area adjustment (Print engine section)

ADJ 5A Main scanning direction image position adjustment (Print engine section)

This adjustment must be performed in the following cases:

- When the paper tray is replaced.
- When the paper tray section is disassembled.
- When the manual paper feed tray is replaced.
- When the manual paper feed tray is disassembled.
- When the duplex section is disassembled.
- When the duplex section is installed or replaced.
- When the large capacity paper feed tray is installed or replaced.
- When the large capacity paper feed tray is disassembled.
- When a U2 trouble occurs.
- When the ICU main PWB is replaced.
- When the EEPROM of the ICU main PWB is replaced.

1) Enter the SIM 50-10 mode.
2) Select the paper feed mode to be adjusted with the scroll key.
3) Press the [EXECUTE] key.
   The adjustment pattern is printed.
4) Check the adjustment pattern image position.
   Measure the sizes of the void area on the front and the back edges of the adjustment pattern, and check that the following conditions are satisfied.
   If A – B = 0 ± 4.0mm, there is no need to adjust.
   If the above condition is not satisfied, perform the following procedure.

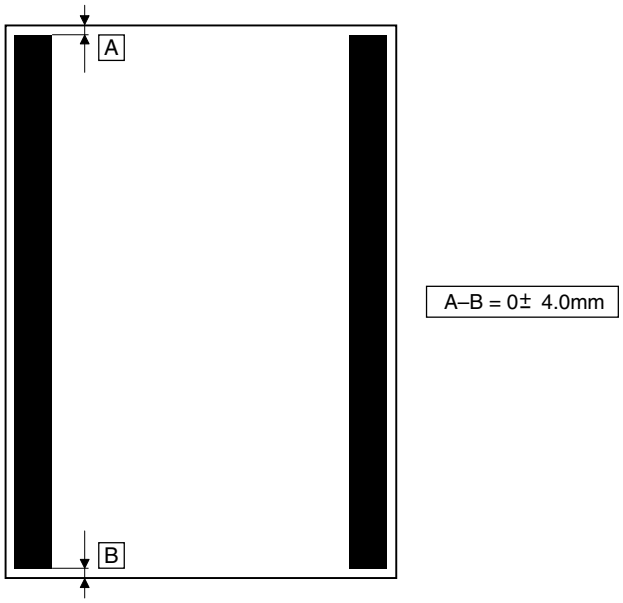

5) Change the adjustment value.
   (Enter the adjustment value and press the [OK] key.)
   When the adjustment value is increased, the image is shifted backward.
   When the adjustment value is decreased, the image is shifted forward.
   A change in the set value by 1 corresponds to a change in the shift by about 0.1mm.
   Repeat procedures 3) – 5) until the condition of procedure 4) is satisfied.
   If the above procedure does not satisfy the condition of 4), perform the following procedure.
6) Loosen the paper feed tray cover fixing screw, and shift the installing position in the arrow direction.
   Perform procedures from 2) again.

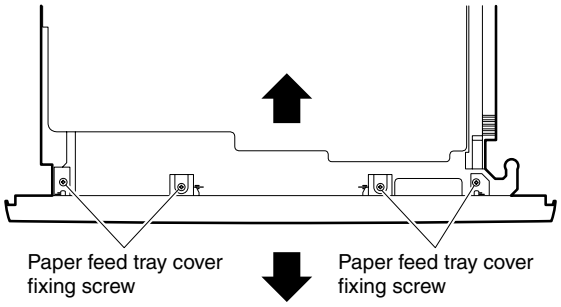

   Perform the above procedures for all paper feed units.

ADJ 5B Sub scanning direction image position/ print area adjustment (Print engine section)

This adjustment must be performed in the following cases:

- When a U2 trouble occurs.
- When the ICU PWB is replaced.
- When the EEPROM of the ICU PWB is replaced.

1) Enter the SIM 50-5 mode.
2) Select the paper feed mode with the scroll key.
3) Press the [EXECUTE] key.
   The adjustment pattern is printed.
4) Check the adjustment pattern image position.

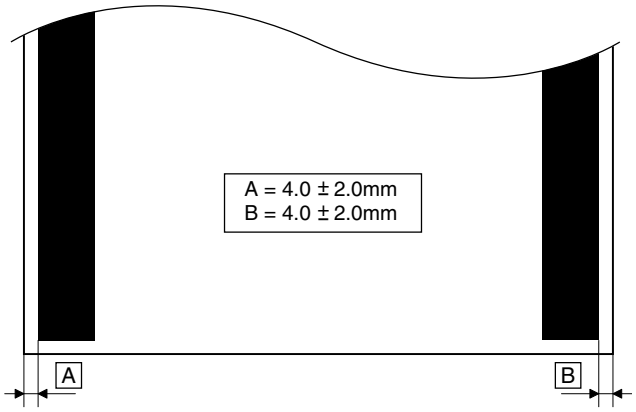

   Measure the sizes of the void area on the left and the right edges of the adjustment pattern, and check that the following conditions are satisfied.
   If A = 4.0 ± 2.0mm and B = 4.0 ± 2.0mm, the adjustment is not required.
   If the above condition is not satisfied, perform the following procedure.
5) Change the adjustment values of item A (DEN-C) and B (DEN-B), and press the [EXECUTE] key.
   When the adjustment value of item A (DEN-C) is decreased by 1, the print start position in the sub scanning direction is shifted to the paper lead edge by 0.125mm.
   When the adjustment value of item B (DEN-B) is decreased by 1, the print start position in the sub scanning direction is shifted to the paper rear edge by 0.125mm.
   Repeat procedures 3) – 5) until the condition of procedure 4) is satisfied.

ADJ 6 Copy image distortion adjustment

This adjustment must be performed in the following cases:

- When the scanner (reading) section is disassembled.
- When a copy image distortion occurs.

ADJ 6A Scanner (reading) unit parallelism adjustment

1) Loosen the screw that is fixing the scanner unit A and the drive wire, and remove the scanner unit A from the drive wire.

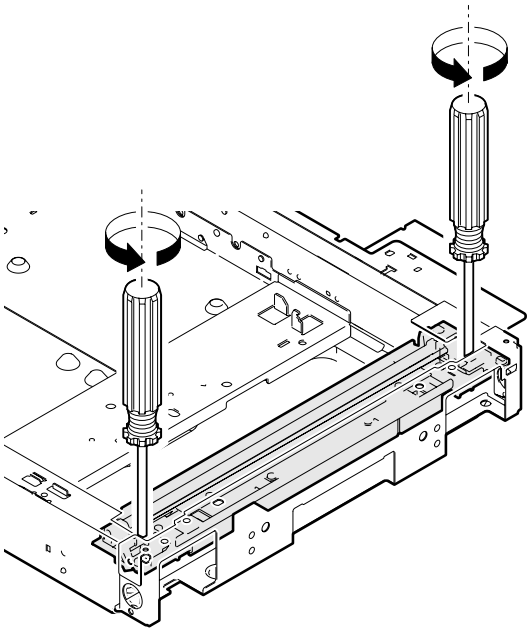

2) Manually turn the scanner drive pulley to bring the scanner unit B into contact with the stopper.

   At that time, if the scanner unit B makes contact with the two stoppers on the front and the rear frame simultaneously, the parallelism of the scanner unit B is proper.

   If not, perform the following procedures.

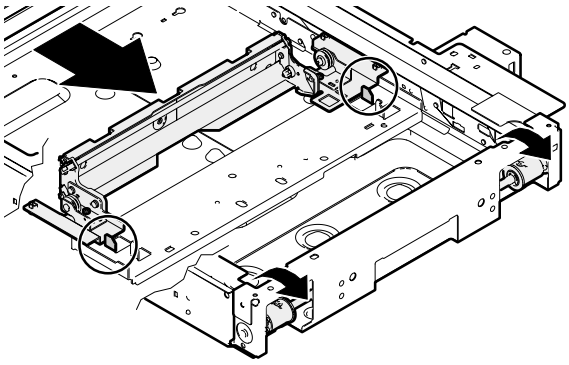

3) Loosen the pulley angle fixing screw on the front frame side of the scanner unit B.

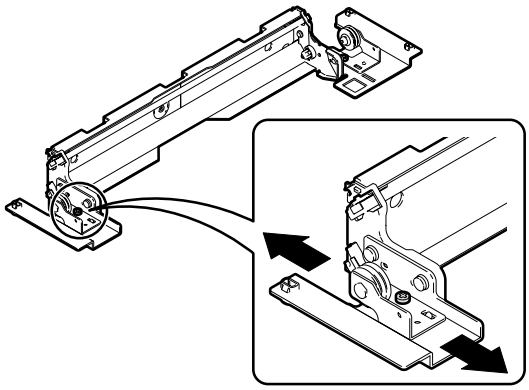

4) Adjust the pulley angle position on the scanner unit B front frame side so that both stoppers on the front frame and the rear frame are in contact with the scanner unit B at the same time.

5) Fix the pulley angle on the scanner unit B front frame side.

   If the above procedure does not result in a satisfactory result, perform the following procedure.

   Loosen the fixing screw of the scanner unit drive pulley that is not in contact.

   Without moving the scanner unit drive shaft, manually turn the scanner unit drive pulley so that the scanner unit B is brought into contact with the stopper on the front frame side and the stopper on the rear frame side at the same time. (Change the relative positions of the scanner unit drive pulley and the drive shaft.)

   Fix the scanner unit drive pulley fixing screw.

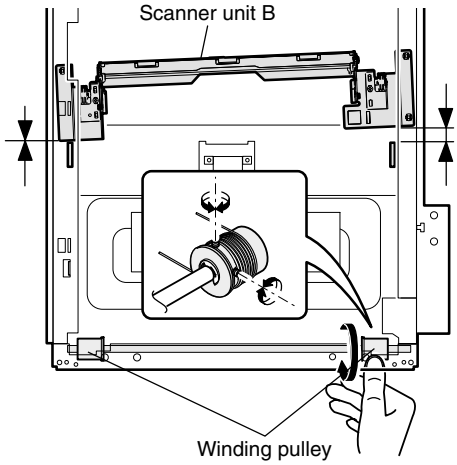

6) With the scanner unit B in contact with the both stoppers on the CCD mounting plate at the same time, fit the edge of the scanner unit A with the frame right edge and fix the scanner unit A with the screw.

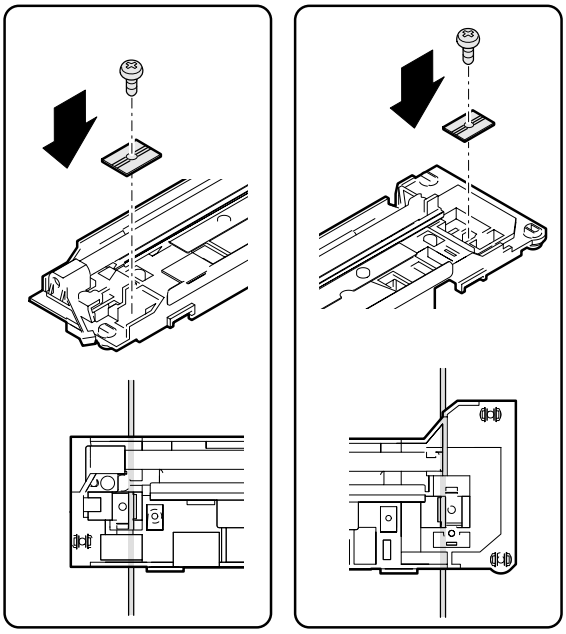

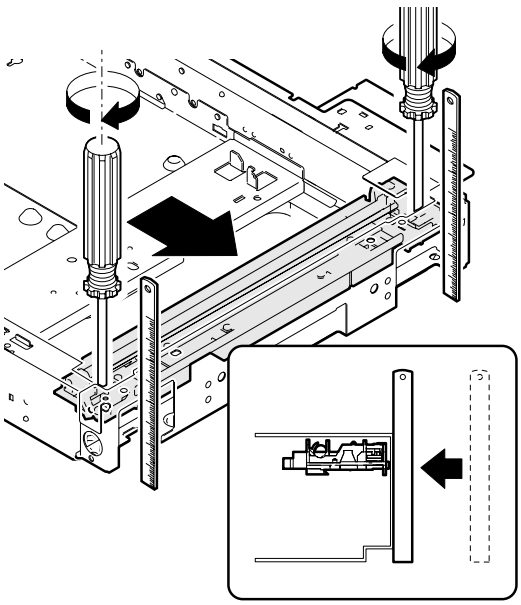

ADJ 6B Copy image sub scanning direction distortion adjustment

1) Make a test chart on A3 (11" x 17") paper as shown below. (Draw a rectangular with four right angles.)

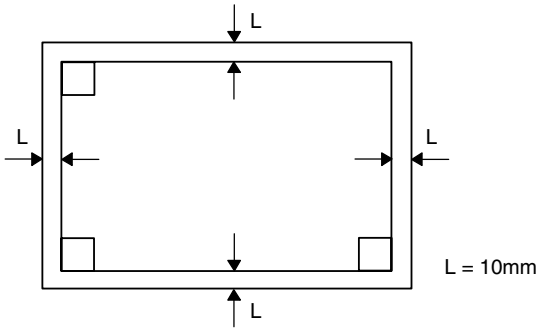

2) Set the test chart made in procedure 1) on the document table. (Leave a space of about 30mm between the reference position and the test chart.) With the document cover open, make a copy on A3 (11" x 17").

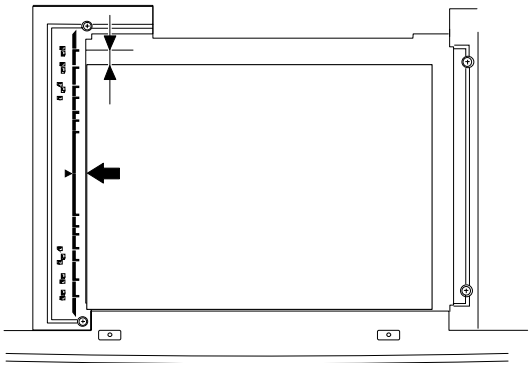

3) Check for distortion in the sub scanning direction.
If La = Lb, there is no distortion.

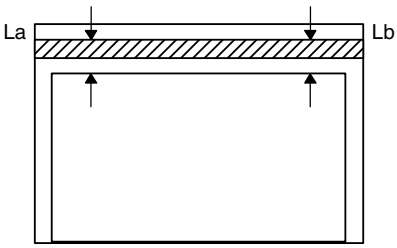

If there is some distortion in the sub scanning direction, perform the following procedures.

4) Loosen either of two fixing screws of the scanner unit drive pulley. (Either one on the front or the rear side will do.)

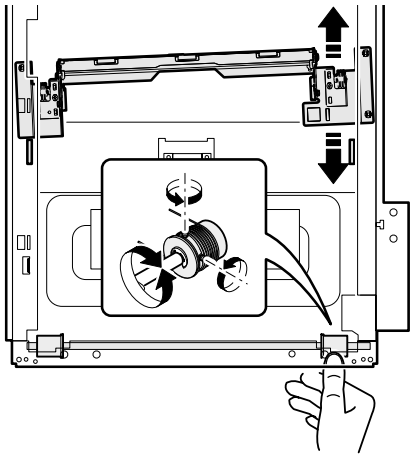

5) With the scanner unit drive shaft kept stationary, turn the scanner unit drive pulley manually to change the parallelism of scanner units A and B. (Change the relative positions of the scanner unit drive pulley and the drive shaft.)

6) Tighten the scanner unit drive pulley fixing screw.
Repeat procedures 2) – 6) until the condition of procedure 3) is satisfied.

If the distortion in the sub scanning direction cannot be deleted with the above procedures, perform ADJ 6D, Scan image distortion adjustment.

ADJ 6C Copy image main scanning direction distortion adjustment

1) Make a test chart on A3 (11" x 17") paper as shown below. (Draw a rectangle with four right angles.)

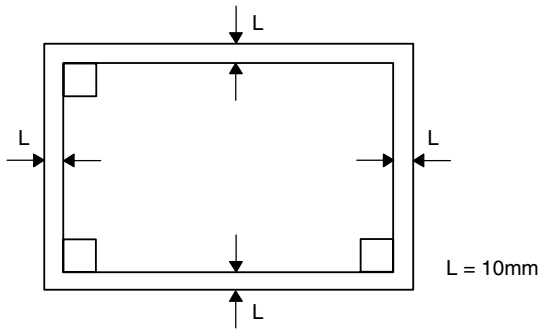

2) Set the test chart made in procedure 1) on the document table. With the document cover open, make a copy on A3 (11" x 17").
3) Check for distortion in the main scanning direction.
   If the four angles of the rectangle on the copy are right angles, there is no distortion. (Completion of the adjustment)

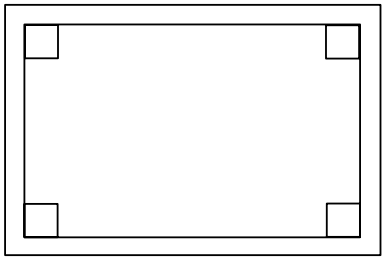

If there is some distortion in the main scanning direction, perform the following procedures

4) Check the difference (distortion balance) of left and right images distortions.

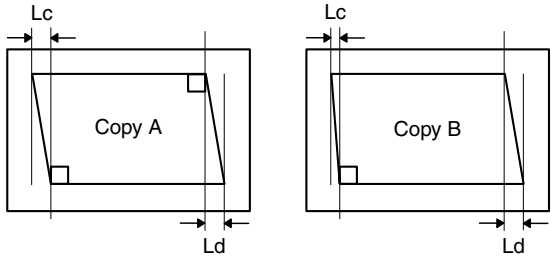

There is no difference between the distortion on the right and that on the left.
Lc = Ld

There is some difference between the distortion on the right and that on the left.
Lc ≠ Ld

   If Lc = Ld, the distortion on the left is equal to that on the right. (The distortions are balanced.)

If the above condition is satisfied, go to procedure 6).

If the above condition is not satisfied, perform the following procedure.

5) Change the height balance of the front frame side scanner rail.
   [Rail adjustment]
   1) Make a copy from the table glass, and check the copy output.
      In this case, set the test chart correctly. If it is set inclined, the adjustment cannot be made correctly.
   2) If the check result is outside the specified range, perform the following procedure.
   3) Remove the front cabinet on the scanner side, and check the installing position of the MB rail.
4) Loosen the screw on the right side of the MB rail.

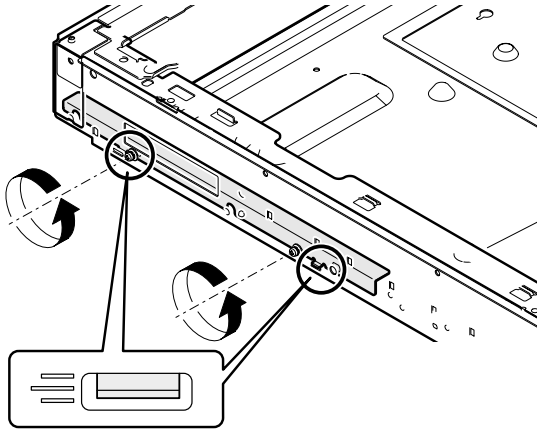

Repeat procedures 2) to 5) until the image distortions are balanced.

6) Without changing the balance between the front frame side scanner rail, change the overall height.
7) Set the test chart made in procedure 1) on the document table, and make a copy on A3 (11" x 17") paper. Check that the main scanning distortion is within the specified range.
   Perform procedures 7) to 8) until the main scanning direction distortion is in the specified range.

If this adjustment cannot remove the sub scanning direction distortion, perform ADJ 6D, Scan image distortion adjustment.

ADJ 6D Scan image distortion adjustment

If scan image distortion cannot be removed with ADJ 6A, ADJ 6B, and ADJ 6C, perform this adjustment.

Change the position of the scanner unit distortion adjustment plate on the right side of the scanner unit so that the scanner image distortion becomes minimum. The scan image distortion is adjusted by adjusting the overall mechanical distortion of the scanner unit.

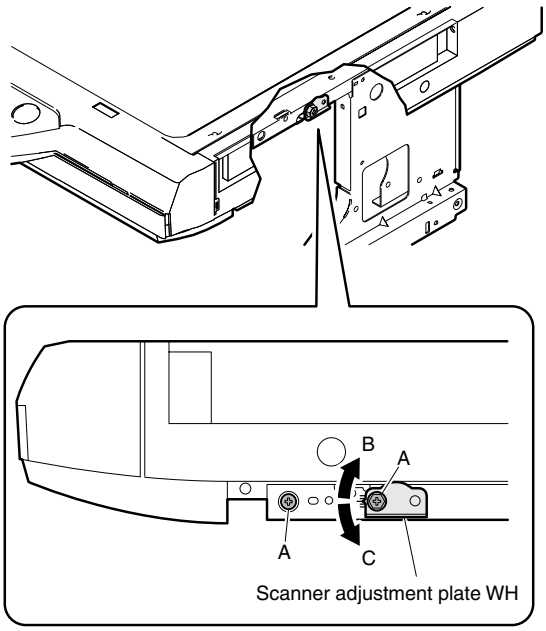

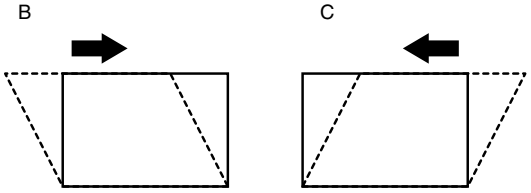

ADJ 7 Copy image focus (main scanning direction copy magnification ratio) adjustment (CCD unit position adjustment)

This adjustment must be performed in the following cases:

- When the CCD unit is removed from the machine.
- When the CCD unit is replaced.
- When the copy image focus is improper.
- When the copy magnification ratio in the copy image main scanning direction is not proper.
- When the MFP main PWB is replaced.
- When the EEPROM of the MFP main PWB is replaced.
- When a U2 trouble occurs.

1) Enter the SIM 48-1 mode.
2) Set the set item B to 50 (initial value).
3) As shown in the figure below, place a scale on the original table.

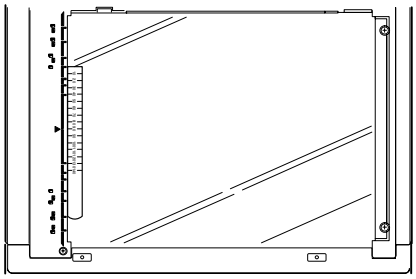

4) Make a normal copy on A4 paper.
5) Compare the scale image length and the actual scale length.
6) Obtain the main scanning direction copy magnification ratio according to the following formula.

   Main scanning direction copy magnification ratio

   $= \frac{\text{(Original dimension – Copy dimension)}}{\text{Original dimension}} \times 100\ [\%]$

(Example) Fit 10mm of the scale with 10mm of the copied scale and compare them.

Main scanning direction copy magnification ration

$= \frac{100 - 99}{100} \times 100 = 1$

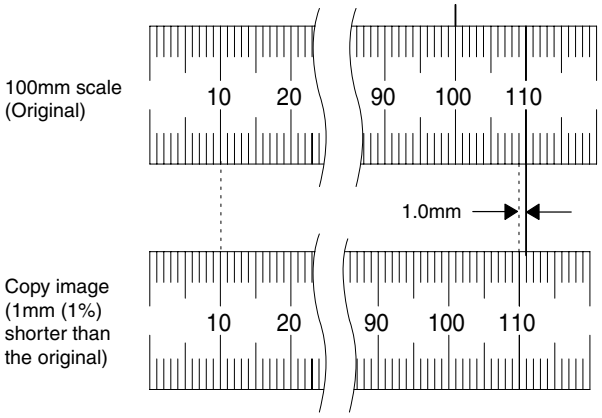

If the copy magnification ratio is not satisfactory, perform the following procedure.

7) Remove the original guide L and R, and remove the table glass.
8) Remove the dark box cover.
9) Loosen the CCD unit fixing screws.

   Draw a marking line on the CCD unit base as shown below in order to avoid a shift in the optical axis of the CCD unit.

   At that time, fix the CCD unit so that it is in parallel with the marked line in procedure 9).

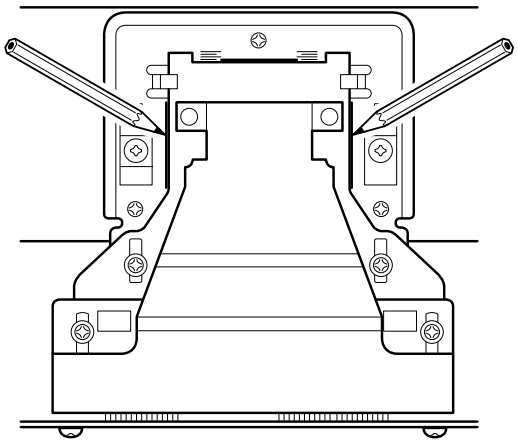

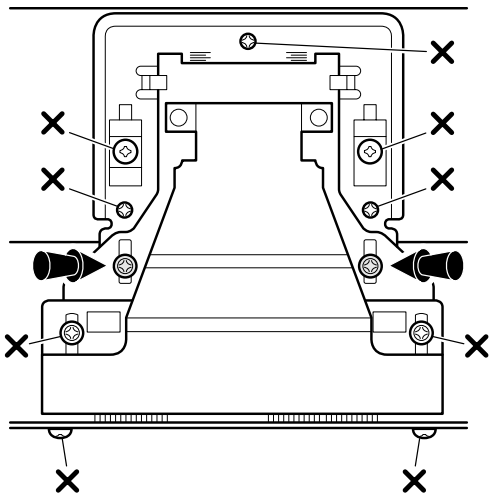

* Never loosen the screws marked with "X."
  If one of these screws is loosened, the CCD unit base position and angle may be changed. If so, it cannot be adjusted in the market, and therefore the whole scanner unit must be replaced.

10) Slide the CCD unit in the arrow direction (CCD sub scanning direction) to change the installing position.

    When the copy image is longer than the original, move in the direction of B.

    When the copy image is shorter than the original, move in the direction of A.

    One scale of scribe line corresponds to 0.2%.

    At that time, fix so that the CCD unit is in parallel with the scales on the front frame side and on the rear frame side of the CCD unit base.

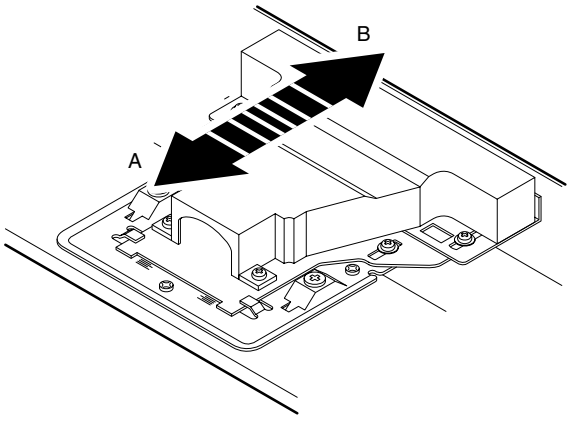

At that time, fix the CCD unit so that it is in parallel with the marked line in procedure 9).

11) Make a copy, and check the copy magnification ratio.

If the copy magnification ratio is outside the range of 100% ± 1%, repeat procedures 9) to 11) until it is in the range.

Note: Due to the structure of the optical system, when the CCD unit fixing position is changed with SIM 48-1 set to 50, the copy magnification ratio is adjusted to the specified level (100 ± 1.0%) and the specified resolution is provided.

ADJ 8 Sub scanning direction copy magnification ratio adjustment

This adjustment must be performed in the following cases:

- When the copy magnification ratio in the copy image sub scanning direction is improper.
- When the scanner motor is replaced.
- When a U2 trouble occurs.
- When the MFP main PWB is replaced.
- When the EEPROM of the MFP main PWB is replaced.

Before this adjustment, perform the focus adjustment (CCD unit installing position adjustment).

1) Place a scale on the original table as shown below.

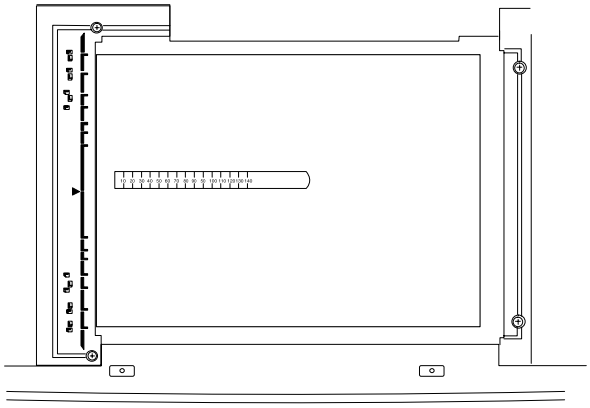

2) Enter the SIM 48-1 mode.

3) Make a normal copy and obtain the copy magnification ratios.

Copy magnification ratio

$$= \frac{\text{(Original dimension – Copy dimension)}}{\text{Original dimension}} \times 100\ [\%]$$

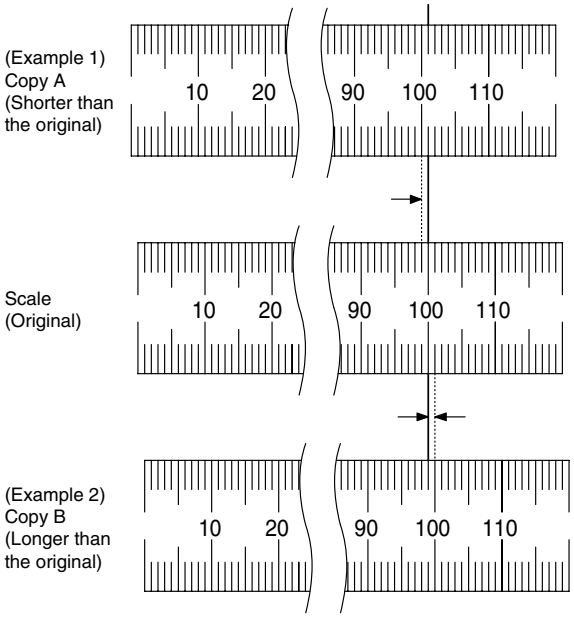

4) Check that the copy magnification ratio is within the specified range (100 ± 1.0%).

If the copy magnification ratio is within the specified range (100 ± 1.0%), the adjustment is completed.

If not, perform the following procedure.

5) Change the scan mode adjustment value of SIM 48-1.

When the adjustment value is increased, the sub scanning direction copy magnification ratio is increased.

A change in the adjustment value by 1 corresponds to a change in the copy magnification ratio by about 0.1%.

Repeat procedures 3) to 5) until the coy magnification ratio is within the specified range (100 ± 0.28%).

Note: Fix the adjustment value of SIM 48-1 adjustment mode (F – R) to 50.

ADJ 9 Main scanning direction copy image position adjustment (Scanner (reading) section)

This adjustment must be performed in the following cases:

When the scanner (reading) section is disassembled.

When the scanner (reading) unit is replaced.

When the RADF section is disassembled.

When the RADF unit is installed.

When the RADF unit is replaced.

When a U2 trouble occurs.

When the MFP main PWB is replaced.

When the EEPROM of the MFP main PWB is replaced.

1) Make a copy in the adjustment chart adjustment mode. (Document table or RADF)

2) Check the copy image center position.

If A – B = ± 4.0mm, there is no need to adjust.

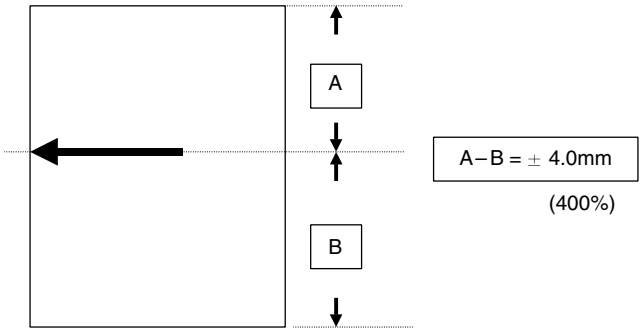

If the above condition is not satisfied, perform the following procedures.

3) Enter the SIM 50-12 mode.

4) Select the adjustment mode with the scroll key.

5) Enter the adjustment value with the 10-key and press the [OK] key.

The entered value is set.

* When the set value is increased, the image is shifted to the rear side. When the set value is decreased, the image is shifted to the front side.

When the set value is change by 1, the image is shifted by about 0.4mm.

Repeat procedures 2) to 5) until the above condition is satisfied.

ADJ 10 Copy image position/image loss/ void area adjustment

This adjustment must be performed in the following cases:

- When the scanner (reading) section is disassembled.
- When the scanner (reading) unit is replaced.
- When the resist roller section is disassembled.
- When a U2 trouble occurs.
- When the MFP main PWB is replaced.
- When the EEPROM of the MFP main PWB is replaced.

This adjustment uses SIM 50-2 and SIM 50-1.

The above two simulations are used in the following manner.

SIM 50-2: Rough adjustment

SIM 50-1: Fine adjustment

If the desired value is obtained by SIM 50-2, there is no need to perform SIM 50-1.

(Adjustment item)

No.	Adjustment item	SIM 50-2 set item	SIM 50-1 set item	Adjustment value
1	Lead edge image loss	IMAGE LOSS	IMAGE LOSS	4.0 ± 1.0mm
2	Lead edge void area	DEN-A	DEN-A	4.0 ± 1.0mm
3	Rear edge void area	DEN-B	DEN-B	4.0 ± 1.0mm
4	Image reference position		RRC-A	
5	Paper timing		RRC-B	
6	Distance between image lead edge position and scale of 10mm x 10	L1		
7	Distance between paper lead edge and image lead edge x 10	L2		

Adjustment items 1 to 3 can be adjusted either with SIM 50-1 or with SIM 50-2.

The adjustment values 6 and 7 will affect the adjustment items 4 and 5 automatically.

Therefore, adjusting the items 6 and 7 will lead to the same result as adjusting the items 4 and 5 directly.

1) Place a scale on the original table as shown below.

   Note that the scale must be placed in parallel with the scanning direction and that the scale lead edge must be in close contact with the original guide plate.

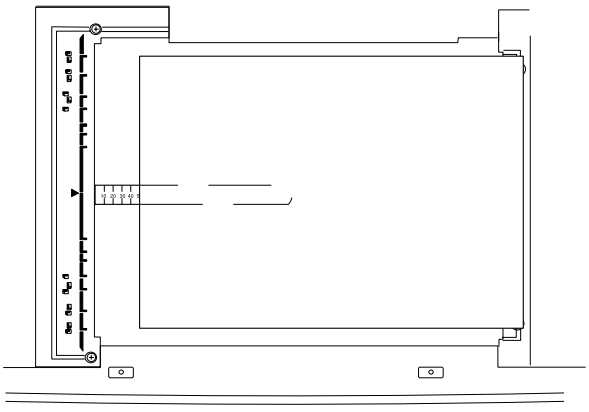

2) Enter the SIM 50-2 mode.
3) Set IMAGE LOSS and DEN-A to "20".
4) Set all the set items of L1 and L2 to "0".
5) Make a copy at 400%. (Original table mode)
6) Measure the copied image dimensions X and Y.

   X: Distance between the copy image lead edge and the scale of 10mm.

   Y: Distance between the paper lead edge and the copy image lead edge.

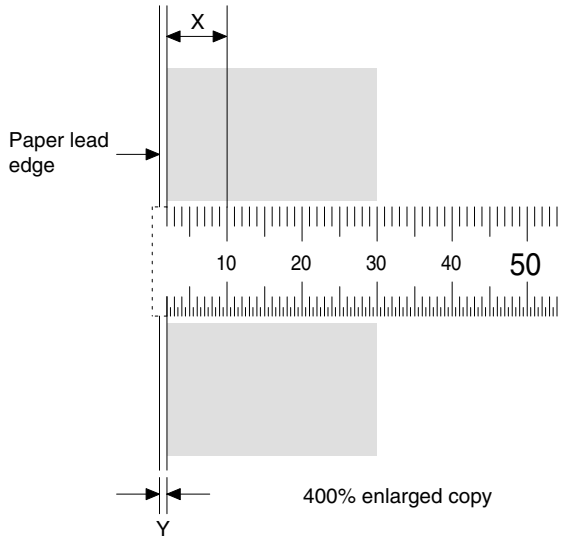

7) Multiply X, Y, and Z (unit: mm) by 10 to obtain L1, L2 respectively. Enter the values of L1, L2, and L3.

   L1 = X x 10

   L2 = Y x 10

8) Cancel the simulation, make a copy, and check that the lead edge image loss and void area are within the specified range shown below.

   Lead edge image loss: 4.0 ± 1.0mm

   Lead edge void area: 4.0 ± 1.0mm

If the above specifications are not satisfied, perform the following procedures.

9) Enter the SIM 50-1 mode.
10) Set a scale in the same manner as procedure 3), and make a copy at 50% and at 400% in the original table mode.
11) Measure the distance between the paper lead edge and the copy image lead edge of 50% copy and of 400% copy.
12) Check that there is no difference between the above distance of 50% copy and that of 400% copy.

    If there is a difference of 1.5mm or above, change the adjustment value of RRC-A.

Repeat procedures 10) to 12) until the above specification is satisfied.

13) If the lead edge void area is not within the specified range, change the DEN-A value.
14) If the lead edge void area is not within the specified range, change the IMAGE LOSS value.
15) If the rear edge void area is not within the specified range, change the DEN-B value.

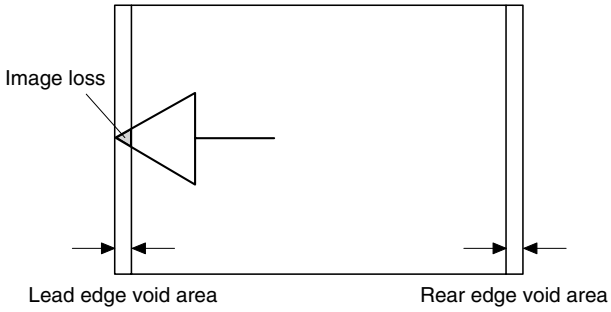

	Adjustment item	Adjustment value	Note
IMAGE LOSS	Lead edge image loss	4.0 ± 1.0mm	The greater the set value is, the greater the image loss is.
DEN-A	Lead edge void area	4.0 ± 1.0mm	The greater the set value is, the greater the void area is.
DEN-B	Rear edge void area	4.0 ± 1.0mm	The greater the set value is, the greater the void area is.

ADJ 11 Copy color balance/density adjustment

(1) Note for the copy color balance/density adjustment

(Necessary conditions for execution of the copy color balance/density adjustment)

Before execution of the copy color balance/density adjustment, check that all the adjustments related to the copy color balance and density have been completed properly.

The importance level is as shown below.

(Adjustment items which directly affect the copy color balance and density and must be checked or adjusted before execution of the image quality adjustment)

1) Adjustment items: ADJ 2, ADJ 3, ADJ 4

JOB No	ADJUSTMENT ITEM LIST			SIMULATION
ADJ 2	Image density sensor adjustment			44-36
ADJ 3	Image focus, image skew adjustment (LED (writing) unit)			64-1/61-4
ADJ 4	Image registration adjustment	ADJ 4A	Image registration adjustment (Auto adjustment)	50-22
		ADJ 4B	Image registration adjustment (Manual adjustment)	50-20

The user color balance adjustment must be set to the center (default).

Item	Purpose	Note
User color balance setting: Default (Center) (Special function)	Set the color balance to the standard state.	Check that it is set to the center.

The set value of SIM 46-27 is set to the default.

SIM No	Display/Item		Setting (Default)	Content	Phenomenon when the set value is changed	Phenomenon occurring when the adjustment value is not within the normal value range.	Note
46-27	A	BLACK TEXT (SLOPE)	50	Black image edge section gamma (tilt) adjustment (Black text and black line reproduction adjustment)	When the set value is increased, the contrast of black line and black text outline sections is reduced. On the contrary, when the set value is decreased, the contrast is increased. (Sharpness of black text and black lines is changed.) (Text/ Printed photo, Text, Text/ Photograph copy mode)	The contrast and density of lines and text outline section are changed. (Sharpness of text and lines is changed.) (Text/ Printed photo, Text, Text/ Photograph copy mode)	For image quality adjustment, set to 50.
	B	BLACK TEXT (INTERCEPT)	50	Black image edge section density (overall level) adjustment (Black txt and black line reproduction adjustment)	The density of black lines and black text outline is changed. (Text/Printed photo, Text, Text/Photograph copy mode)		

The set value of the following simulation must be set to the default.

SIMNo	Item	Setting (Default)	Phenomenon when the set value is changed	Note
46-1	A – R	50	The density and color balance in the low density section of color copy are changed.	Set to the default when adjusting the copy quality. Do not adjust the density in the low density section by using this simulation.
46-2	A – O	50	The density in the low density section of monochrome copy is changed.	
46-10 to 16	A – O	500	The color copy density and color balance are changed. (each copy mode)	Set to the default when adjusting the copy quality.
46-20	A – O	500	The color copy density and color balance of all copy modes are changed.	Set to the default when adjusting the copy quality.

The following functions (HV/HT/TC/RRM/MD) of SIM 44-1 must be set to Enable.

Item		Setting	Phenomenon when set to Disable	
HV	Image forming section correction (process correction) (High-density image density correction)	ENABLE	The developing bias voltage correction and the main charger grid voltage correction are not performed.	Insufficient image density, background coy, improper color balance
HT	Half-tone image density correction	ENABLE	The half-tone image density correction is not performed.	Improper half-tone image density, background copy, improper color balance, tone jump
TC	Transfer output correction	ENABLE	Correction of change due to humidity and correction of the transfer voltage are not performed.	Half-ton image section roughness, improper image density, insufficient density inside of image outlines
RRM	RRM speed correction	ENABLE	Correction of change due to humidity and correction of the rotate speed are not performed.	Improper color balance, roughness, background coy, toner dispersion, improper image density, image deflection, image flow, image dirt
MD	Photoconductor membrane decrease (sensitivity/potential) correction	ENABLE	Correction of use frequency (sensitivity change) of OPC drum is not performed. (Main charger grid voltage correction)	Improper image density, background copy
AR	Image registration automatic adjustment		Does not affect during image quality adjustment.	
AR CHK	YES/NO of error judgment in image registration automatic adjustment		Does not affect during image quality adjustment.	

(Adjustment items which affect the copy color balance/density but need not to be adjusted frequently. When, however, a trouble occurs, check and adjustment must be made.)

1) Adjustment item: ADJ 1, ADJ 7, ADJ 12, ADJ 13

JOB No	ADJUSTMENT ITEM LIST			SIMULATION
ADJ 1	High voltage adjustment	ADJ 1A	Main charger grid voltage adjustment	8-2
		ADJ 1B	DV bias voltage adjustment	8-1
		ADJ 1C	Transfer voltage adjustment	8-6
ADJ 7	Copy image focus (main scanning direction copy magnification ratio) adjustment (CCD unit position adjustment)			48-1
ADJ 12	Fusing pressure adjustment			
ADJ 13	Fusing paper guide position adjustment			

(Relationship between the service contents and the copy color balance/density adjustment)

Note that procedures before and after the copy color balance/density adjustment differ depending on the machine status and the servicing job contents.

Perform proper procedures according to the flow of the copy color balance/density adjustment.

There are following five major cases:

1) When installing
2) When periodic maintenance
3) When consumable part is replaced in repair work
4) When consumable part is not replaced in repair/checking work
5) Other repair/check

(2) Copy color balance/density adjustment procedure flow

Follow the flowchart to perform the copy color balance/density adjustment.

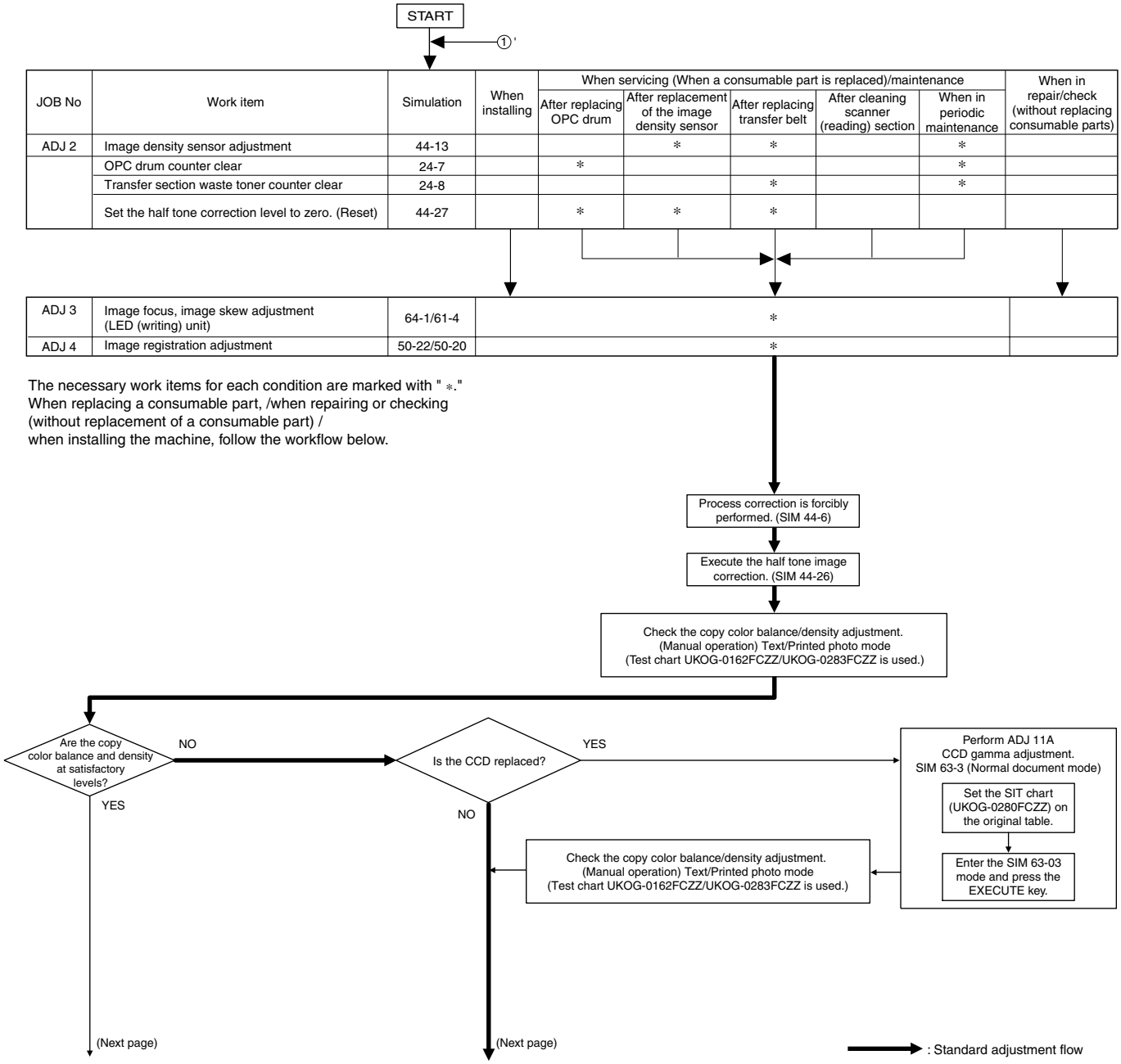

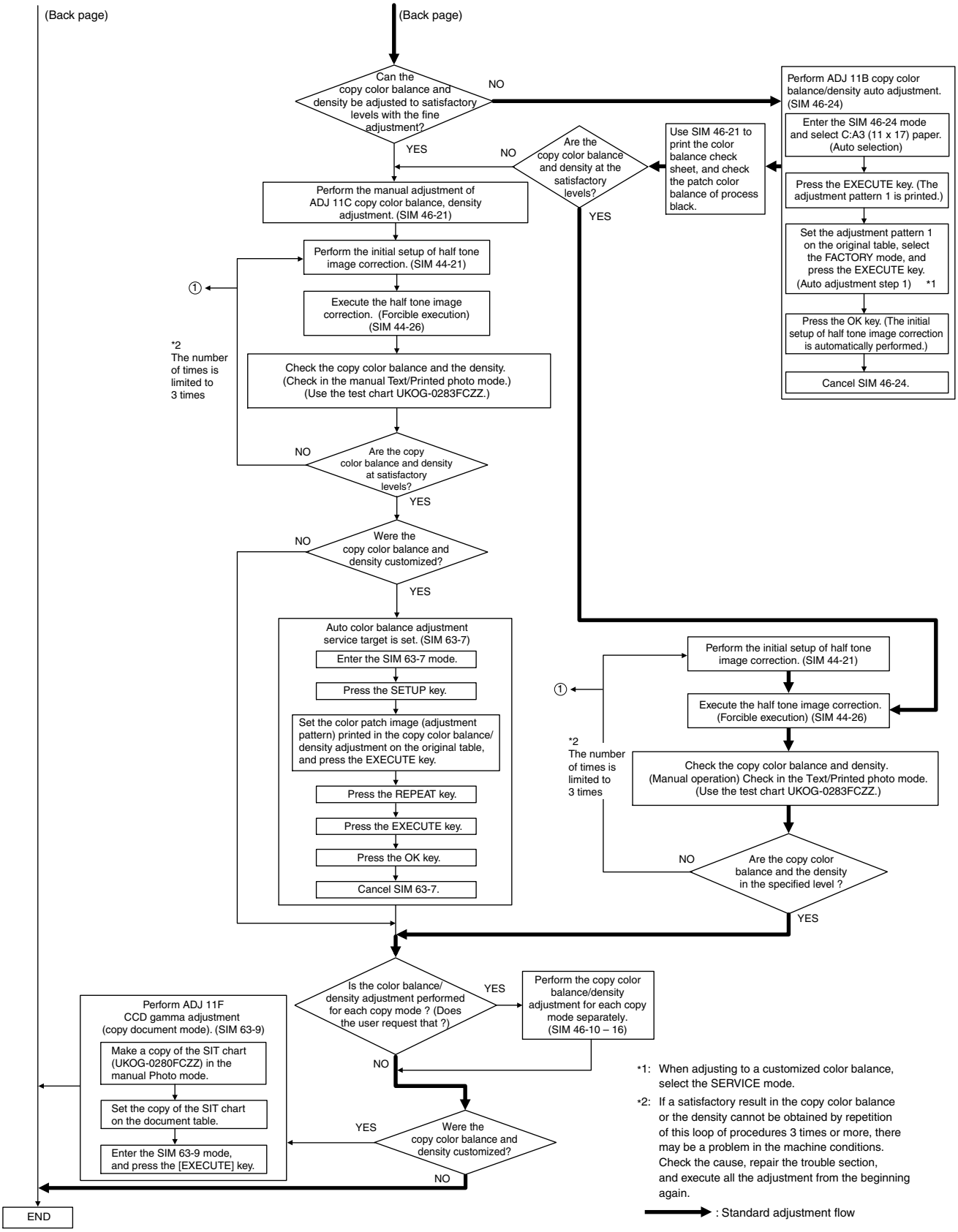
(Back page)
(Back page)
Can the copy color balance and density be adjusted to satisfactory levels with the fine adjustment?
NO
YES
Perform ADJ 11B copy color balance/density auto adjustment. (SIM 46-24)
Enter the SIM 46-24 mode and select C:A3 (11 x 17) paper. (Auto selection)
Press the EXECUTE key. (The adjustment pattern 1 is printed.)
Set the adjustment pattern 1 on the original table, select the FACTORY mode, and press the EXECUTE key. (Auto adjustment step 1) *1
Press the OK key. (The initial setup of half tone image correction is automatically performed.)
Cancel SIM 46-24.
Are the copy color balance and density at the satisfactory levels?
NO
YES
Use SIM 46-21 to print the color balance check sheet, and check the patch color balance of process black.
Perform the manual adjustment of ADJ 11C copy color balance, density adjustment. (SIM 46-21)
Perform the initial setup of half tone image correction. (SIM 44-21)
Execute the half tone image correction. (Forcible execution) (SIM 44-26)
Check the copy color balance and the density. (Check in the manual Text/Printed photo mode.) (Use the test chart UKOG-0283FCZZ.)
*2 The number of times is limited to 3 times
Are the copy color balance and density at satisfactory levels?
NO
YES
Were the copy color balance and density customized?
NO
YES
Auto color balance adjustment service target is set. (SIM 63-7)
Enter the SIM 63-7 mode.
Press the SETUP key.
Set the color patch image (adjustment pattern) printed in the copy color balance/ density adjustment on the original table, and press the EXECUTE key.
Press the REPEAT key.
Press the EXECUTE key.
Press the OK key.
Cancel SIM 63-7.
Perform the initial setup of half tone image correction. (SIM 44-21)
Execute the half tone image correction. (Forcible execution) (SIM 44-26)
*2 The number of times is limited to 3 times
Check the copy color balance and density. (Manual operation) Check in the Text/Printed photo mode. (Use the test chart UKOG-0283FCZZ.)
Are the copy color balance and the density in the specified level ?
NO
YES
Is the color balance/ density adjustment performed for each copy mode ? (Does the user request that ?)
YES
Perform the copy color balance/density adjustment for each copy mode separately. (SIM 46-10 – 16)
NO
Perform ADJ 11F CCD gamma adjustment (copy document mode). (SIM 63-9)
Make a copy of the SIT chart (UKOG-0280FCZZ) in the manual Photo mode.
Set the copy of the SIT chart on the document table.
Enter the SIM 63-9 mode, and press the [EXECUTE] key.
Were the copy color balance and density customized?
YES
NO
END
*1: When adjusting to a customized color balance, select the SERVICE mode.
*2: If a satisfactory result in the copy color balance or the density cannot be obtained by repetition of this loop of procedures 3 times or more, there may be a problem in the machine conditions. Check the cause, repair the trouble section, and execute all the adjustment from the beginning again.
: Standard adjustment flow

Copy color balance and density check

Check the color balance and the density by making copies of Sharp gray chart and the serviceman chart.

a. Note for the copy color balance check

To check the copy color balance and density, use the Sharp gray chart and the serviceman chart. In the (Manual) Text/Printed photo mode, set the copy density level to 3, and make a color copy and a B/W copy.

At that time, all the color balance adjustments of the user adjustment mode must be set to the default (center).

Be sure to use the specified paper for color.

[Sharp gray chart] (UKOG-0162FCZZ)

The copy image density of Sharp gray chart must be as follows:

Note: Use the color test chart (UKOG-0283FCZZ) to check the color balance.

(Color copy)

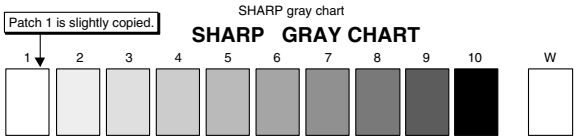

(Black-and-white copy)

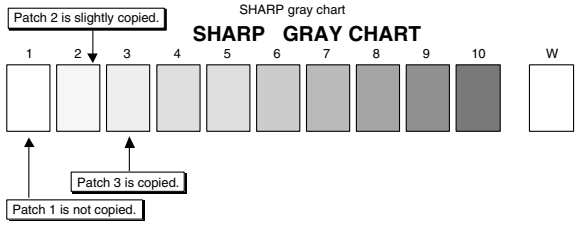

[Serviceman chart] (UKOG-0283FCZZ)

Check the color balance of Serviceman chart copy is as shown below.

(Color copy)

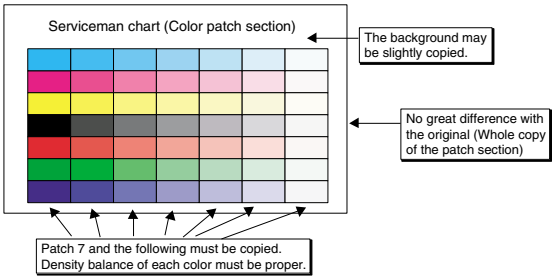

ADJ 11A CCD gamma adjustment (CCD calibration) (Normal document copy mode)

This adjustment must be performed in the following cases:

- When the CCD unit is replaced.
- When a U2 trouble occurs.
- When the MFP PWB is replaced.
- When the EEPROM of the MFP PWB is replaced.
- When replacing a part in the scanner (reading) section.

When the CCD unit is replaced, be sure to perform this adjustment.

(1) Precautions for adjustment

1) Check that the table glass and No. 1, 2, 3 mirrors and lenses are free from dust and dirt. (If there is dust and dirt, clean with alcohol.)
2) Check that there is no dirt or scratch on BK1 and BK2 patches of SIT chart (UKOG-0280FCZZ).

   If there is dirt, clean with alcohol.

   If there is scratch, replace the chart with new one.

(2) Adjustment procedures

1) Set the SIT chart (UKOG-0280FCZZ) to the left edge of the original table, and fit the center of SIT chart with the center of the glass holder.

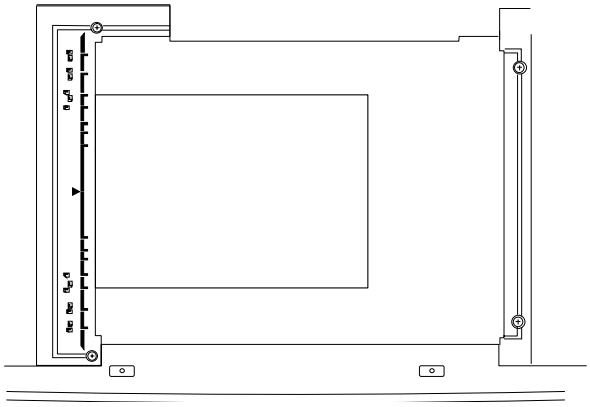

When SIT chart is not available, execute SIM 63-5 to set the CCD gamma to the default. This method, however, provides a lower adjustment accuracy than the method by using SIT chart.

Note: Check that the SIT chart (UKOG-0280FCZZ) is closely placed on the original table.

2) With the SIT chart (UKOG-0280FCZZ) fixed, close the original cover.
3) Enter the SIM 63-03 mode, and press the [EXECUTE] key.

   The automatic adjustment is started. During the automatic adjustment, the [EXECUTE] key is highlighted. When the adjustment is completed, the key returns to the normal display.

Note: The SIT chart (UKOG-0280FCZZ) is affected by light (especially by ultraviolet rays) and temperature and humidity. Put it in a bag (clear file, etc.) and store in a dark place.

ADJ 11B Copy color balance adjustment (Auto adjustment)

This adjustment must be performed in the following cases:

- When a consumable part (developer, OPC drum, the transfer belt) is replaced.
- When the CCD unit is replaced.
- When a U2 trouble occurs.
- When the MFP PWB is replaced.
- When the EEPROM of the MFP PWB is replaced.

The color balance adjustment (auto adjustment) is the automatic adjustment of cyan, magenta, yellow, and black copy density with SIM 46-24.

(When this adjustment is performed, the color balance adjustments in all the copy modes are renewed.)

(Note for performing the color balance adjustment (Auto adjustment))

1) The print engine section must be properly adjusted.
2) CCD gamma adjustment must be properly adjusted.
3) When setting the color patch image (adjustment pattern) paper on the original table, place 5 sheets of white paper on the color patch image paper.
4) Be sure to use the specified color paper.

Before execution of the copy quality check and the copy quality adjustment, be sure to execute the following corrections forcibly to set the image forming section to the optimum state.

- Execute the process correction forcibly. (SIM 44-6)
- Execute the half-tone image correction forcibly. (SIM 44-26)

a. Outline

The color balance adjustment (auto adjustment) is the automatic adjustment of cyan, magenta, yellow, and black copy density with SIM 46-24 or user program.

There are following two modes of auto color balance adjustment:

1) Auto color balance adjustment by the serviceman (with SIM 46-24)
2) Auto color balance adjustment by the user (with the user program) (The color balance target becomes the service target.)

   The auto color balance adjustment by the user is provided in order to reduce the number of service calls.

   If the copy color balance is shifted by some reason, the user performs the color balance adjustment to correct it.

   If, however, there is a basic problem in the machine, or if the machine environment is changed largely, this function does not serve as an effective means.

   While the automatic color balance adjustment by the serviceman allows adjustment even when the machine environment is changed largely, providing normal color balance. If there is a basic problem in the machine, repair it and adjust to provide normal color balance.

   The above points must be fully understood for proper operation.

   When this adjustment is performed, the color balance adjustment of all the copy modes are changed.

b. Adjustment procedure

(Auto color balance adjustment by the serviceman)

1) Enter the SIM 46-24 mode.
2) Press the [EXECUTE] key.

   (A3 or 11 x 17 paper is automatically selected.)

   The color patch image (adjustment pattern) is printed.
3) Set the color patch image (adjustment pattern) printed in procedure 2) on the original table so that the dark density side of the color patch image comes to the left side. Place 5 sheets of white paper on the color patch image (adjustment pattern) paper.
4) Press the FACTORY key on the operation panel and press the [EXECUTE] key.

   The copy color balance adjustment (step 1) is automatically performed, and the color balance check patch image is printed. Wait for a while until the operation menu of procedure 5) is displayed.

   When the color balance is customized by the manual color balance (SIM 46-21) according to the user's request and then the color balance is registered as the service target by SIM 63-7, select the service target in order to adjust to that color balance.

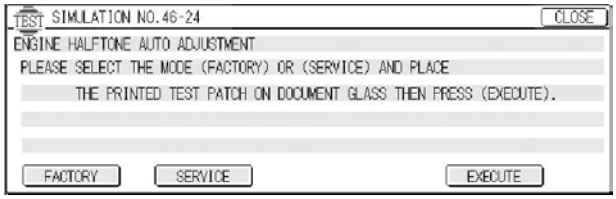

Note: (Descriptions on the factory and the service key button in the color balance automatic adjustment menu)

There are two kinds of gamma targets for the color balance automatic adjustment: factory and service.

The factory key button and the service key button are used to select between them.

Factory target gamma: Standard color balance (Fixed)

Service target gamma: Color balance can be customized according to the user request. (Variable)

When shipping from the factory, the service target gamma data are same as the factory target gamma data.

Both are set to the standard color balance gamma.

In the service target, a customized color balance can be registered with SIM 63-7. In the factory target, it cannot be changed.

5) Press the OK key on the operation panel.

   The initial setup of half tone image correction is performed according to this adjustment data.

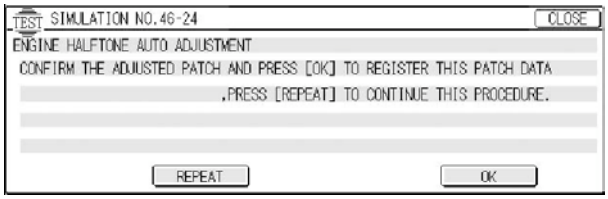

Note: When OK key is pressed, initial setup of half-tone image correction is started. During this operation, "Copy Quality is being adjusted" is displayed. It takes several minutes to complete this operation.

After completion of this operation, "Please quit this mode" is displayed.

Do not cancel the simulation until "Please quit this mode" is displayed.

6) Check that the color balance check patch image printed at last is within the specified range shown below.

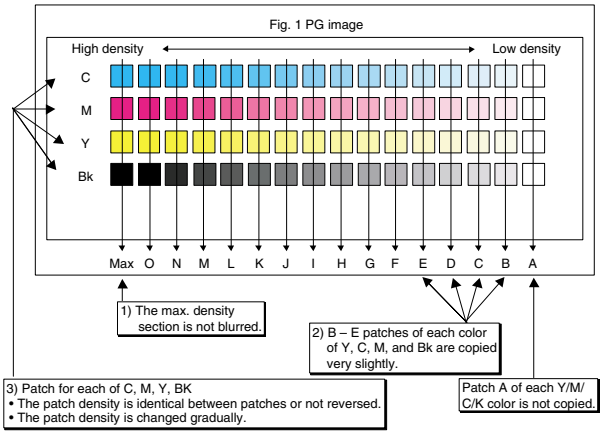

The print density should vary gradually from the lower density to the higher density without reversion of changing direction.

The density level of each color should be almost the same.

It is acceptable for patch B not to be copied.

Patch A is not copied.

Use SIM 46-21 to print the color balance adjustment sheet and compare each process (CMY) black patch color balance and the black patch. This allows a correct check on the color balance adjustment result.

If the color balance of each process (CMY) black patch in A to O is near the black patch referring to the patch, it is judged that the color balance has been correctly adjusted.

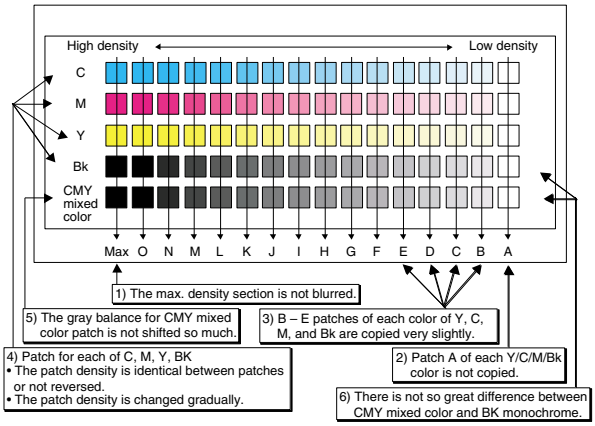

If, however, the user requests to customize the color balance instead of using the standard color balance and the color balance is in a satisfactory level, go to Step 10).

If the color balance is not satisfactory, perform the manual color balance adjustment (ADJ 11C).

7) Execute the half tone image correction. (Forcible execution) (SIM 44-26)

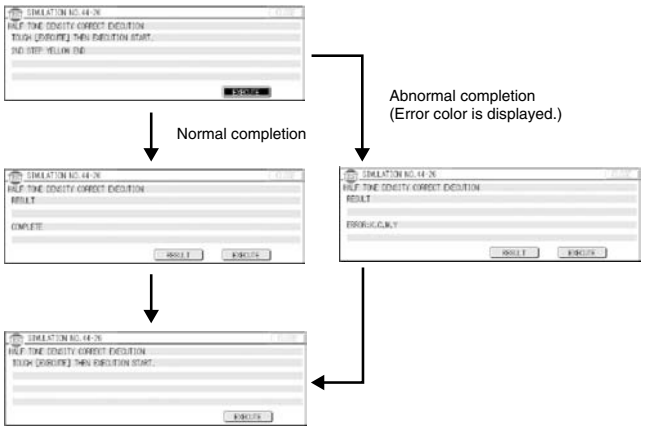

When [EXECUTE] key is pressed, it is highlighted and the operation is started. It takes several minutes to complete the operation. When the operation is completed, the screen returns to the original state.

After completion of the operation, cancel the simulation.

8) Use the test chart UKOG-0283FCZZ and check the copy color balance and the density in Text/Photo mode. (Refer to the section of the copy color balance and the density.)

If the copy color balance and density are not in the satisfactory level, perform the following procedures.

9) Perform initial setup of half tone image correction. (SIM 44-21)

10) Perform half tone image correction. (Forcible execution) (SIM 44-26)

11) Use the test chart UKOG-0283FCZZ and check the copy color balance and the density in manual Text/Printed photo mode. (Refer to the section of the copy color balance and the density.)

Repeat procedures 9) to 11) until they are at the satisfactory level.

However, repetition is limited to three times.

If a satisfactory result in the copy color balance or the density cannot be obtained by repetition of the above procedures 3 times or more, there may be a problem in some other sections.

Investigate the reason and repair or fix the problem, then perform all the procedures of print quality adjustment from the beginning.

If a satisfactory result in the copy color balance or the density cannot be obtained by the automatic adjustment, use SIM46-21 (ADJ11C) (automatic adjustment).

ADJ 11C Copy color balance adjustment (Manual adjustment)

This adjustment must be performed in the following cases:

- When a consumable part (developer, OPC drum, the transfer belt) is replaced.
- When the CCD unit is replaced.
- When the scanner (reading) section is cleaned.
- When a U2 trouble occurs.
- When the MFP PWB is replaced.
- When the EEPROM of the MFP PWB is replaced.

The color balance adjustment (Manual) is used to manually adjust each color copy density (C, Y, M, K) (15 points for each color) when the result of the previous automatic adjustment is unsatisfactory or when a fine adjustment is required, or when the user requests to change (customize) the color balance.

a. Note for the adjustment

This adjustment is performed only for the color patch whose result of the previous automatic adjustment is unsatisfactory.

If the color balance is out of the normal conditions, execute SIM 46-24 to make the color balance adjustment (Auto) and then execute this adjustment. This sequence leads to a better work efficiency.

Before execution of the copy quality check and the copy quality adjustment, be sure to execute the following corrections forcibly to set the image forming section to the optimum state.

* Execute the process correction forcibly. (SIM 44-6)
* Execute the half tone image correction forcibly. (SIM 44-26)

b. Adjustment procedures

* Before executing the copy color balance adjustment (Manual), perform SIM 44-6 to make a compulsory process correction, updating the developing bias voltage and the main charger voltage to the latest levels.

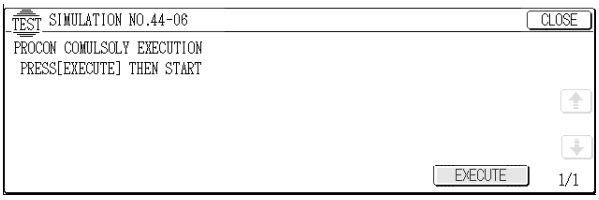

When [EXECUTE] key is pressed, the operation is started.

It takes several minutes to complete the operation. When the operation is completed, "COMPLETE" is highlighted.

After completion of the operation, cancel the simulation.

1) Enter the SIM 46-21 mode.

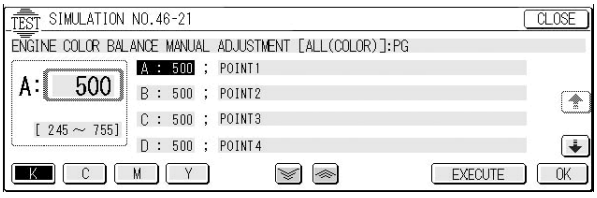

2) Select PAPER SEL with the scroll key and select A3 (11 x 17) paper.

Enter the set value corresponding to the paper feed section with A3 (11 x 17) paper in it, and press the OK key.

3) Press the [EXECUTE] key.

The color balance adjustment pattern is printed.

4) Check that the printed pattern is in the following specification or in the desired color balance.

If not, perform the following procedures.

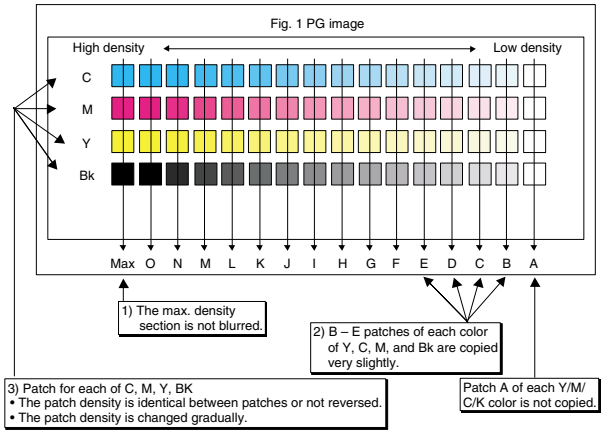

The print density should vary gradually from the lower density to the higher density without reversion of changing direction.

The density level of each color should be almost the same.

It is acceptable for patch B not to be copied.

Patch A is not copied.

When, however, the color balance is adjusted according to the users request, there is no need to adjust to the standard color balance as stated above.

5) Select the color to be adjusted and select the adjustment point with the scroll key.

6) Enter the adjustment value with the 10-key and press the OK key.

   The adjustment value can be selected in the range of 245 to 755 (1 to 999). When SIM 46-24 is used to perform the automatic color balance and the density adjustment, all the set values of this simulation are set to 500.

   To increase the density, increase the adjustment value. To decrease the density, decease the adjustment value.

   Repeat procedures 3) to 6) until the condition of procedure 4) is satisfied.

When the overall density is low or patch A is copied with a high density, use the arrow keys to change all the adjustment values of A to O simultaneously and uniformly.

Then perform the patch density adjustment. This allows to make an efficient adjustment.

By using the black patch as the reference, adjust so that the color balance of the black patch of each process (CMY) in A to O becomes virtually same as the black patch.

In this simulation mode, press CLEAR key to return to the normal copy mode and make actual copies of the service chart and user documents. Check the adjustment result.

7) Execute SIM 44-21.

   The initial setup of half tone image correction is performed.

This procedure is to store the copy color balance adjustment data as the reference data for half-tone correction.

This procedure should be always executed immediately after completion of ADJ 11C (Color balance adjustment (Manual)) with SIM 46-21.

When ADJ 11B (Color balance adjustment (Auto)) is performed with SIM 46-24, this procedure is automatically performed.

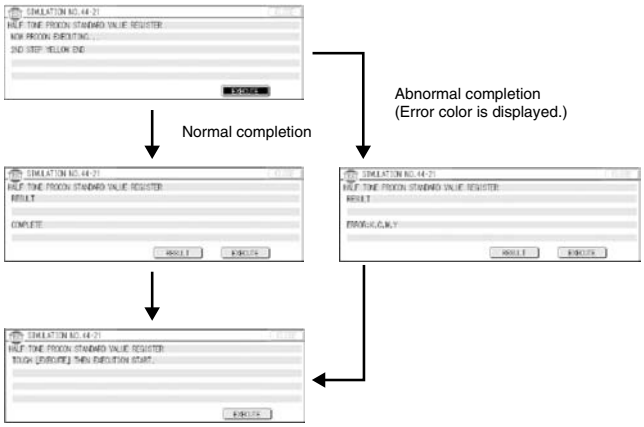

When [EXECUTE] key is pressed, it is highlighted and the operation is started.

It takes several minutes to complete the operation. When the operation is completed, the screen returns to the original state.

After completion of the operation, cancel the simulation.

8) Execute the half tone image correction. (Forcible execution) (SIM 44-26)

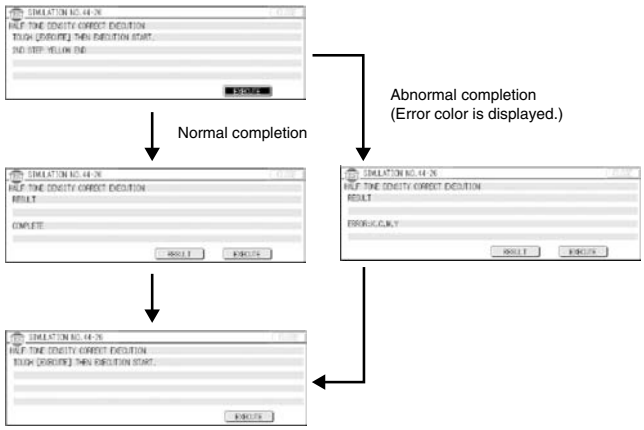

When [EXECUTE] key is pressed, it is highlighted and the operation is started. It takes several minutes to complete the operation. When the operation is completed, the screen returns to the original state.

After completion of the operation, cancel the simulation.

9) Use the test chart UKOG-0283FCZZ and check the copy color balance and the density in the Text/Printed photo mode. (Refer to the section of the copy color balance and the density check.)

   If the copy color balance and the density are not in the specified level, repeat procedures 7) through 9) until they are in the specified level.

However, repetition is limited to three times. If repetition of the above procedures does not set the copy color balance and the density to the specified level, there may be some other reason.

Investigate the reason and repair or fix the problem, then perform all the procedures of print quality adjustment from the beginning.

10) When the color balance is customized, register the color balance as the service target by SIM 63-7.

   When the color balance is not customized, there is no need to perform this work.

   If the customized color balance is registered as the service target, when the color balance is adjusted in the next time, the automatic color balance adjustment mode can be used.

   In the next color balance adjustment, select the service target color balance in the automatic color balance adjustment mode, and the color balance will be adjusted to the same color balance as registered this time.

(Auto color balance adjustment service target gamma setup)

a. Outline

Auto color balance adjustment is performed with a certain color balance (gamma) as a target.

There are following two kinds of targets:

Only the service target among them allows optional setup of a color balance (gamma) target.

This setup must be performed in the following cases.

- When the copy color balance and the density adjustment is manually performed. (SIM 46-21)
- When a U2 trouble occurs.
- When the MFP PWB is replaced.
- When the EEPROM on the MFP PWB is replaced.
- When the user requests to customize the color balance.
- When the service target gamma is found to be incorrect.

Kinds of color balance (gamma) target

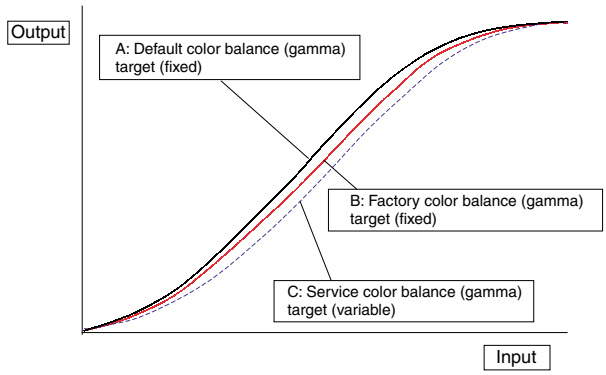

Note: The above figure is for a brief description, and does not show the actual state.

Kinds		Descriptions
A	Default color balance (gamma) target (fixed)	This is the average, standard color balance (gamma) target determined by the machine design. This color balance (gamma) target is identical in all the machines, without consideration for individuality of machines. When SIM 63-8 is executed, the service color balance (gamma) target becomes the same as this target. In SIM 46-24 menu, this target is not displayed.
B	factory color balance (gamma) target (fixed)	This is the standard color balance (gamma) target which was registered (set) in the factory, and cannot be changed in the market. This color balance (gamma) target is set depending on individuality of each machine to obtain the standard color balance. It, therefore, differs slightly in different machines. When the service target falls into an abnormal state by some reasons, this target can be used instead of it. When shipping, this target is the same as the service color balance (gamma) target.
C	Service color balance (gamma) target (variable)	This is the color balance target which the serviceman can register (set). This is obtained by registering (setting) with SIM 63-7 the adjustment pattern of the color balance (gamma) which was adjusted with SIM 46-21. This color balance (gamma) target is set depending on individuality of each machine to obtain the standard color balance. It, therefore, differs slightly in different machines. However, an optional color balance (gamma) target can be set according to a user's request. When shipping, this target is the same as the factory color balance (gamma) target. When SIM 63-8 is executed, the service color balance (gamma) target becomes the same as the default color balance (gamma) target. This target is used at the auto color calibration by user.

Note: Do not execute SIM 63-8 unless there is any special reason.

(Meaning of the service target gamma data and purpose of registration)

This work must be executed only when the color balance is customized by SIM 46-21.

If the color balance is not customized, there is no need to perform this work.

Execute SIM 46-21 to adjust the color balance (Manual) according to the user request (customized color balance). Then use the adjustment pattern printed in this mode to register the service target gamma data with SIM 63-7.

This will revise the service target gamma data.

It is recommendable to record the adjustment pattern printed in the above procedure. By using the adjustment pattern, the same color balance target can be registered in another machine. It is also useful to register the service target gamma data again.

Be careful, however, not to fold the pattern or avoid discoloration and dirt.

Basically the service target gamma data must be registered immediately after completion of the color balance adjustment (Manual) with SIM 46-21.

If a considerable time has passed after completion of the color balance adjustment (Manual) with SIM 46-21, the color balance of the adjustment pattern after a considerable time differs from that before a considerable time. Do not use such an adjustment pattern.

Whether the service target gamma data are correct or not can be determined by the following.

When the adjustment result of SIM 46-24 color balance adjustment (Auto) by selecting the service target is abnormal or unsatisfactory:

In this case, the service target gamma data may be incorrect.

The possible cause is incorrectness or abnormality of the color balance adjustment pattern used when registering the service target gamma data of the color balance adjustment (Auto) with SIM 63-7.

The color balance adjustment pattern is printed after the color balance adjustment (Manual) with SIM 46-21. The possible cause lies in this procedure.

b. Setup procedure

(Procedure to set the an optional color balance (gamma) as the service target)

1) Two sheets of color patch image (adjustment pattern) are outputted in the copy color balance adjustment (manual adjustment) (SIM 46-21). (ADJ 11C)

   At that time, when the color balance is shifted from the standard, an adjustment is required. If not, there is no need to adjust.
   If an optional color balance is required according to the user's request, an adjustment is required.

2) Enter the SIM 63-7 mode.

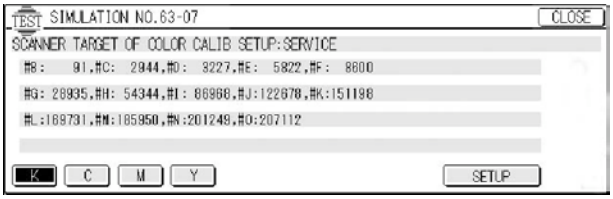

3) Press the SETUP key.

4) Set the color patch image (adjustment pattern) paper properly adjusted and printed in the copy color balance adjustment (manual adjustment) (SIM 46-21) (ADJ 11C) on the original table.

The color patch image (adjustment pattern) printed by SIM 64-2 may be used. In this case, check that the printed image is proper. (The other color patch images (adjustment patterns) printed by another machine may be used.)

Set the paper on the original table so that the darker density side comes on the left side. Then place 5 sheets of white paper on the color patch image (adjustment pattern).

If it is difficult to adjust the color balance adjustment (Manual) with SIM 46-21 satisfactorily level, do not register the service target gamma data with SIM 63-7.

5) Press the [EXECUTE] key.

The color patch image (adjustment pattern) is read.

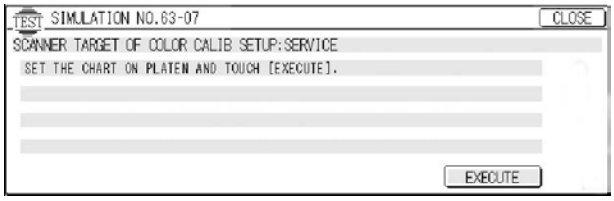

6) Press the REPEAT key, set the second color patch image paper, and perform procedure 5) again.

The color balance (gamma) target setup level of each color can be checked with K/C/M/Y keys.

The setup level values must be in the ascending sequence of B – O. If there is no change or the sequence is reversed, it is judged as an abnormality.

In case of an abnormality, resolve the problem and check again.

7) Press the OK key.

The color balance (gamma) corresponding to the color patch image (adjustment pattern) printed in the copy color balance adjustment (manual adjustment) (ADJ 11C) is set as the service target.

(Procedure to set the default (standard) color balance (gamma) as the service target)

* This procedure is executed only when the service target is found abnormal when the service target gamma is selected with SIM46-24 and the automatic color balance adjustment is executed, and when the user color calibration is executed.
* When the ICU EEPROM data are destroyed by U2 trouble.

When SIM 63-8 is executed, the service target gamma data are changed to the default target gamma data determined by the machine design.

When the color balance adjustment (Auto) is executed with the service target gamma data set to the default target gamma, a virtually satisfactory result will be obtained.

1) Enter the SIM 63-8 mode.

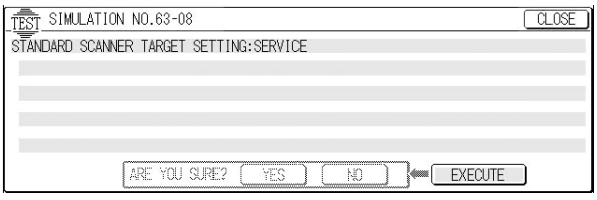

2) Press the [EXECUTE] key.

3) Press the YES key.

The service target becomes the same as the default (standard) target.

ADJ 11D Copy density adjustment in low-density area (Normally unnecessary to adjust.)

NOTE for SIM 46-1 and 46-2:

The major purpose of these simulations is to delete background copy simply.

SIM 46-1 and 46-2 are used to adjust the copy density in the low-density area, and they do not affect the density in the high-density area.

Note that the tone and the color phase may be changed greatly if the set value is changed greatly.

When an extreme background copy is produced, use ADJ 11C color balance adjustment (manual adjustment) (SIM 46-21) instead of this procedure.

The adjustment result of SIM 46-1 is reflected evenly to all the color copy modes.

The adjustment result of SIM 46-2 is reflected evenly to all the monochrome copy modes.

1) Enter the SIM 46-1 or 46-2 mode.

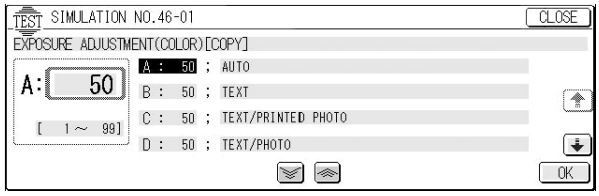

2) Select the copy mode to be adjusted with the scroll key.

3) Enter the adjustment value with the 10-key, and press the [OK] key.

To increase the density in the low-density area, set a greater adjustment value. To reduce the density, set a lower adjustment value. The adjustment in the low-density area can be adjusted individually for each copy mode.

The greater the set value is, the greater the density in the low-density area is, and vice versa. (The density in the high-density area is not changed.)

4) Cancel the simulation mode, and make a copy in the normal mode to check the copy density in the white area and the low-density area by using the test chart (UKOG-0283FCZZ).

In this simulation mode, press CLOSE key to jump to the normal copy mode and make actual copies of the service chart and user documents. In this manner, the adjustment result can be checked.

The adjustment can be performed also by switching between the simulation mode and the normal copy mode alternately and checking the adjustment result with actual copies.

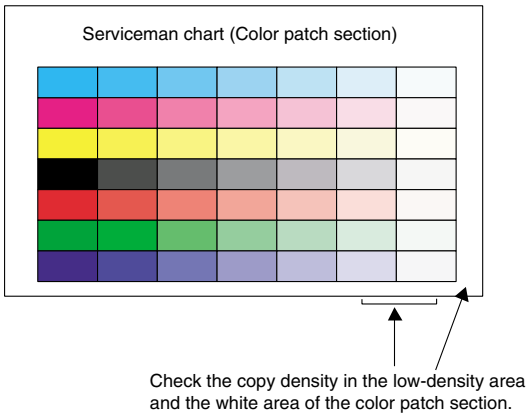

ADJ 11E Copy color balance density adjustment (each copy mode)

This adjustment must be performed in the following cases:

* When a U2 trouble occurs.
* When the MFP PWB is replaced.
* When the EEPROM of the MFP PWB is replaced.

Used to adjust the gamma and the density in each copy mode individually. The adjustment in each copy mode is not required normally, but is performed when the user requests it.

1) Enter either of SIM 46-10 to 46-16 modes.
   (Select the simulation according to the copy mode to be adjusted.)

Copy mode					Adjustment (Simulation)					
					Color balance/ density adjustment of each copy mode		Collective color balance/density adjustment of all copy modes		Low-density area color balance/ density adjustment	
					Main	Sub	Main	Sub	Main	Sub
Full color	AUTO		Auto (Auto document kind recognition, auto exposure)	Text	46	11	46	21/20/24	46	1
				Text/printed photo		12				
				Printed photo		12				
				Photograph		13				
				Text/Photograph		14				
	TEXT	NORMAL	Text	Normal		11				
		COLOR TONE ENHANCEMENT		Color emphasis						
		COPT TO COPY		Copy document		10				
	MAP	NORMAL	Map	Normal		11				
		COLOR TONE ENHANCEMENT		Color emphasis						
	PRINTED PHOTO	NORMAL	Printed photo	Normal		12				
		COLOR TONE ENHANCEMENT		Color emphasis						
		COPT TO COPY		Copy document		10				
	TEXT/PRINTED PHOTO	NORMAL	Text/printed photo	Normal		12				
		COLOR TONE ENHANCEMENT		Color emphasis						
		COPT TO COPY		Copy document		10				
	PHOTOGRAPH	NORMAL	Photograph	Normal		13				
		COLOR TONE ENHANCEMENT		Color emphasis						
	TEXT/PHOTO	NORMAL	Text/Photograph	Normal		14				
		COLOR TONE ENHANCEMENT		Color emphasis						
Single color (Affected by the adjustment result of full color mode)	TEXT	NORMAL	Text	Normal		25/(26)				
		COPT TO COPY		Copy document						
	MAP	NORMAL	Map	Normal						
	PRINTED PHOTO	NORMAL	Printed photo	Normal						
		COPT TO COPY		Copy document						
	TEXT/PRINTED PHOTO	NORMAL	Text/printed photo	Normal						
		COPT TO COPY		Copy document						
	PHOTOGRAPH	NORMAL	Photograph	Normal						
	TEXT/PHOTO	NORMAL	Text/Photograph	Normal						
Monochrome	AUTO1 (* 1)		Auto 1 (Japan)			15/(16)				2
	AUTO2 (* 1)		Auto 2 (Except Japan)							
	TEXT	NORMAL	Text	Normal						
		COPT TO COPY		Copy document						
	MAP		Map							
	PRINTED PHOTO	NORMAL	Printed photo	Normal						
		COPT TO COPY		Copy document						
	TEXT/PRINTED PHOTO	NORMAL	Text/printed photo	Normal						
		COPT TO COPY		Copy document						
	PHOTOGRAPH		Photograph							
	TEXT/PHOTO		Text/Photograph							

* The copy color balance and the density in the color enhancement mode are automatically determined by the adjustment result of the color normal mode. The adjustment unique to this mode cannot be made.

*1: Select either one. The default setting differs depending on the destination.

2) Select the color to be adjusted with the color select key, and select the adjustment point with the scroll key.

3) Enter the adjustment value with the 10-key, and press the OK key.

   The adjustment value can be selected in the range of 245 to 755. When the automatic color balance and the density are adjusted with SIM 46-24, all the set values of this simulation are set to 500.

   To increase the density, increase the adjustment value. To decrease the density, decrease the adjustment value.

ADJ 11F CCD gamma adjustment (CCD calibration) (Copy document copy mode)

This adjustment is the CCD gamma adjustment (CCD calibration) for the copy document copy mode, and is different from the CCD gamma adjustment (CCD calibration) in the normal document copy mode (ADJ 11A). There are above two kinds of the CCD gamma adjustment (CCD calibration), and both adjustments are required.

This adjustment is required in the following cases:

- After execution of the CCD gamma adjustment (CCD calibration) (normal document copy mode) (ADJ11A) and when the copy color balance is customized with SIM46-21.

(1) Note before adjustment

* Check that the table glass, No. 1/2/3 mirrors, and the lens surface are free from dirt and dust.
  (If dirt or dust is found, clean with alcohol.)
* Check that the patches of BK1 and BK2 of the SIT chart (UKOG-0280 FCZZ are free from dirt or dust.
  If dirt or dust is found, clean with alcohol.
  If any damage is found, replace with a new one.
* Since this adjustment is based on the normal document copy mode CCD gamma adjustment (CCD calibration) (ADJ 11A), the said adjustment must have been completed before execution of this adjustment.
  The copy color balance must also have been adjusted properly.

(2) Adjustment procedure

1) Place the SIT chart (UKOG-0280FCZZ) on the left edge of the document table, and fit the center of the SIT chart with the center of the glass holder.

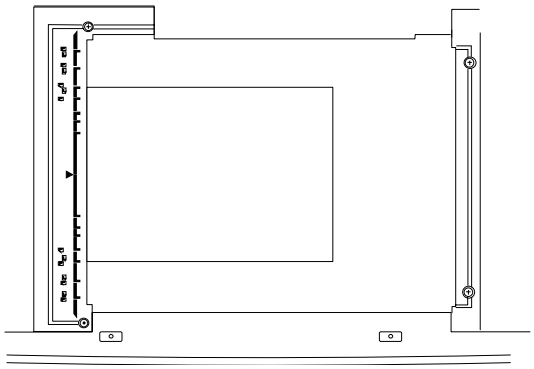

Note: Check that the SIT chart (UKOG-0280FCZZ) is in close contact with the document table.

2) Close the document cover without shifting the SIT chart (UKOG-0280FCZZ).
3) Make a copy in the Manual Photo mode.
   (Be sure to use the specified copy paper.)
4) Set the copy made in procedure 3) on the document table so that the center of the copy paper comes to the center of the left edge of the document table.

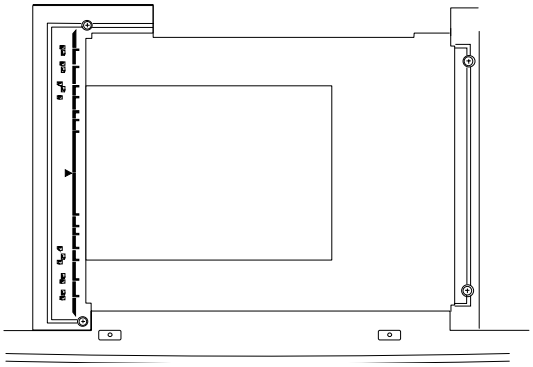

5) Enter the SIM 63-09 mode and press the [EXECUTE] key.

The automatic adjustment is performed. During the adjustment, the [EXECUTE] key is highlighted. When the adjustment is completed, the [EXECUTE] key returns to the normal display.

6) Cancel the simulation mode.

Note: The SIT chart (UKOG-0280FCZZ) is affected by lights (especially ultra-violet rays) and temperature and humidity. Store it in a clear file (nylon file) in a dark place.

ADJ 11G Image edge section gamma/density adjustment (Black text and black line reproduction adjustment) (Normally unnecessary to adjust.)

The gamma or density of black toner component images is changed to adjust the reproduction of the profile of the black character and line optionally. Especially the thickness of fine black character and line is changed.

Since the black toner component image quantity differs depending on each copy mode, be careful to selection of the copy mode when checking the result of this adjustment. Check in the Text/Printed photo copy mode.

This adjustment is valid only in the Text mode, the Text/Printed photo mode, and the Text/Photograph mode.

When the adjustment value different from the default value is used, this adjustment must be performed in the following cases:

- When U2 trouble occurs.
- When the MFP PWB is replaced.
- When the EEPROM of the MFP PWB is replaced.

1) Enter the SIM 46-27 mode.

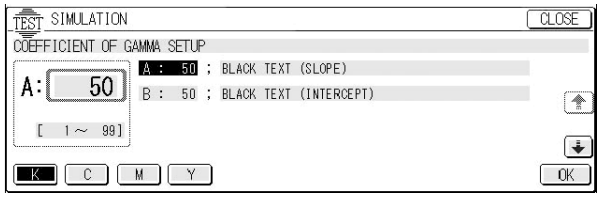

2) Enter the adjustment value with the 10-key.

BLACK TEXT (SLOPE): Black image edge section gamma (tilt) adjustment (Black text and black line reproduction adjustment)

When the adjustment value is increased, the black toner component image contrast becomes greater, and vice versa.

BLACK TEXT (INTERCEPT): Black image edge section density (overall level) adjustment (Black txt and black line reproduction adjustment)

The greater the adjustment value is, the greater the density is, and vice versa.

Normally set to the default (50).

3) Press the [OK] key.
4) Cancel the simulation, and make a copy in the Text/Printed Photo mode to check the reproduction of fine black character and line.
Use a document with black characters and lines on it for checking.

ADJ 11H Copy color balance adjustment (Single color Copy mode) (Normally unnecessary to adjust.)

This adjustment is used to adjust color balance and the density according to the user's demand.

The adjustment is made by setting the max. density level of Y, M and C in each color.

This adjustment is required in the following cases when the default was changed:

- When a consumable part (developer, photoconductor drum, transfer belt) is replaced.
- When the CCD unit is replaced.
- When the scanner (reading) section is cleaned.
- When U2 trouble occurs.
- When the MFP PWB is replaced.
- When the EEPROM of the MFP PWB is replaced.

a. Note for the adjustment

* This adjustment is not required in the normal state, but executed only when the user requests for.

b. Adjustment procedure

1) Enter the SIM 46-25 mode.

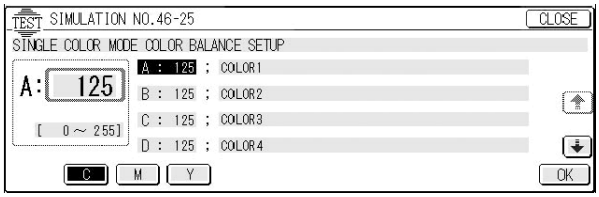

2) Select the color to be adjusted with the scroll key.
3) Select the color with the color key.
4) Enter the adjustment value of each toner color with the 10-key. (Default)

Display		Content	Min value	Max value	Default value		
					C	M	Y
A	COLOR1	RED	0	255	0	255	255
B	COLOR2	GREEN	0	255	255	0	255
C	COLOR3	BLUE	0	255	255	255	0
D	COLOR4	YELLOW	0	255	255	0	0
E	COLOR5	MAGENTA	0	255	0	255	0
F	COLOR6	CYAN	0	255	0	0	255

5) Cancel the simulation mode and make a copy in the single color copy mode to check.

ADJ 11I Auto color balance adjustment by user (Copy color balance auto adjustment enable setting and adjustment)

a. Outline

The user can perform the copy color balance and auto density adjustment in the user program mode.

SIIM 26-53 is used to Enable or Disable this operation.

Note: This setup is performed only when the user understands the copy color balance and the auto density adjustment and is capable of performing the operation.
Full explanations on the operating procedure, notes, and operations must be given to the user.

This setting is required in the following cases:

* When a U2 trouble occurs.
* When the PCU main PWB is replaced.
* When the EEPROM on the PCU main PWB is replaced.

b. Setup procedure

1) Enter the SIM 26-53 mode.

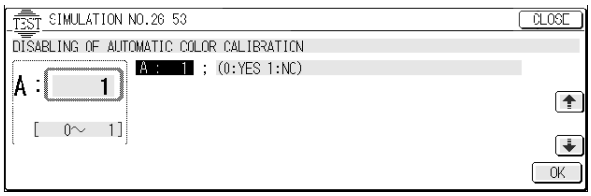

2) Select Enable/Disable with the 10-key.
Disabling = 0: YES
Enabling = 1: NO
3) Press the OK key.
When "0: YES" (Disabling) is selected, the user auto color calibration (copy color balance, auto density adjustment) menu is not displayed in the user program mode.

(Auto color calibration by the user (Auto color balance adjustment))

Note: This adjustment is based on the service target color balance set with SIM 63-7 or 63-8. If, therefore, the above simulation is not completed normally, this adjustment will not be completed normally.

1) Enter the user program mode.
2) Enter the copy mode.
3) Press the auto color calibration key.

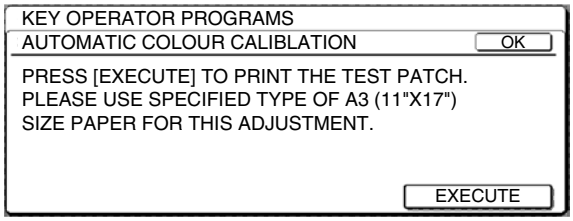

4) Press the [EXECUTE] key.

The color patch image (adjustment pattern) is printed.

5) Set the color patch image (adjustment pattern) printed in procedure 4) on the original table so that the darker density side comes to the left side. Place 5 sheets of white paper on the color patch image (adjustment pattern) paper.

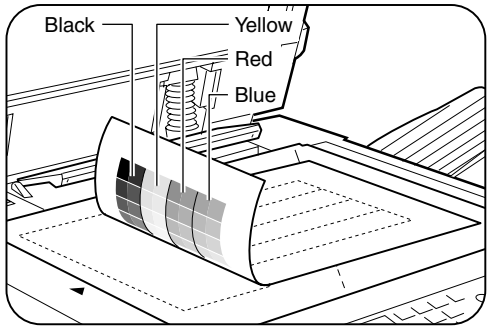

6) Press the [EXECUTE] key. The copy color balance adjustment (step 2) is automatically performed. After completion of the adjustment, the display returns to the original menu.

ADJ 11J Background process conditions setting in the color auto copy mode, image auto recognition conditions setting, text-on-dot recognition conditions setting

This adjustment is required in the following cases when the default was changed:

- When U2 trouble occurs.
- When the MFP PWB is replaced.
- When the EEPROM of the MFP PWB is replaced.
- When a request is made by the user.

(Foundation removal operation condition setting)

This adjustment is valid only in the color auto copy mode (Text, Text/Printed photo, Text/Photograph, Printed photo, Photograph).

1) Enter the SIM 46-33 mode.
2) Select the COLOR AE mode.
3) Select the setting mode with the scroll key.
   A: Foundation process judgment level setting (Judged by the ratio of printed photo in the document (ratio of dotted area).)
   B: Foundation process judgment level setting (Judged by the document foundation color phase.)
   C: Foundation removal quantity setting
4) Enter the set value with the 10-key and press the OK key to set the entered value.

(Relationship between the set value and foundation removal operation)

Display	Set value (Display)		Ratio of printed photo in the document (Ratio of dot areas)			
			None or little	Little – Medium	Medium – Much	Very much
A	0	LOW	NO	NO	NO	NO
	1	RATHER LOW	YES	NO	NO	NO
	2 (Default)	MIDDLE	YES	YES	NO	NO
	3	RATHER HIGHT	YES	YES	YES	NO
	4	HIGHT	YES	YES	YES	YES

Display	Set value (Display)		Color phase in the document			
			None or Weak	Weak – Medium	Medium – Strong	Very strong
B	0	LOW	NO	NO	NO	NO
	1	RATHER LOW	YES	NO	NO	NO
	2 (Default)	MIDDLE	YES	YES	NO	NO
	3	RATHER HIGHT	YES	YES	YES	NO
	4	HIGHT	YES	YES	YES	YES

YES: Foundation removal is performed.
NO: Foundation removal is not performed.

(Foundation removal quantity setting)

Display		Set value (Display)	Foundation removal quantity
C	−4	0	Little
	−3	1	↑
	−2	2	
	−1	3	
	0	4 (Default)	
	+1	5	
	+2	6	
	+3	7	↓
	+4	8	Much

Whether the foundation removal is performed or not is determined by the AND condition of the set items A and B.

(Image auto recognition condition setting)

Used to set whether the text area is regarded important or not in judgment of printed photo and the text/printed photo or photograph and text/photograph.

1) Select the ORG RECOG mode.
2) Enter the set value with the 10-key and press the [OK] key to set the entered value.

Display	Set value			Content
A	TEXT PRIORITY MODE	0	DISABLE	There must be considerable level of text area to judge as text/printed photo or text/photograph.
		1 (Default)	ENABLE	Only a light level of text area is enough for judging as text/printed photo or text/photograph.

(Text-on-dots recognition condition setting)

Used to set whether the text on dots is recognized as text or not.

1) Select the SEG mode.
2) Select the set mode A with the scroll key.
3) Enter the set value with the 10-key and press the [OK] key to set the entered value.

Display	Set value		Content
A	0 (Default)	OFF	Text on dots is not recognized as text.
	1	ENABLE	Text on dots is recognized as text. (Priority is placed on the reproduction of text.)

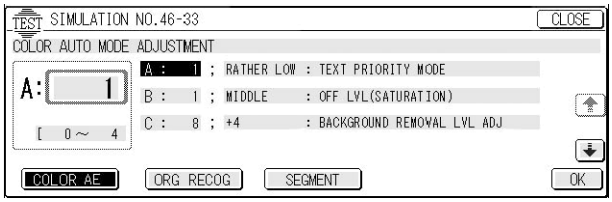

(Setting the reproduction (text recognition level) of text on dots of a document printed by the printer)

This function is effective especially when copying a document that is printed by an inkjet printer or a laser printer in the automatic color copy mode.

Some inkjet printers and laser printers express gradations with the thickness of lines. In that case, line images may be erroneously recognized as text images.

When recognized as text images, the area is printed with sharp edges and high contrast, losing gradations. In addition, dirt may appear on the print.

To cope with this problem, the text (edge) recognition level can be adjusted.

1) Select the SEG mode.
2) Select the setting mode B with the scroll key,
3) Enter the set value with the 10-key and press the [OK] key to set the entered value.

Display	Set value		Content
B	0 (Default)	OFF	Normal mode (Normal text recognition level) Depending on the type of documents, text images may be with sharp edges and high contrast.
	1	ON	Mode for documents printed by a printer: Documents are copied in a similar picture quality. (Low text recognition level)

ADJ 12 Fusing pressure adjustment

This adjustment must be performed in the following cases:

- When the fusing section is disassembled.
- When a fusing trouble occurs.
- When wrinkles are generated on paper in the fusing section.

1) Select A4 (8.5 x 11) paper.
2) With the document cover open, press the start key of monochrome copy.
3) A copy of black background is made.
4) Open the left door.
5) Insert paper into the pre-transfer paper guide, and turn the fusing roller knob.

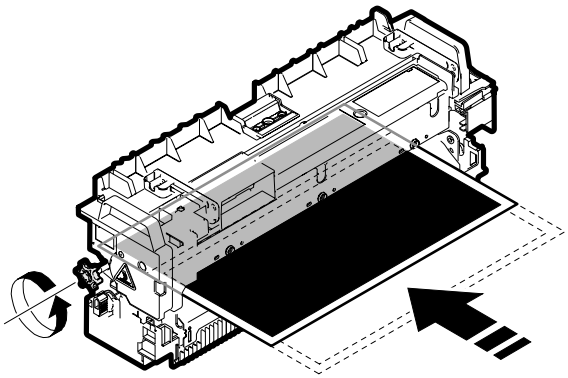

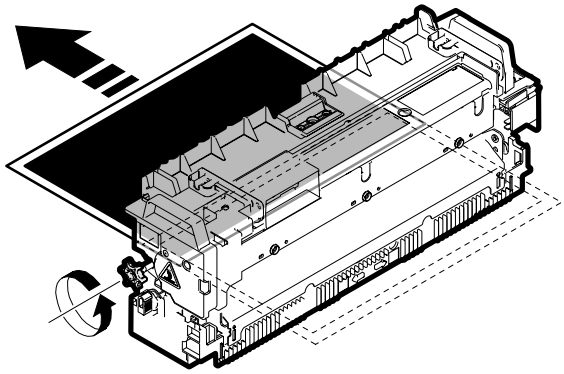

6) With the paper squeezed in the pre-transfer paper guide, wait for about 10sec.
7) Turn the fusing roller knob to remove the paper from the fusing section.
8) Measure the dimension (L) of the center section of the glittering line made by the fusing roller. Check that the dimension is in the specified range.

   Check that the pressure balance between the front and the rear frame sides is proper.

Value L = About 5.5mm

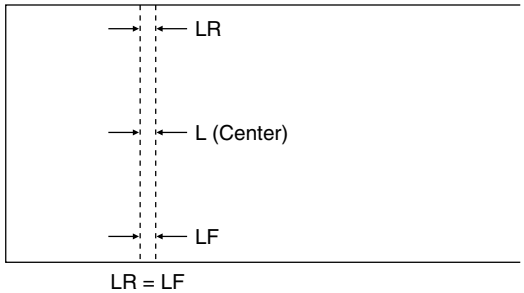

LR = LF

If the above conditions are not satisfied, perform the following procedure.

9) Turn the pressure adjustment screw on the front and the rear frame sides of the fusing unit to adjust the fusing pressure.

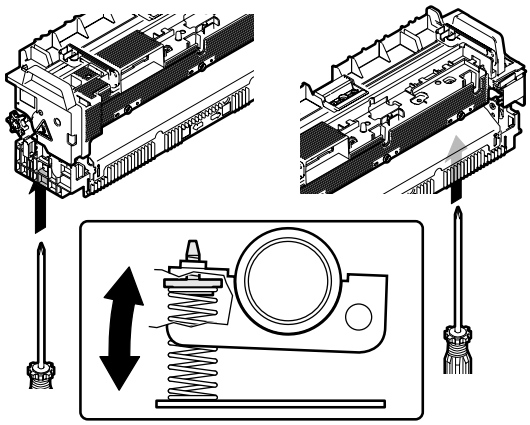

Repeat procedures 2) to 9) until the condition of procedure 8) is satisfied.

ADJ 13 Fusing paper guide position adjustment

This adjustment must be performed in the following cases:

- When the fusing section is disassembled.
- When a paper jam occurs in the fusing section.
- When wrinkles are generated on paper in the fusing section.
- When image deflection or unclear image is produced in the paper rear edge area.

The standard fixing position is at the center. However, change the position depending on the situations.

- When wrinkles are made on paper, shift the position upward.
- When image deflection or unclear image is produced in the paper rear edge area, shift the position downward.

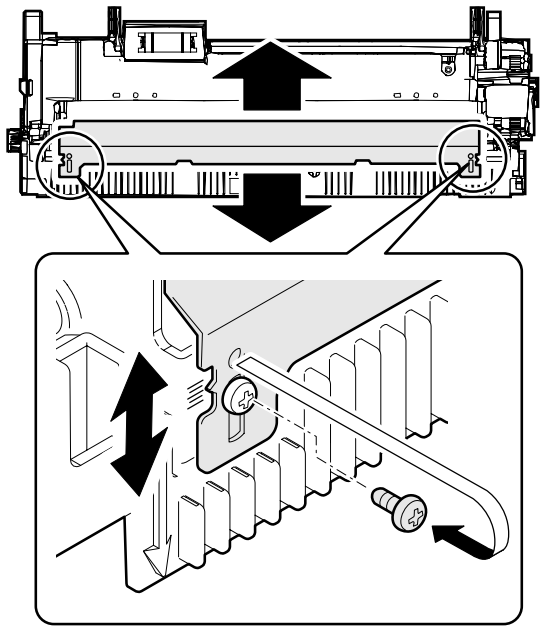

ADJ 14 Document size sensor adjustment

This adjustment must be performed in the following cases:

- When the original size sensor section is disassembled.
- When the original size sensor section is replaced.
- When a U2 trouble occurs.
- When the PCU main PWB is replaced.
- When the EEPROM of the PCU main PWB is replaced.

ADJ 14A Original size sensor detection point adjustment

1) Enter the SIM 41-1 mode.

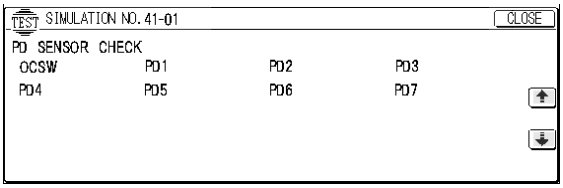

Gradually tilt the original detection arm unit. Loosen the original cover switch actuator adjustment screw so that the highlight display of OCSW is turned to the normal display when the height of the arm unit top from the table glass is 32 ± 0.5mm. Slide the actuator to adjust. (If the ON timing of the original cover switch is shifted, the original detection function may malfunction.)

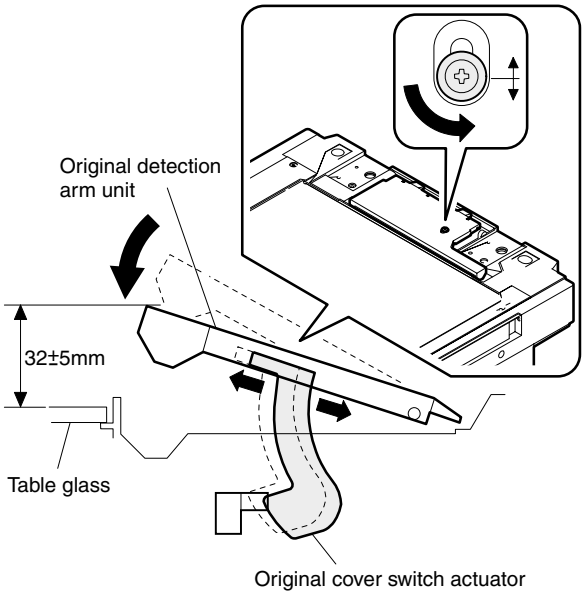

ADJ 14B Original size sensor sensitivity adjustment

1) Enter the SIM 41-2 mode.

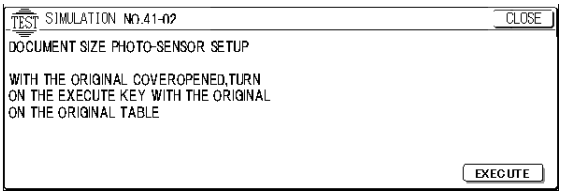

2) Make the sensor adjustment without an original.
   With the original cover open and without an original on the original table, press the [EXECUTE] key.
3) Place A3 (11 x 17) document on the document table and press the [EXECUTE] key.

ADJ 15 Manual paper feed tray paper size sensor adjustment

This adjustment must be performed in the following cases:

- When the manual paper feed tray section is disassembled.
- When the manual paper feed tray unit is replaced.
- When a U2 trouble occurs.
- When the PCU PWB is replaced.
- When the EEPROM of the PCU PWB is replaced.

1) Enter the SIM 40-2 mode.

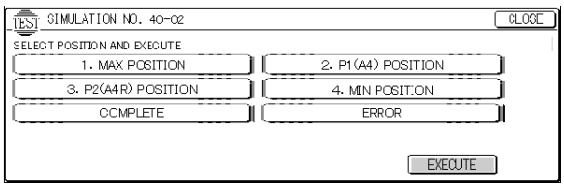

2) Set the manual paper feed guide to the maximum position.

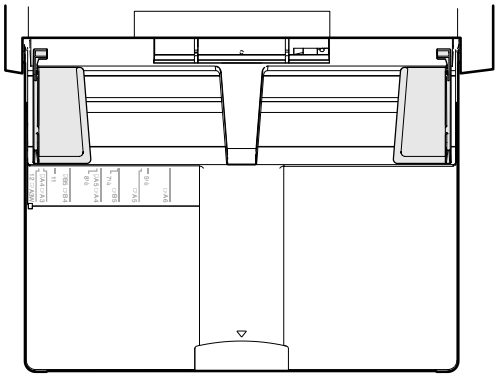

3) Press the [EXECUTE] key.
   The [EXECUTE] key is highlighted. Then it returns to the normal display. The manual paper feed guide maximum width position detection level is recognized.
4) Set the manual paper feed guide to A4 (11 x 8.5") size width.
5) Press the [EXECUTE] key.
   The [EXECUTE] key is highlighted. Then it returns to the normal display. The manual paper feed guide A4 (11 x 8.5") width position detection level is recognized.
6) Set the manual paper feed guide to A4R (11 x 8.5"R) size width.
7) Press the [EXECUTE] key.
   The [EXECUTE] key is highlighted. Then it returns to the normal display. The manual paper feed guide A4R (11 x 8.5" R) width position detection level is recognized.
8) Set the manual paper feed guide to the minimum position.

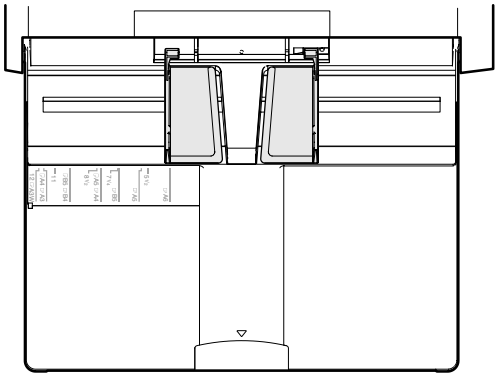

9) Press the [EXECUTE] key.

The [EXECUTE] key is highlighted. Then it returns to the normal display. The manual paper feed guide minimum width position detection level is recognized.

If the above procedure is not completed normally, "ERROR" is highlighted. If the above procedure is completed normally, the above data are stored and "COMPLETE" is highlighted.

ADJ 16 Touch panel coordinates setting

This adjustment must be performed in the following cases:

- When the operation panel is replaced.
- When a U2 trouble occurs.
- When the MFP PWB is replaced.
- When the EEPROM of the MFP PWB is replaced.

1) Enter the SIM 65-1 mode.

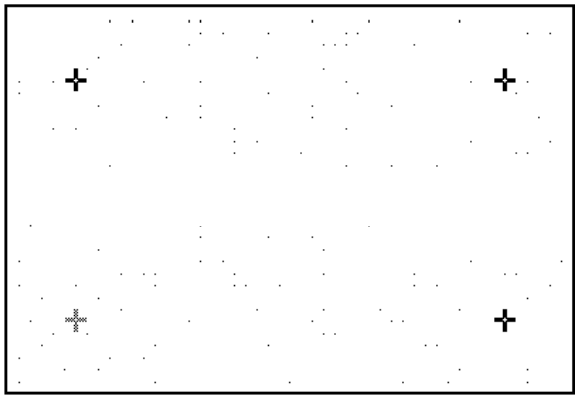

2) Touch the four cross marks on the display.

When the cross marks are pressed, the buzzer sounds and they are changed into gray display. When the touch panel adjustment is completed by pressing all the four marks, the display returns to the simulation sub code number entry menu.

If there is any abnormality, the first display is shown again.

* When touching the crosses, never use a needle or a pin with a sharp point.

ADJ 17 Power voltage adjustment

This adjustment must be performed in the following cases:

- When a part in the DC power unit is replaced.

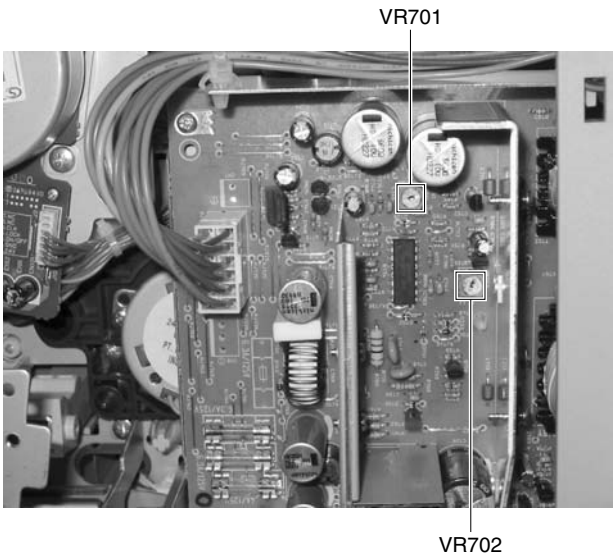

ADJ 17A 3.4 V power voltage adjustment

1) Put the multi-meter on the 3.4V line of the DC main PWB and GND.
2) Turn VR701 on the DC main PWB to adjust so that the voltage is 3.4V.

ADJ 17B 5.0 V power voltage adjustment

1) Put the multi-meter on the 5.0V line of the DC main PWB and GND.
2) Turn VR702 on the DC main PWB to adjust so that the voltage is 5.0V.

ADJ 18 FAX/scanner mode image loss adjustment

1) Enter the SIM 40-2 mode.

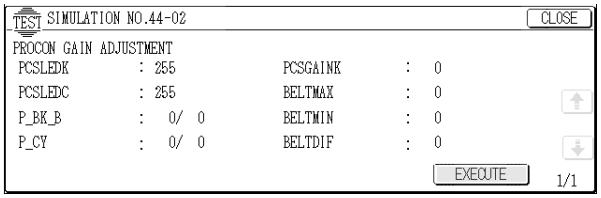

2) Select the adjustment mode with the scroll key.

Content	Adjustment range	Default value
FAX mode image loss	0 to 99	20
Scanner modes (all except for the copy mode) image loss	0 to 99	40

3) Enter the adjustment value at the selected point with the 10-key and press the OK key to set the entered adjustment value.

When the adjustment value is changed, the image losses at the four corners are changed uniformly.

[9] SIMULATION

(Diagnostics, setup, adjustment value input, data display)

1. Outline and purpose

The simulation has the following functions to grasp the machine operating status, identify the trouble position and causes in an earlier stage, and make various setups and adjustments speedily for improving the serviceability of the machine.

1) Various adjustments
2) Setup of specifications and functions
3) Canceling troubles
4) Operation check
5) Various counters check, setup, and clear
6) Machine operating status (operation history) data check, clear
7) Transfer of various data (adjustments, setup, operations, counters)

The operating procedures and the displays differ depending on the form of the operation panel of the machine.

2. Code-type simulation

A. Operating procedures and operations

* Entering the simulation mode

1) #/P key (program) ON → Asterisk (*) key ON → CLEAR key ON → Asterisk (*) key ON → Ready for input of a main code of simulation
2) Entering a main code with the 10-key → START key ON
3) Entering a sub code with the 10-key → START key ON
4) Select an item with the scroll key and the item key.
5) The machine enters the mode corresponding to the selected item.
   Press START key or EXECUTE key to start the simulation operation.
   To cancel the current simulation mode or to change the main code and the sub code, press the user setup key.

* Canceling the simulation mode to return to the normal mode

1) Press CLEAR ALL key.

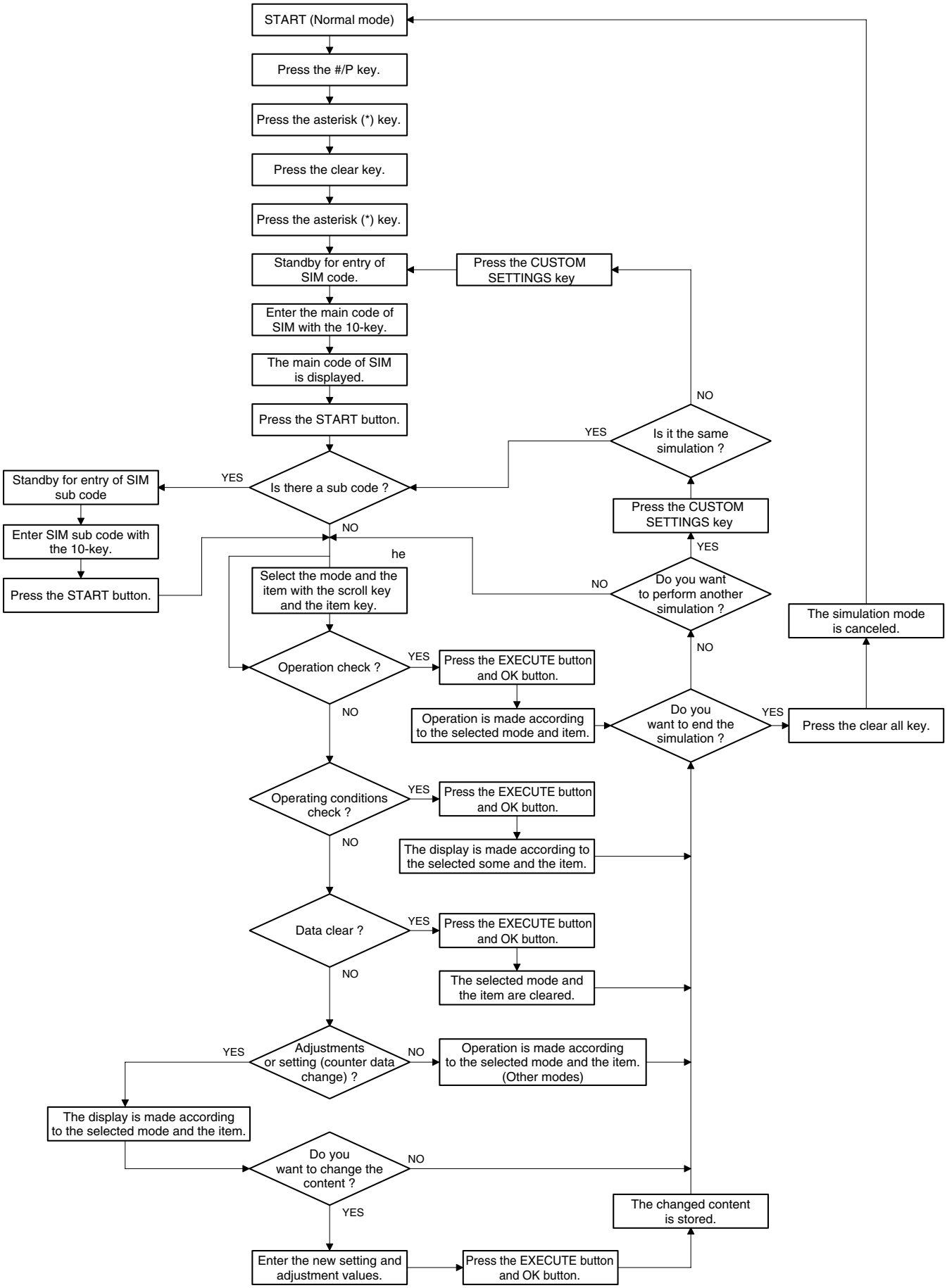
START (Normal mode)
Press the #/P key.
Press the asterisk (*) key.
Press the clear key.
Press the asterisk (*) key.
Standby for entry of SIM code.
Press the CUSTOM SETTINGS key
Enter the main code of SIM with the 10-key.
The main code of SIM is displayed.
Press the START button.
NO
YES
Is it the same simulation ?
YES
Is there a sub code ?
Standby for entry of SIM sub code
Enter SIM sub code with the 10-key.
Press the START button.
NO
Press the CUSTOM SETTINGS key
YES
he
Select the mode and the item with the scroll key and the item key.
NO
Do you want to perform another simulation ?
The simulation mode is canceled.
NO
Operation check ?
YES
Press the EXECUTE button and OK button.
NO
Operation is made according to the selected mode and item.
Do you want to end the simulation ?
YES
Press the clear all key.
Operating conditions check ?
YES
Press the EXECUTE button and OK button.
NO
The display is made according to the selected some and the item.
Data clear ?
YES
Press the EXECUTE button and OK button.
NO
The selected mode and the item are cleared.
YES
Adjustments or setting (counter data change) ?
NO
Operation is made according to the selected mode and the item. (Other modes)
The display is made according to the selected mode and the item.
Do you want to change the content ?
NO
YES
The changed content is stored.
Enter the new setting and adjustment values.
Press the EXECUTE button and OK button.

B. Simulation list

(1) Main/ Sub

Code		Function (Purpose)	Purpose	Section		Item	
Main	Sub						
1	1	Used to check the operations of the scanner unit and its control circuit.	Operation test/check	Scanner (Image scanning)		Operation	
	2	Used to check the sensors and detectors in the scanner section and the related circuits.	Operation test/check	Scanner (Image scanning)		Operation	
	5	Used to check the scanner (scanning) unit and its control circuit.	Operation test/check	Scanner (Image scanning)		Operation	
2	1	Used to check the operations of the RADF unit and the control circuit. (The document feed operation is repeatedly performed.)	Operation test/check	RADF		Operation	
	2	Used to check the operations of the sensors and detectors in the RADF unit and the related circuits.	Operation test/check	RADF		Operation	
	3	Used to check the operations of the loads in the RADF unit and the control circuits.	Operation test/check	RADF		Operation	
3	2	Used to check the operations of the sensors and detectors in the finisher and the related circuits.	Operation test/check	Finisher		Operation	
	3	Used to check the loads in the finisher and the control circuit.	Operation test/check	Finisher		Operation	
	10	Used to adjust the sections in the finisher.	Operation test/check	Finisher		Operation	
4	2	Used to check the operations of the desk/large capacity tray sensors and detectors and the related circuits.	Operation test/check	Paper feed		Operation	
	3	Used to check the operations of the desk/large capacity tray loads and the control circuit.	Operation test/check	Paper feed		Operation	
	5	Used to check the operations of the clutch TRC and the monitor.	Operation test/check	Paper feed		Operation	
5	1	Used to check the operations of the display lamp (LED)/LCD on the operation panel and the control circuits.	Operation test/check	Operation (Display, procedure)		Operation	
	2	Used to check the operations of the heater lamp and its control circuit.	Operation test/check	Fusing		Operation	
	3	Used to check the operations of the scanner lamp and its control circuit.	Operation test/check	Scanner (reading)		Operation	
	4	Used to check the operations of the discharge lamp and its control circuit.	Operation test/check	Process (Photoconductor, developing, transfer, cleaning)	Others	Operation	
6	1	Used to check the operations of the loads (clutches and solenoids) in the paper transport system, transfer, and fusing, and the control circuit.	Operation test/check	Paper transport (paper exit, switchback, transport), transfer, fusing		Operation	
	2	Used to check the operations of the fan motors and the control circuits.	Operation test/check	Others		Operation	
7	1	Used to set the aging conditions.	Setting/Operation test/check			Operation	
	6	Used to set the cycle of intermittent aging.	Setting/Operation test/check			Operation	
	8	Used to set Yes/No of warm-up time display.	Setting/Operation test/check			Operation	

Code		Function (Purpose)	Purpose	Section		Item	
Main	Sub						
7	9	Used to check the image quality and operations of each color.	Operation test/check	Others		Picture quality	
8	1	Used to check and adjust the operations of the developing bias voltage of each color and the control circuit.	Adjustment/ Operation test/check	Process (Photoconductor, developing, transfer, cleaning)			
	2	Used to check and adjust the operation of each print mode main charger grid voltage and the control circuit.	Adjustment/ Operation test/check	Process (Photoconductor, developing, transfer, cleaning)			
	6	Used to check and adjust the operation of the transfer charger current and the control circuit.	Adjustment/ Operation test/check	Process (Photoconductor, developing, transfer, cleaning)		Transfer	
9	2	Used to check the operation of the sensors and detectors in the inverter/duplex section and the control circuit.	Operation test/check	Inverter/Duplex		Operation	
	3	Used to check the operations of the loads (motor, clutch, solenoid) in the inverter/duplex section and the control circuits.	Operation test/check	Inverter/Duplex		Operation	
14	0	Used to cancel self diag troubles H3, H4, and H5. Inhibition of the color copy mode operation is canceled.	Clear/cancel (Trouble etc.)			Trouble	Error
15	0	Self diag U6-09 (large capacity paper feed tray) trouble cancel	Clear/cancel (Trouble etc.)	Paper feed		Trouble	
16	0	Used to cancel self diag trouble U2.	Clear/cancel (Trouble etc.)			Trouble	Error
17	0	Used to cancel self diag troubles PF (copy inhibition command from the host computer).	Clear/cancel (Trouble etc.)	Communication (RIC/ MODEM)		Trouble	Error
21	1	Used to set the maintenance cycle.	Setting			Specifications	Counter
22	1	Used to check the print count value in each section and each operation mode. (Used to check the maintenance timing.)	Adjustment/Setting/ Operation data output, check (display, print)			Counter	
	2	Used to check the total misfeed count and the total trouble count. (If the misfeed count is considerably great, it may be judged as necessary to repair. By dividing this count by the total count, the misfeed rate can be obtained.)	Adjustment/Setting/ Operation data output, check (display, print)			Trouble	
	3	Used to check misfeed positions and the misfeed count of each position. (If the misfeed count is considerably great, it may be judged as necessary to repair.) (Machine section only)	Adjustment/Setting/ Operation data output, check (display, print)			Trouble	Misfeed
	4	Used to check the total trouble (self diag) history.	Adjustment/Setting/ Operation data output, check (display, print)			Trouble	
	5	Used to check the ROM version of each unit (section).	Others			Software	
	6	Used to print the setting and adjustment data list.	Adjustment/Setting/ Operation data output, check (display, print)			Data	Setting/ Adjustment data
	7	Used to display the key operator code. (Used when the customer forgets the key operator code.)	User data output/ Check (Display/ Print)			Data	User data

Code		Function (Purpose)	Purpose	Section		Item	
Main	Sub						
22	8	Used to check the number of uses of the staple, and the RADF.	Adjustment/Setting/ Operation data output, check (display, print)			Counter	
	9	Used to check the number of uses (print quantity) of each paper feed section.	Adjustment/Setting/ Operation data output, check (display, print)	Paper feed		Counter	
	10	Used to check the system configuration (option, internal hardware).	Adjustment/Setting/ Operation data output, check (display, print)			Specifications	Option
	12	Used to check the misfeed positions and the number (history) of misfeed at each position. (If the misfeed count is considerably great, it may be judged as necessary to repair.)	Adjustment/Setting/ Operation data output, check (display, print)	RADF		Trouble	Misfeed
	13	Used to check the process cartridge counter. (If the count number is considerably great, it may be judged as necessary for repair.)	Adjustment/Setting/ Operation data output, check (display, print)	Process section		Counter	
	19	Used to check the counters related to the network scanner.	Adjustment/Setting/ Operation data output, check (display, print)	Network scanner		Counter	
24	1	Used to clear the misfeed counter, the misfeed history, the trouble counter, and the trouble history. (After completion of maintenance, the counters are cleared.)	Data clear	Memory		Counter	
	2	Used to clear the data of the number of uses (print quantity) of each paper feed section.	Data clear	Paper feed		Counter	Paper feed unit
	3	Used to clear the use number data of the staple, the RADF, and the scanner.	Data clear	Transport/Finisher		Counter	
	4	Used to reset the maintenance counter.	Data clear			Counter	Maintenance
	6	Used to clear the counters.	Data clear			Counter	
	7	Used to clear the OPC drum (membrane decrease) correction counter. (This simulation is performed with the OPC drum is replaced.)	Data clear	Process (Photoconductor, developing, transfer, cleaning)	Photoconductor	Counter	Photoconductor
	8	Used to clear the waste toner counter in the transfer section.	Data clear	Process (Photoconductor, developing, transfer, cleaning)	Transfer	Counter	
	9	Used to clear the printer mode counter and the self-print mode print counter. (After completion of maintenance, the counters are cleared.)	Data clear	Printer		Counter	Printer
	15	Used to clear the network scanner counter.	Data clear	Scanner section		Counter	
25	1	Used to check the operation of the process section (excluding the image process section) and the toner remaining quantity sensor. (The toner remaining quantity sensor output can be monitored.)	Operation test/check	Process (Photoconductor, developing, transfer, cleaning)		Operation	

Code		Function (Purpose)	Purpose	Section		Item	
Main	Sub						
26	2	1. Used to set the paper size of the large capacity tray. (When the paper size is changed, the software setup must be changed accordingly with this simulation.) 2. Used to detect 8.5 " x 13" (INCH Series) paper or documents and to set the display mode. (All paper feed modes) 3. Used to set the display form of the paper kind in the manual paper feed mode.	Setting	Paper feed		Specifications	
	3	Used to set the auditor specification mode. Setting must be made according to the use conditions of the auditor.	Setting	Auditor		Specifications	
	5	Used to set the count mode of the total counter and the maintenance counter.	Setting			Specifications	Counter
	6	Used to set the destination specifications (paper, fixed copy magnification ratios, image (process) correction, machine operation in case of an error, etc.).	Setting			Specifications	Destination
	10	Used to set the trial mode of the network scanner.	Setting	Scanner		Specifications	
	18	Used to set YES/NO of toner save operation. (This simulation is Enable only for Japan and UK versions. It depends on SIM 26-6 (Destination) setting. For the other destinations, the same setting can be made by the user program P22. (Effective only in the monochrome copy mode)	Setting			Specifications	Operation mode (Common)
	35	Used to set whether the trouble history display by SIM 22-4 is displayed as one trouble or as the accumulated number of continuous troubles when two or more troubles of same kind occur continuously.	Setting			Specifications	
	38	Used to set "Continue/ Discontinue" of printing when toner life is reached.	Setting			Specifications	
	41	Used to set Enable/Disable of AMS operation in the center-binding mode.	Setting			Specifications	
	52	Used to set YES/NO of count up of non-copy paper (cover or insertion paper).	Setting			Specifications	Operation mode
	53	Used by the user to set Enable/ Disable auto color calibration (auto adjustment of color balance and density)	Setting			Specifications	Operation mode
	57	Used to set the model name for use as the status information.	Setting			Specifications	
	65	Used to set the finisher alarm mode.	Setting			Specifications	

Code		Function (Purpose)	Purpose	Section		Item	
Main	Sub						
27	1	Used to set the specifications for operations in case of communication trouble between the host computer and MODEM (machine side). (When communication trouble occurs between the host computer MODEM and the machine, the self diag display (U7-00) is printed and setting for inhibition of print or not is made.)	Operation test/check	Communication (RIC/ MODEM)		Specifications	Operation mode (Common)
	5	Used to enter the machine tag No. (This function allows to check the tag No. of the machine with the host computer.)	Setting	Communication (RIC/ MODEM)		Data	User data
	6	Used to set ON/OFF of service call sending to the service center by use of RIC when trouble occurred in the machine. (The service call is not sent automatically, but sent manually.)	Setting	Communication (RIC/ MODEM)		Specifications	Others
30	1	Used to check the operation of sensors and detectors in the paper feed, paper transport, paper exit sections and the related circuits.	Operation test/check			Operation	
	2	Used to check the operation of sensors and detectors in the paper feed section and the related circuits. (The operation of the paper feed sensors and detectors can be monitored with the LCD display.)	Operation test/check	Paper feed		Operation	
33	1	Used to check the operation of the card reader and the sensors and the related circuits. (The card reader sensor operation can be monitored with the LCD display.)	Operation test/check	Others		Operation	
40	1	Used to check the operation of the manual feed tray paper size detector and the related circuit. (The operation of the manual feed tray paper size detector can be monitored with the LCD display.)	Operation test/check	Paper feed		Operation	
	2	Used to adjust the manual feed tray paper width detector detection level.	Adjustment	Paper feed		Operation	
	7	Used to enter the adjustment value of the manual paper feed tray paper width detector detection level. (Setting)	Setting	Paper feed		Specifications	
41	1	Used to check the operation of the document size sensor and the related circuit. (The operation of the document size sensor can be monitored with the LCD display.)	Operation test/check	Others		Operation	
	2	Used to adjust the document size sensor detection level.	Adjustment	Others		Operation	

Code		Function (Purpose)	Purpose	Section		Item	
Main	Sub						
41	3	Used to check the operation of the document size sensor and the related circuit. (The document size sensor output level can be monitored with the LCD display.)	Operation test/check	Others		Operation	
43	1	Used to set the fusing temperature in each operation mode.	Setting	Fixing (Fusing)		Operation	
44	1	Used to set enable/disable of correction operations in the image forming (process) section.	Setting	Process (Photoconductor, developing, transfer, cleaning)		Operation	
	2	Black image density sensor adjustment	Adjustment			Operation	
	4	Image forming section correction, image density sensor adjustment conditions setup	Setting	Process (Photoconductor, development, transfer)		Picture quality	
	6	Used to forcibly execute the image forming section correction (high density process correction) (process correction).	Operation test/check	Process (Photoconductor, developing, transfer, cleaning)		Operation	
	9	Used to check the data related to the image forming section correction (the corrected main charger grid voltage in each print mode, the developing bias voltage, etc.). (Used to check that correction is performed normally or not.)	Adjustment/Setting/ Operation data output, check (display, print)	Process (Photoconductor, developing, transfer, cleaning)		Data	Operation data (Machine conditions)
	12	Used to check the sampling toner image patch density data in the image forming section correction (high-density correction) (process correction). This simulation allows to check if the correction operation is performed normally.)	Adjustment/Setting/ Operation data output, check (display, print)	Process (Photoconductor, developing, transfer, cleaning)		Data	Operation data (Machine conditions)
	13	Color image density sensor adjustment (Adjustment by the adjustment jig)	Adjustment	Process (Transfer)			
	14	Used to monitor the output level of the fusing temperature sensor, the machine temperature sensor, and the humidity sensor.	Adjustment/Setting/ Operation data output, check (display, print)	Others			
	21	Used to store color balance adjustment data. (Half tone image correction initial setting) (After execution of color balance adjustment with SIM 46-21, this simulation must be executed.)	Setting			Picture quality	
	22	Used to check each color toner patch image density UITU in half tone image forming section correction (process correction). (This simulation allows to check if correction operation is performed normally.)	Adjustment/Setting/ Operation data output, check (display, print)	Process (Photoconductor, developing, transfer, cleaning)		Data	Operation data (Machine conditions)

Code		Function (Purpose)	Purpose	Section		Item	
Main	Sub						
44	24	Used to check the half tone correction result. (This simulation allows to check if correction is executed properly or not.)	Adjustment/Setting/ Operation data output, check (display, print)	Process (Photoconductor, developing, transfer, cleaning)		Data	Operation data (Machine conditions)
	25	Setting the half tone correction conditions.	Adjustment/Setting/ Operation data output, check (display, print)	Process (Photoconductor, developing, transfer, cleaning)		Data	Operation data (Machine conditions)
	26	Used to execute half tone correction compulsorily.	Adjustment	Process (Photoconductor, developing, transfer, cleaning)		Picture quality	
	27	Used to clear the half tone correction data and set to the default level.	Data clear	Process (Photoconductor, developing, transfer, cleaning)		Data	
	36	Color image density sensor and black image density sensor adjustment (simple adjustment)	Adjustment	Process (Transfer)			
46	1	Used to adjust the copy density of each color copy mode in the low-density area. The copy densities of all colors in the low-density areas are changed.	Adjustment	Process (Photoconductor, developing, transfer, cleaning)		Picture quality	Density
	2	Used to adjust the copy density of the low-density area in each monochrome copy mode. The copy density of the low-density area is changed.	Adjustment			Picture quality	Density
	4	Used to adjust the image density (color mode) in the network scan mode.	Adjustment	Scanner (reading)		Picture quality	Density
	5	Used to adjust the image density (monochrome mode) in the network scan mode.	Adjustment	Scanner (reading)		Picture quality	Density
	6	1) Used to set the CCD black level offset level. 2) Used to set the CCD white level gain.	Adjustment	Scanner (reading)		Picture quality	
	10	Used to adjust the copy color balance (color) (copy document mode) (gamma/density adjustment for each color)	Adjustment	Image process (ICU)		Picture quality	Color balance
	11	Used to adjust the copy color balance (color) (text mode/map mode) (gamma/density adjustment for each color)	Adjustment	Image process (ICU)		Picture quality	Color balance
	12	Used to adjust the copy color balance (color) (text/printed photo mode/Photograph mode) (gamma/density adjustment for each color)	Adjustment	Image process (ICU)		Picture quality	Color balance
	13	Used to adjust the copy color balance (color) (photograph mode) (gamma/density adjustment for each color)	Adjustment	Image process (ICU)		Picture quality	Color balance
	14	Used to adjust the copy color balance (color) (text/photograph mode) (gamma/density adjustment for each color)	Adjustment	Image process (ICU)		Picture quality	Color balance
	15	Used to adjust the gamma and density. (Monochrome mode)	Adjustment	Image process (ICU)		Picture quality	Density
	16	Used to adjust the gamma and density. (Monochrome mode) (The adjustment check pattern is printed.)	Adjustment	Image process (ICU)		Picture quality	Density

Code		Function (Purpose)	Purpose	Section		Item	
Main	Sub						
46	19	Used to select the half tone density (gamma) in the auto exposure mode and to set the auto exposure operation mode.	Adjustment	Image process (ICU)		Picture quality	Density
	20	Used to adjust copy color balance (All color copy mode gamma/density adjustment) (All color copy mode color balance/ gamma/density are changed.) Same as SIM 46-21, however, printing is not performed.	Adjustment	Image process (ICU)		Picture quality	Color balance
	21	Used to adjust copy color balance (All color copy mode gamma/density adjustment) (All color copy mode color balance/ gamma/density are changed.)	Adjustment	Image process (ICU)		Picture quality	Color balance
	23	Used to set Enable/Disable of half-tone high-density correction.	Adjustment			Picture quality	Color balance
	24	Used to adjust the copy color balance automatically. (All color copy mode gamma/density adjustment)	Adjustment			Picture quality	Color balance
	25	Used to adjust copy color balance (Single color mode)	Adjustment	Image process (ICU)		Picture quality	Color balance
	26	Used to set the copy color balance adjustment to the default. (Single color copy mode)	Adjustment	Image process (ICU)		Picture quality	Color balance
	27	Used to adjust the gamma/ density in the black edge section of the copy mode image. (Black text and black line reproduction adjustment)	Adjustment	Image process (ICU)		Picture quality	Color balance
	28	Used to check pre-scanning operation for automatic recognition of document in the color auto copy mode. (This simulation is used only in production, and not used in the market.)	Adjustment	Image process (ICU)		Picture quality	Color balance
	33	Used to set the foundation process conditions in the color auto copy mode, the image auto recognition conditions, and the text recognition conditions.	Setting	Image process (ICU)		Picture quality	
48	1	Used to adjust the copy magnification ratio (main scanning and sub scanning directions).	Adjustment			Picture quality	Size/ magnification ratio
	6	Used to adjust each motor RPM.	Adjustment			Operation	
49	1	Used for firmware version up (Machine/FAX).	Version up	Firmware (Machine/FAX)		Operation	
	2	Used to set the data communication speed in version up of the machine firmware.	Version up	Firmware		Operation	
	10	Used for firmware version up (Desk unit).	Version up	Firmware (Desk unit)		Operation	
50	1	Used to adjust the copy image position and the void area (image loss) on print paper in the copy mode. (The similar adjustment can be made also by SIM 50-2 (Simple method).)	Adjustment			Picture quality	Image position

Code		Function (Purpose)	Purpose	Section		Item	
Main	Sub						
50	2	Used to adjust the copy image position and the void area (image loss) on print paper in the copy mode. (Simple method) (The same content of SIM 50-1. However this simulation is easier to perform.)	Adjustment			Picture quality	Image position
	5	Used to adjust the image position and print area in the sub scanning direction. (Print engine section)	Adjustment	ICU/Printer		Picture quality	
	10	Used to adjust the print image center position. (Adjustment is performed in each paper feed position separately.)	Adjustment	Image process (ICU)		Picture quality	Image position
	12	Used to adjust the print image center position. (The adjustment is performed in each document mode separately.)	Adjustment	Image process (ICU)		Picture quality	Image position
	20	Used to adjust the image registration. (Manual adjustment)	Adjustment			Picture quality	Image position
	22	Used to adjust the image registration. (Automatic adjustment)	Adjustment			Picture quality	Image position
	24	Used to display the adjustment data of automatic registration.	Adjustment			Picture quality	Image position
	27	Used to adjust image loss in the FAX/scanner mode.	Adjustment	FAX/Scanner		Picture quality	
51	1	Used to adjust the transfer voltage ON timing.	Adjustment	Process (Photoconductor, developing, transfer, cleaning)	Transfer	Operation	
	2	Used to adjust the contact pressure of paper on the resist roller of each section (each paper feed and duplex feed of the copier). (This adjustment is required when the print image position variations are considerably great or when paper jams occur frequently.)	Adjustment	Paper transport (Paper exit, switchback, transport)		Operation	
52	1	Used to adjust the duplex print mode stacking capacity (Used to adjust the stop position of the duplex unit paper tray width alignment plate. The home position of the width alignment plate is changed by software.)	Adjustment	Duplex		Operation	
53	1	Used to adjust the document stop position in each operation mode of the RADF.	Adjustment	RADF		Operation	
	2	Used to adjust the optical sensor sensitivity in RADF.	Adjustment	RADF		Operation	
60	1	Used to check the operation of ICU PWB image DRAM read/ write.	Operation test/check	ICU (Memory)		Operation	
61	4	Used to adjust the scanner (writing) unit (LED array unit) skew.	Adjustment	Scanner (writing)		Operation	
63	1	Used to check the result of shading correction. (The shading correction data are displayed.)	Adjustment/Setting/ Operation data output, check (display, print)	Scanner (Exposure)		Operation	

Code		Function (Purpose)	Purpose	Section		Item	
Main	Sub						
63	3	Used to adjust the CCD color balance (gamma).	Adjustment	Scanner (reading)		Picture quality	Color balance
	5	Used to set the CCD color balance (gamma) default.	Setting	Scanner (reading)		Picture quality	Color balance
	6	Used to check the color balance (gamma) check patch.	Adjustment/Setting/ Operation data output, check (display, print)	Image process (ICU)		Picture quality	Color balance
	7	Used to set the target color balance (gamma) for auto color balance adjustment. The standard color balance (gamma) or an optional color balance (gamma) is set as the service target.	Setting	Image process (ICU)		Picture quality	Color balance
	8	Used to set the target color balance (gamma) for auto color balance adjustment (SIM 46-24). The service target is set to the default (standard) color balance (gamma).	Setting	Scanner (reading)		Picture quality	Color balance
	9	Used to adjust the CCD gamma (CCD calibration) (copy document mode).	Setting	Scanner (reading)		Picture quality	Color balance
	10	Used to set the copy document mode color balance (gamma) default.	Setting	Scanner (reading)		Picture quality	Color balance
64	1	Used to adjust the operations of the printer section (self-print operation/color). (The print pattern, paper feed mode, print mode, print quantity, and density can be changed optionally.)	Operation test/check	Printer		Operation	
	2	Used to print the color patch image (adjustment pattern). The above color patch image (adjustment pattern) is outputted according to the currently adjusted color balance (gamma). Use SIM 63-7 to read the color patch image (adjustment pattern), which can be used as the service target of the automatic color balance (gamma) adjustment.	Adjustment/Setting/ Operation data output, check (display, print)	Printer		Operation	
	3	Used to check the operations of the printer section (self-print operation/BW). (The print pattern, the paper feed mode, the print mode, the print quantity, and the density can be set optionally.)	Operation test/check	Printer		Operation	
65	1	Used to adjust the touch panel (LCD display section) detection position.	Adjustment	Operation (Display, procedure)			
	2	Used to check the result of the touch panel (LCD display) detection position adjustment. (The coordinates are displayed.)	Adjustment/Setting/ Operation data output, check (display, print)	Operation (Display, procedure)			
67	1	Used to check the operations of printer DRAM read/write.	Operation test/check	Printer		Operation	
	11	Used to set the printer parallel I/F SELECT IN signal.	Setting	Printer		Operation	
	14	Used to perform version up of the firmware. (Printer)	Version up	Firmware (Printer)		Operation	
	17	Used to clear NVRAM. (Printer)	Data clear	Printer		Others	

Code		Function (Purpose)	Purpose	Section		Item	
Main	Sub						
67	18	Used to clear the Flash data. (Printer)	Data clear	Printer		Others	

C. Details

1

1 -1

Purpose	Operation test/check
Function (Purpose)	Used to check the operations of the scanner unit and its control circuit.
Section	Scanner (Image scanning)
Item	Operation
Operation/ Procedure	1. Select the copy (scanning) magnification ratio with the zoom key. The magnification ratio can be increased or decreased with the [ZOOM] key by the increment of 1%. The selected magnification ratio is displayed on the magnification ratio display. 2. Press the [EXECUTE] key.

Scanning is performed at the magnification ratio set in procedure 1 is executed.

During scanning, the [EXECUTE] key is highlighted. If the [EXECUTE] key is pressed under this state, the operation is interrupted.

After completion of scanning, the [EXECUTE] key returns to the normal display.

To resume scanning, start with procedure 2. To change the magnification ratio, start with procedure 1.

Scanning is performed at the max. scanning length (432 mm). If, however, the magnification ratio is set to a value greater than 100% in procedure 1, the scanning length is changed accordingly.

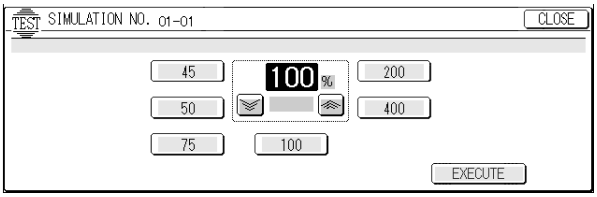

1 -2

Purpose	Operation test/check
Function (Purpose)	Used to check the sensors and detectors in the scanner section and the related circuits.
Section	Scanner (Image scanning)
Item	Operation
Operation/ Procedure	The operations of sensors and detectors in the scanner section are displayed.

The active sensors and detectors are highlighted.

- The light source unit is at the home position. a MHPS is highlighted.
- The light source unit is not at the home position. a MHPS is displayed normally.

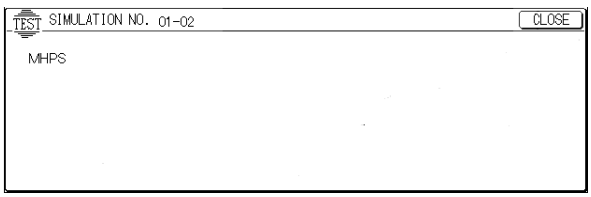

1 -5

Purpose	Operation test/check
Function (Purpose)	Used to check the scanner (scanning) unit and its control circuit.
Section	Scanner (Image scanning)
Item	Operation
Operation/ Procedure	1. Select the copy (scanning) magnification ratio with the key (touch panel). The magnification ratio can be increased or decreased with the [ZOOM] key by the increment of 1%. The selected magnification ratio is displayed on the magnification ratio display. 2. Select the scan mode (Color / B/W). 3. Press the [EXECUTE] key. Scanning is repeated under the conditions set in procedures 1 and 2. During scanning, the [EXECUTE] key is highlighted.

Scanning is repeatedly performed until the [EXECUTE] key or the interruption key is pressed.

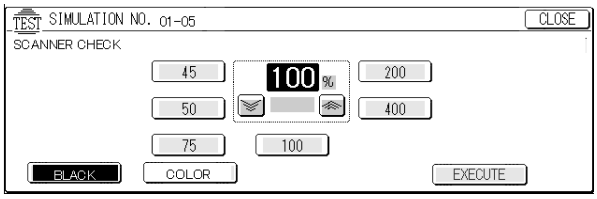

2

2 -1

Purpose	Operation test/check
Function (Purpose)	Used to check the operations of the RADF unit and the control circuit. (The document feed operation is repeatedly performed.)
Section	RADF
Item	Operation
Operation/ Procedure	1. Select the aging mode with the key. When selection is made, the selected item is highlighted. [1:SIDE]: Single copy aging mode [2:SIDE]: Duplex copy aging mode 2. Press the [EXECUTE] key.

Aging of the document feeder is executed under the conditions specified with procedure 1. During aging, the [EXECUTE] key is highlighted. If the [EXECUTE] key is pressed while it is highlighted, the operation is interrupted.

To resume aging, execute with procedure 1. To change the conditions for aging, execute with procedure 1.

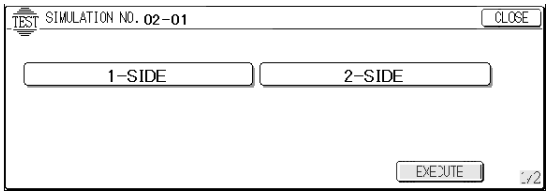

2 -2

Purpose	Operation test/check
Function (Purpose)	Used to check the operations of the sensors and detectors in the RADF unit and the related circuits.
Section	RADF
Item	Operation
Operation/ Procedure	The operations of the sensors and detectors in the RADF are displayed. The active sensors and detectors are highlighted.

[When the RADF is installed]

DSS	Empty sensor
DFD	Resist sensor
DTD	Timing sensor
DRS	Reverse sensor
DES	Paper exit sensor
AUOD	RADF open/close sensor
FGOD	Paper feed section cover open/close sensor
DEOS	Paper repulsion section cover open/close sensor
DWS1	Tray width sensor (297mm)
DWS2	Tray width sensor (11")
DWS3	Tray width sensor (257mm)
DWS4	Tray width sensor (210/8.5")
DWS5	Tray width sensor (182mm)
DLS1	Tray width sensor (240mm)
DLS2	Tray width sensor (300mm)
DWS	Document width sensor

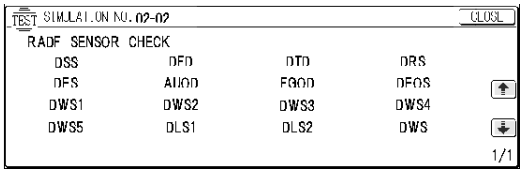

2 -3

Purpose	Operation test/check
Function (Purpose)	Used to check the operations of the loads in the RADF unit and the control circuits.
Section	RADF
Item	Operation
Operation/ Procedure	1. The names of the loads that can be operated are displayed. Select the load to be checked with the key, and the selected load is highlighted. 2. Press the [EXECUTE] key.

[When RADF is installed]

FM FORWORD	Paper feed motor forward rotation
DFM REVERSE	Paper feed motor reverse rotation
DTM FORWORD	Transport motor forward rotation
DTM REVERSE	Transport motor reverse rotation
DRM FORWORD	Paper expulsion motor forward rotation
DRSOL	Paper reverse solenoid

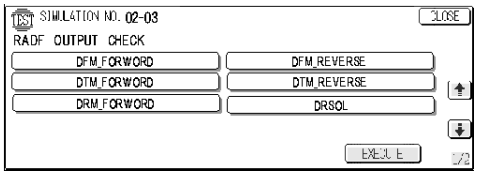

3

3 -2

Purpose	Operation test/check
Function (Purpose)	Used to check the operations of the sensors and detectors in the finisher and the related circuits.
Section	Finisher
Item	Operation
Operation/ Procedure	The operating status of the sensors and detectors of the finisher is displayed. The active sensor/detector display is highlighted.

(Sensors to be detected)

FES	Inlet sensor
FPHPS	Paddle HP sensor
FARHPS	Bundle roller HP sensor
FFJHPS	Alignment HP sensor (F)
FRJHPS	Alignment HP sensor (R)
FAS	Alignment tray sensor
FOBHPS	Paper exit belt HP sensor
FBES	Tray paper sensor
FSLS	Paper surface sensor
FFPS	Binding position sensor
FFHPS	Binding HP sensor
FFRHPS	Binding roller HP sensor
FFES	Binding paper sensor
FFE	Binding clock sensor
FULS	Lift upper limit sensor
FLLS	Lift lower limit sensor
FLE	Lift clock sensor
FSHPS	Slide HP sensor
FSPS	Self prime sensor
FFDS	Front door sensor
FCS	Upper cover sensor
FFDSW	Front door switch
FJS	Joint switch
FSSS	Stapler safety switch
FPTS	Punch timing sensor
FPSS1	Punch side resist sensor 1
FPSS2	Punch side resist sensor 2
FPSS3	Punch side resist sensor 3
FPSS4	Punch side resist sensor 4
FPDS	Punch dust sensor
FPUC	Punch connection
FPSHPS	Punch side resist home position
FPE	Punch motor encoder

[When the sorter is installed]

SBPED	Sensor in bin
SLDHP	Lead cam HP sensor
SGBHP	Guide bar HP sensor
SBUHP	Bin unit HP sensor
SPPD	Paper exit sensor
SJSW	Joint switch
SPSW2	Push switch 2
SPSW3	Push switch 3
SDIPSW1	DIP switch (SW1)
SDIPSW2	DIP switch (SW2)
SDIPSW3	DIP switch (SW3)
SDIPSW4	DIP switch (SW4)
SDIPSW5	DIP switch (SW5)
SDIPSW6	DIP switch (SW6)

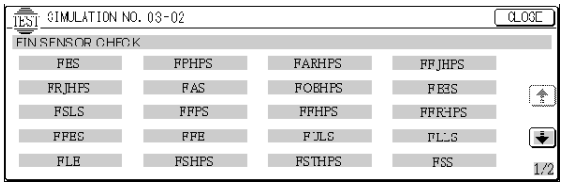

3 -3

Purpose	Operation test/check
Function (Purpose)	Used to check the loads in the finisher and the control circuit.
Section	Finisher
Item	Operation
Operation/ Procedure	1. The names of the loads that can be checked are displayed. Select a load to be checked with the key. 2. Press the [EXECUTE] key. The selected load operates.

During the load operation, the [EXECUTE] key and the load key are highlighted. Under this state, pressing the [EXECUTE] key interrupts the load operation.

(Loads to be selected)

FFM	Transport motor	FFSM	Stapler motor
FPM	Paddle motor	FLM	Shift motor
FAM	Bundle exit motor	FPNM	Punch motor
FFJM	Alignment motor (F)	FPSM	Puncher side resist motor
FRJM	Alignment motor (R)	FFC	Folding clutch
FSM	Slide motor		

(When the sorter is installed)

SBSM	Bin unit shift motor
SPFM	Transport motor
SGBM	Guide bar drive motor

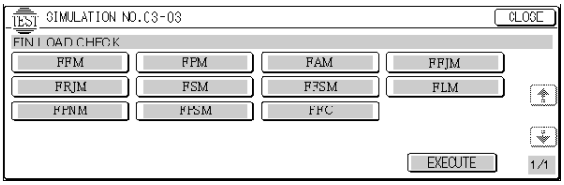

3 -10

Purpose	Operation test/check
Function (Purpose)	Used to adjust the sections in the finisher.
Section	Finisher
Item	Operation
Operation/ Procedure	1. Select the adjustment item with the scroll key. 2. Enter the adjustment value with the 1o-key and press the OK key to set the value.

	Item	Set range	Initial value
A	Saddle binding position adjustment	0 – 400	200
B	Saddle folding position adjustment	0 – 400	200
C	Front alignment position adjustment	0 – 20	10
D	Rear alignment position adjustment	0 – 20	10
E	Staple rear one-point binding position adjustment	0 – 200	100
F	Staple front one-point binding position adjustment	0 – 200	100
G	Staple two-point binding center adjustment	0 – 200	100
H	Staple two-point binding pitch adjustment	0 – 100	50
I	Punch center adjustment	47 – 53	50
J	Punch hole position adjustment	0 – 100	50

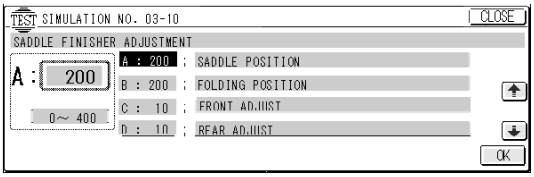

4

4 -2

Purpose	Operation test/check
Function (Purpose)	Used to check the operations of the desk/large capacity tray sensors and detectors and the related circuits.
Section	Paper feed
Item	Operation
Operation/ Procedure	The operating conditions of the sensors and detectors in the paper feed section are displayed. The active sensors and detectors are highlighted.

(Sensors to be detected)

DLUD1	Desk 1cs upper limit detection
DLUD2	Desk 2cs upper limit detection
DLUD3	Desk 3cs upper limit detection
DPED1	Desk 1cs paper empty detector
DPED2	Desk 2cs paper empty detection
DPED3	Desk 3cs paper empty detection
DCSPS1	Desk 1cs remaining quantity detection
DCSPS2	Desk 2cs remaining quantity detection
DCSPS3	Desk 3cs remaining quantity detection
DPPD1	Desk paper transport detection 1
DPPD2	Desk paper transport detection 2
DPPD3	Desk paper transport detection 3
DLUID1	Desk 1cs lift unit installation detection
DLUID2	Desk 2cs lift unit installation detection
DLUID3	Desk 3cs lift unit installation detection
DDOPD	Desk door open detection
DCSS11	Desk 1cs paper size detection 1
DCSS12	Desk 1cs paper size detection 2
DCSS13	Desk 1cs paper size detection 3
DCSS14	Desk 1cs paper size detection 4
DCSS21	Desk 2cs paper size detection 1
DCSS22	Desk 2cs paper size detection 2
DCSS23	Desk 2cs paper size detection 3
DCSS24	Desk 2cs paper size detection 4
DCSS31	Desk 3cs paper size detection 1
DCSS32	Desk 3cs paper size detection 2
DCSS33	Desk 3cs paper size detection 3
DCSS34	Desk 3cs paper size detection 4
LRE	LCC remaining quantity detection
LUD	LCC upper limit detection
LDD	LCC lower limit detection
LPED	LCC paper empty detection
LPFD	LCC paper exit detection
LDSW	LCC door open detection
LTOD	LCC release detection
24V	LCC 24V detection
LCD	LCC cassette detection

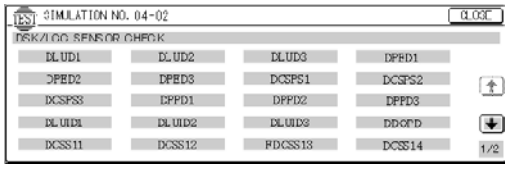

4 -3

Purpose	Operation test/check
Function (Purpose)	Used to check the operations of the desk/large capacity tray loads and the control circuit.
Section	Paper feed
Item	Operation
Operation/ Procedure	1. The names of the loads that can be checked are displayed. Select a load to be checked with the key, and the selected load is highlighted. 2. Press the [EXECUTE] key. The load selected in procedure 1 starts the operation.

During the operation of the load, the [EXECUTE] key is highlighted. If the [EXECUTE] key is pressed while it is highlighted, the operation is stopped.

(Loads to be selected)

DM	Desk transport motor
DLM1	Desk 1cs lift-up motor
DLM2	Desk 2cs lift-up motor
DLM3	Desk 3cs lift-up motor
DPFC1	Desk 1cs paper feed clutch
DPFC2	Desk 2cs paper feed clutch
DPFC3	Desk 3cs paper feed clutch
DTRC	Desk transport clutch
DPFS1	Desk 1cs paper feed solenoid
DPFS2	Desk 2cs paper feed solenoid
DPFS3	Desk 3cs paper feed solenoid
LPFM	LCC transport motor
LLM	LCC lift motor up-down operation
LPFC	LCC paper feed clutch
LPFS	LCC paper feed solenoid
LLED	LCC door open LED
LTRC	LCC transport clutch

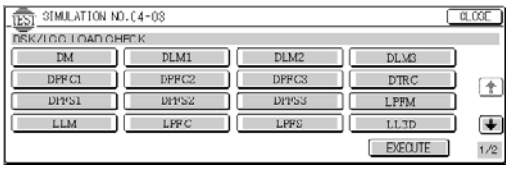

4 -5

Purpose	Operation test/check
Function (Purpose)	Used to check the operations of the clutch TRC and the monitor.
Section	Paper feed
Item	Operation
Operation/ Procedure	1. Press the [TRC ON] key. (The load operates.) 2. Press the [TRC OFF] key to terminate checking.

When the [TRC ON] key or the [TRC OFF] key is pressed, the TRC clutch is turned ON or OFF.

If the response of monitoring TRC ON/OFF is made, DESK SENSOR TRC ON/OFF is displayed.

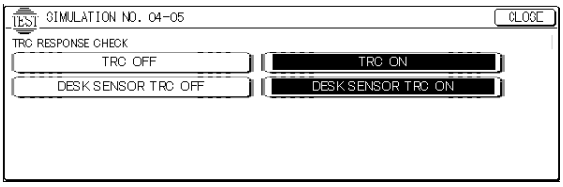

5

5 -1

Purpose	Operation test/check
Function (Purpose)	Used to check the operations of the display lamp (LED)/ LCD on the operation panel and the control circuits.
Section	Operation (Display, procedure)
Item	Operation
Operation/ Procedure	The LCD shows the following message. (The contrast changes in the sequence of Current level → MAX → MIN → Current level → MAX → MIN in every 2sec.) During that period, each LED is lighted for 12sec.

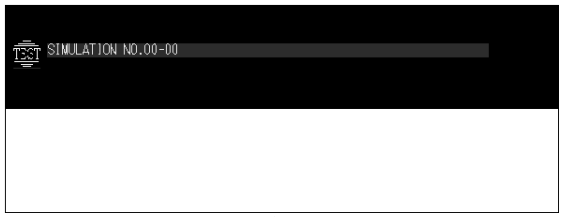

↓ 6sec

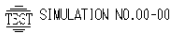

5 -2

Purpose	Operation test/check
Function (Purpose)	Used to check the operations of the heater lamp and its control circuit.
Section	Fusing
Item	Operation
Operation/ Procedure	1. Select the lamp to be checked with the key. 2. Press the [EXECUTE] key.

The selected heater lamp repeats ON/OFF in the frequency of 500msec for 10sec. (The [EXECUTE] key is highlighted.) Then the [EXECUTE] key returns to the normal display. When the [EXECUTE] key is pressed during ON/OFF operation of the heater lamp, the heater lamp is turned OFF and the [EXECUTE] key returns to the normal display.

HL1 (UPPER)	Upper heater lamp
HL2 (LOWER)	Lower heater lamp
HL1&2 (UPPER & LOWER)	Upper/lower fusing heater lamp

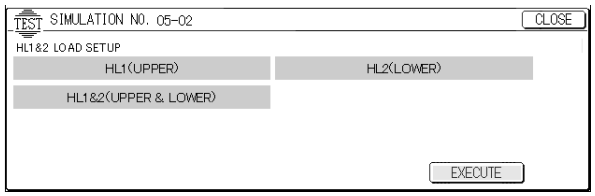

5 -3

Purpose	Operation test/check
Function (Purpose)	Used to check the operations of the scanner lamp and its control circuit.
Section	Scanner (Image scanning)
Item	Operation

Operation/ Procedure	When the [EXECUTE] key is pressed, the scanner lamp is lighted for 10 sec. While the scanner lamp is lighted, the [EXECUTE] key is highlighted. If the [EXECUTE] key is pressed under this state, the lamp is turned OFF. After 10 sec, the scanner lamp is turned OFF. At that time, the [EXECUTE] key returns to the normal display.

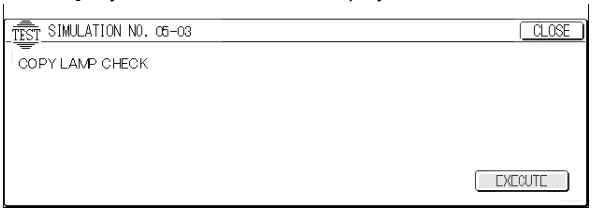

5 -4

Purpose	Operation test/check
Function (Purpose)	Used to check the operations of the discharge lamp and its control circuit.
Section	Process (Photoconductor, developing, transfer, cleaning) Others
Item	Operation
Operation/ Procedure	1. Select the target discharge lamp with the [K], [C], [M], and [Y] keys. (K: Black, C: Cyan, M: Magenta, Y: Yellow) 2. When the [EXECUTE] key is pressed, the key is highlighted and the selected discharge lamp is lighted for 30sec. If the [EXECUTE] key is pressed while the lamp is lighted, the lamp is turned OFF.

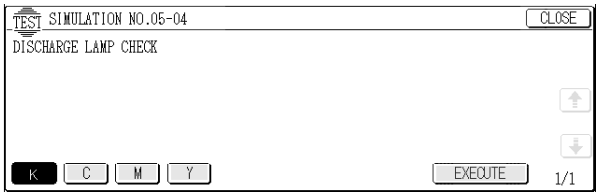

6

6 -1

Purpose	Operation test/check
Function (Purpose)	Used to check the operations of the loads (clutches and solenoids) in the paper transport system, transfer, and fusing, and the control circuit.
Section	Paper transport (paper exit, switchback, transport), transfer, fusing
Item	Operation
Operation/ Procedure	1. The names of the loads that can be checked are displayed. Select the load to be checked with the key, and the selected load is highlighted. 2. Press the [EXECUTE] key. The selected load starts the operation. During the operation of the load, the [EXECUTE] key is highlighted. If the [EXECUTE] key is pressed while it is highlighted, the operation is stopped.

(Loads to be selected)

CPFC	Cassette transport clutch
TRC	Cassette paper feed clutch
MTRC	Manual paper feed clutch
MPFC	Manual transport clutch
GSS	Paper exit gate select solenoid
RRM	Resist roller motor (PSM)
PFM	Paper feed motor (Vertical transport)
FUM	Fusing motor
BLUM	Lift motor
BLUM (R)	∗ Lift motor (Reverse rotation/waste toner transport motor)
OSM	Offset motor (Job separator)
CARB	Calibration plate

∗ When BLUM is ON, the belt moves up.
When BLUM is OFF, the belt moves down.

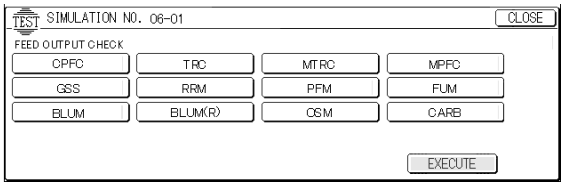

6 -2

Purpose	Operation test/check
Function (Purpose)	Used to check the operations of the fan motors and the control circuits.
Section	Others
Item	Operation
Operation/ Procedure	1. The loads that can be checked are displayed. Select one to be checked. 2. Press the [EXECUTE] key. The selected load is operated. During operation, the [EXECUTE] key is highlighted. If the [EXECUTE] key is pressed while it is highlighted, the operation is stopped.

(Loads to be selected.)

VFM1	Fusing fan 1
VFM2	Fusing fan 2
PSFM	Power fan
PRTCFM	Process exhaust fan

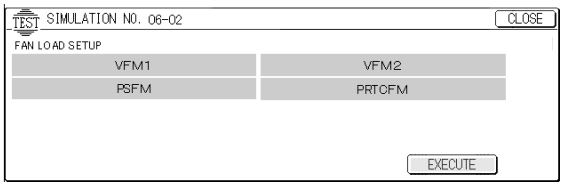

7

7 -1

Purpose	Setting/Operation test/check
Function (Purpose)	Used to set the aging conditions.
Item	Operation
Operation/ Procedure	1. Press each corresponding key to set for the aging operation. (Set items of each key) The selected key is highlighted. 2. Press the [EXECUTE] key. Aging is set and the display returns to the simulation main code entry menu.

∗ The setup contents of this simulation remain unchanged until the power is turned off. When this simulation is executed, SIM 7-8 (Warm-up time display setting) is canceled.

(Set content)

[AGING]	Jam detection setup
[INTERVAL]	Intermittent setup
[MISFEED DISABLE]	Jam detection YES/NO setup
[FUSING DISABLE]	Fusing operation YES/NO detection
[WARMUP DISABLE]	Warm-up saving setup
[DV CHECK DISABLE]	Developing tank detection YES/NO setup
[SHADING DISABLE]	Shading saving setup

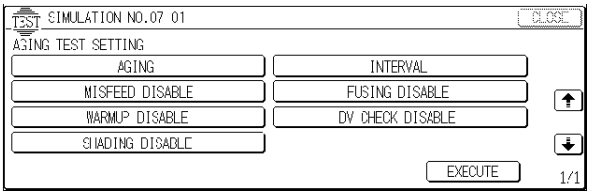

7 -6

Purpose	Setting/Operation test/check
Function (Purpose)	Used to set the cycle of intermittent aging.
Item	Operation
Operation/ Procedure	1. Enter the interval aging cycle time (sec) with the 10-key pad. 2. Press [OK] key (or B/W Start key, Color Start key) to set the entered cycle time.

* The interval time set range is 1 - 999sec. [Default: 3]

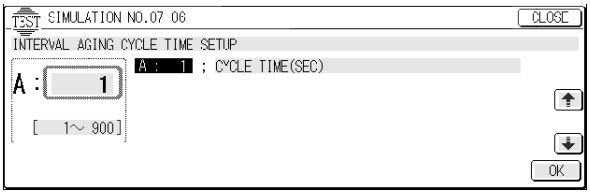

7 -8

Purpose	Setting/Operation test/check
Function (Purpose)	Used to set Yes/No of warm-up time display.
Item	Operation
Operation/ Procedure	Press the [EXECUTE] key to set the warm-up time display. When the [EXECUTE] key is pressed, the warm-up time display setting is executed and the display returns to the simulation main code entry display.

* The setup contents of this simulation remain unchanged until the power is turned off. When SIM 7-1 is executed, the setup contents are canceled.

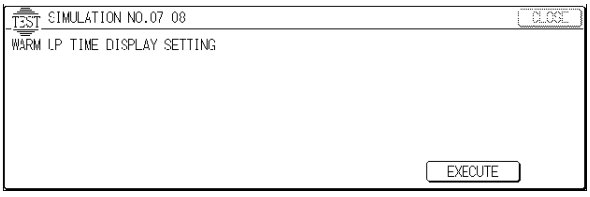

7 -9

Purpose	Setting/Operation test/check
Function (Purpose)	Used to check the image quality and operations of each color.
Section	Others
Item	Picture quality
Operation/ Procedure	1. Select the color of image quantity and operation check with the key. 2. Press the START key.

Copying is performed with the color selected in procedure 1).
When no print color is selected, the operation is made with the all colors.

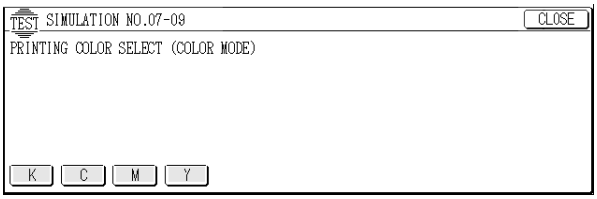

8

8 -1

Purpose	Adjustment/Operation test/check
Function (Purpose)	Used to check and adjust the operations of the developing bias voltage of each color and the control circuit.
Section	Process (Photoconductor, developing, transfer, cleaning)
Operation/ Procedure	(The developing bias output voltage in each of the following print modes can be adjusted and checked.) (Adjustment range) 180 - 700 (Default: See below) 1. Select the color mode with the [K], [C], [M], or [Y] key. 2. Select the copy mode with the scroll key. 3. Enter the adjustment value with the 10-key pad. 4. Press the [EXECUTE] key.

The [EXECUTE] key is highlighted. When the adjustment value entered in procedure 2) and the corresponding voltage is outputted.

The voltage is outputted for 30sec, then the [EXECUTE] key returns to the normal display. When the EXECUTE key is pressed during output of the voltage, the output is stopped and the [EXECUTE] key returns to the normal display.

(Set value)

Color	Item	Operation mode	Adjustment value		Developing bias voltage			
					Monitor (High voltage PWB)		Pin No.	Actual voltage
			Adjustment range	Specified value (Default)	Monitor voltage (Specified value)	Connector		
K	A: HIGH SPEED	High speed (140mm/s) (B & W)	180 – 700	315	7.43 ± 0.1V	CNMONK	3	–315v
	B: MIDDLE SPEED	Middle speed (117mm/s) (Color) (B & W)	180 – 700	315	7.43 ± 0.1V	CNMONK	3	–315v
	C: LOW SPEED	Low speed (58.5mm/s) (Color) (B & W) (Special paper)	180 – 700	285	6.45 ± 0.1V	CNMONK	3	–285v
C	A: MIDDLE SPEED	Middle speed (117mm/s) (Color) (B & W)	180 – 700	265	5.76 ± 0.1V	CNMON	1	–265v
	B: LOW SPEED	Low speed (58.5mm/s) (Color) (B & W) (Special paper)	180 – 700	235	4.75 ± 0.1V	CNMON	1	–235v
M	A: MIDDLE SPEED	Middle speed (117mm/s) (Color) (B & W)	180 – 700	265	5.76 ± 0.1V	CNMON	5	–265v
	B: LOW SPEED	Low speed (58.5mm/s) (Color) (B & W) (Special paper)	180 – 700	235	4.75 ± 0.1V	CNMON	5	–235v
Y	A: MIDDLE SPEED	Middle speed (117mm/s) (Color) (B & W)	180 – 700	240	4.75 ± 0.1V	CNMON	9	–240v
	B: LOW SPEED	Low speed (58.5mm/s) (Color) (B & W) (Special paper)	180 – 700	210	3.78 ± 0.1V	CNMON	9	–210v

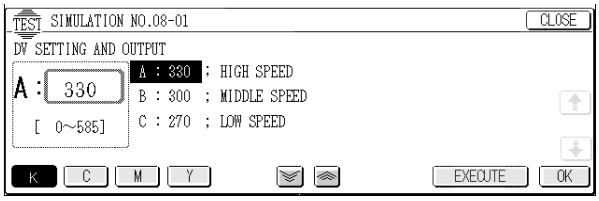

8 -2

Purpose	Adjustment/Operation test/check
Function (Purpose)	Used to check and adjust the operation of each print mode main charger grid voltage and the control circuit.
Section	Process (Photoconductor, developing, transfer, cleaning)
Operation/ Procedure	(The charging/grid output voltage in each print mode can be adjusted and checked.) 1. Select the color mode with the [K], [C], [M], and [Y] keys. 2. Select the print mode with [↑] key and [↓] key. 3. Enter the adjustment value with the 10-key pad. 4. Press the [EXECUTE] key.

The [EXECUTE] key is highlighted, the adjustment value entered in procedure 2 is set, and the voltage corresponding to the set value is outputted.

The voltage is supplied for 30 sec, then the [EXECUTE] key returns to the normal display.

If the [EXECUTE] key is pressed while the voltage is supplied, the voltage output is stopped and the [EXECUTE] key returns to the normal display.

(Set value)

Color	Item	Operation mode	Adjustment value		Main charger grid voltage			
					Monitor (High voltage PWB)		Pin No.	Actual voltage
			Adjustment range	Specified value (Default)	Monitor voltage (Specified value)	Connector		
K	A: HIGH SPEED	High speed (140mm/s) (B & W)	180 – 700	620	53.5 ± 0.2v	CNMONK	1	–620v
	B: MIDDLE SPEED	Middle speed (117mm/s) (Color) (B & W)	180 – 700	620	53.5 ± 0.2v	CNMONK	1	–620v
	C: LOW SPEED	Low speed (58.5mm/s) (Color) (B & W) (Special paper)	180 – 700	590	50.6 ± 0.2v	CNMONK	1	–590v
C	A: MIDDLE SPEED	Middle speed (117mm/s) (Color) (B & W)	180 – 700	620	53.5 ± 0.2v	CNMON	3	–620v
	B: LOW SPEED	Low speed (58.5mm/s) (Color) (B & W) (Special paper)	180 – 700	590	50.6 ± 0.2v	CNMON	3	–590v
M	A: MIDDLE SPEED	Middle speed (117mm/s) (Color) (B & W)	180 – 700	620	53.5 ± 0.2v	CNMON	7	–620v
	B: LOW SPEED	Low speed (58.5mm/s) (Color) (B & W) (Special paper)	180 – 700	590	50.6 ± 0.2v	CNMON	7	–590v
Y	A: MIDDLE SPEED	Middle speed (117mm/s) (Color) (B & W)	180 – 700	620	53.5 ± 0.2v	CNMON	11	–620v
	B: LOW SPEED	Low speed (58.5mm/s) (Color) (B & W) (Special paper)	180 – 700	590	50.6 ± 0.2v	CNMON	11	–590v

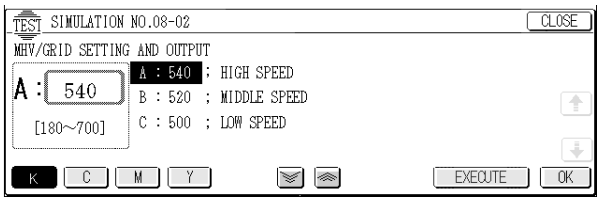

8 -6

Purpose	Adjustment/Operation test/check
Function (Purpose)	Used to check and adjust the operation of the transfer charger current and the control circuit.
Section	Process (Photoconductor, developing, Transfer transfer, cleaning)
Operation/ Procedure	1. Select the color mode with the [K], [C], [M], and [Y] keys. 2. Select the copy mode with the scroll key. 3. Enter the adjustment value with the 10-key pad. 4. Press the [EXECUTE] key.

The [EXECUTE] key is highlighted, the adjustment value entered in procedure 2 is set, and the voltage corresponding to the set value is outputted.

The voltage is supplied for 30 sec, then the [EXECUTE] key returns to the normal display.

If the [EXECUTE] key is pressed while the voltage is supplied, the voltage output is stopped and the [EXECUTE] key returns to the normal display.

In this simulation, when the transfer voltage is supplied, the transfer belt and the OPC drum rotates at the same time. Therefore, the above parts are not damaged.

(Items to be selected/replaced)

Item		Print mode			Standard setting value (Default)				Adjustment range	Output voltage (Kv)			
					K	C	M	Y		K	C	M	Y
A	PLAIN_SPX_CL	Color	Normal paper	117mm/s	173	159	132	132	51 - 255	2.4	2.4	2.4	2.4
B	PLAIN_DPX_CL	Color	Normal paper(Duplex mode)	117mm/s	188	173	142	142		2.7	2.7	2.7	2.7
C	OHP1_CL	Color	Transparency film 1	117mm/s	204	187	153	153		3	3	3	3
D	OHP2_CL	Color	Transparency film 2	58.5mm/s	137	150	153	163		1.7	2.2	3	3.3
E	HEAVY P1_SPX_CL	Color	Thick paper 1	58.5mm/s	158	146	122	122		2.1	2.1	2.1	2.1
F	HEAVY_P1_DPX_CL	Color	Thick paper 1(Duplex mode)	58.5mm/s	188	173	142	142		2.7	2.7	2.7	2.7
G	HEAVY_P2_CL	Color	Thick paper 2	58.5mm/s	173	159	132	132		2.2	2.2	2.2	2.2
H	ENV_CL	Color	Envelope	117mm/s	163	150	125	125		2.2	2.2	2.2	2.2
I	PLAIN_SPX_BW	B & W	Normal paper	140mm/s	168					2.3			
J	PLAIN_DPX_BW	B & W	Normal paper(Duplex mode)	140mm/s	178					2.5			
K	OHP1_BW	B & W	Transparency film 1	117mm/s	204					3			
L	OHP2_BW	B & W	Transparency film 2	58.5mm/s	137					1.7			
M	HEAVY_P1_SPX_BW	B & W	Thick paper 1	58.5mm/s	147					1.9			
N	HEAVY_P1_DPX_BW	B & W	Thick paper 1(Duplex mode)	58.5mm/s	178					2.5			
O	HEAVY_P2_BW	B & W	Thick paper 2	58.5mm/s	163					2.2			
P	ENV_BW	B & W	Envelope	140mm/s	168					2.3			

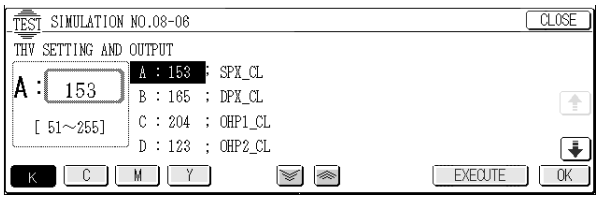

9

9 -2

Purpose	Operation test/check
Function (Purpose)	Used to check the operation of the sensors and detectors in the inverter/duplex section and the control circuit.
Section	Inverter/Duplex
Item	Operation
Operation/ Procedure	The operations of sensors and detectors in the inverter/ duplex section are displayed. The active sensors and detectors are highlighted.

(Check item)

BPID	Inverter paper entry detection
BPPD1	Inverter transport detection 1
BPPD2	Inverter transport detection 2
BPRD	Inverter reverse detection
BPOD	Inverter paper exit detection
BPFD	Inverter full detection

BDD1	Inverter door detection 1
BDD2	Inverter door detection 2
APPD1	ADU transport detection 1
APPD2	ADU transport detection 2
APHPS	ADU alignment plate home position
POD1	Machine paper exit detection
BYSET	Inverter installation detection
ADUDSET	ADU installation detection
ADUSET	ADU door open/close detection

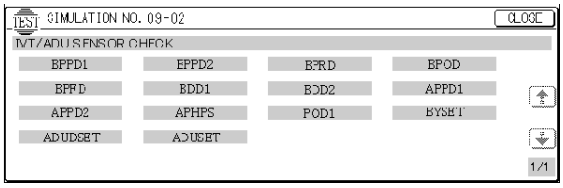

9 -3

Purpose	Operation test/check
Function (Purpose)	Used to check the operations of the loads (motor, clutch, solenoid) in the inverter/duplex section and the control circuits.
Section	Inverter/Duplex
Item	Operation
Operation/ Procedure	1. Select the load to be checked with the 10-key pad. 2. Press the [EXECUTE] key. The load selected in procedure 1 operates.

While the load operates, the [EXECUTE] key is highlighted.
When the [EXECUTE] key is pressed under this state, the operation of the load can be interrupted.

BIM	Inverter paper entry motor
BRMFW	Inverter reverse motor (Normal rotation)
BRMRV	Inverter reverse motor (Reverse rotation)
BGSOL	Inverter gate solenoid
BTMFW	Inverter transport motor (Normal rotation)
BTMRV	Inverter transport motor (Reverse rotation)
ATM	ADU transport motor
APAM	ADU alignment motor
ATRC	ADU transport clutch

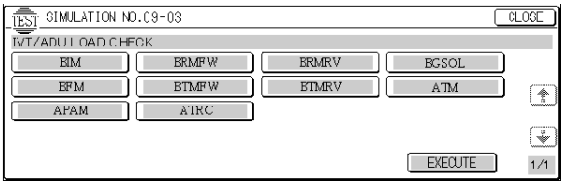

14

14 -0

Purpose	Clear/cancel (Trouble etc.)
Function (Purpose)	Used to cancel self diag troubles H3, H4, and H5. Inhibition of the color copy mode operation is canceled.
Item	Trouble Error
Operation/ Procedure	1. Press the [EXECUTE] key. (YES/NO key display) 2. When YES key is pressed, the following troubles are cleared. (Cancel with NO key.)

(Trouble codes to be canceled)

Target trouble codes	Descriptions
H3-00	Heat roller high temperature detection (HL1)
H3-01	Heat roller high temperature detection (HL2)
H4-00	Heat roller low temperature detection (HL1)
H4-01	Heat roller low temperature detection (HL2)
H5-01	Five continuous detections of POD1 not-reached jam

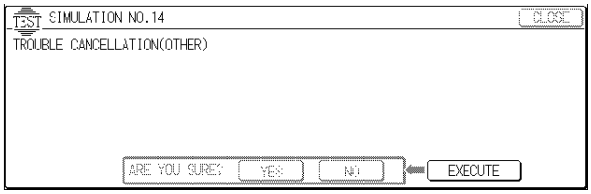

15

15 -0

Purpose	Clear/cancel (Trouble etc.)
Function (Purpose)	Self diag U6-09 (large capacity paper feed tray) trouble cancel
Section	Paper feed
Item	Trouble Error
Operation/ Procedure	Press the [EXECUTE] key to cancel the trouble. * Press the [CLOSE] key to terminate the simulation.

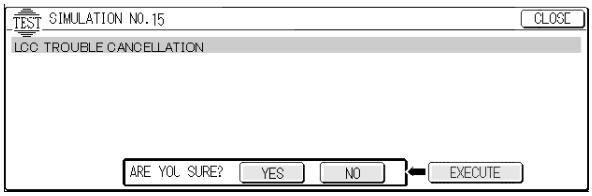

16

16 -0

Purpose	Clear/cancel (Trouble etc.)
Function (Purpose)	Used to cancel self diag trouble U2.
Item	Trouble Error
Operation/ Procedure	1. Press the [EXECUTE] key. (YES/NO key display) 2. When YES key is pressed, the following troubles are cleared. (Cancel with NO key.)

(Trouble codes to be canceled)

Target trouble codes	Descriptions
U2-00	EEPROM read/write error (OPE)
U2-11	EEPROM check sum error (OPE)
U2-80	EEPROM read/write error (SCN)
U2-81	EEPROM check sum error (SCN)
U2-90	EEPROM read/write error (PCU)
U2-91	EEPROM check sum error (PCU)

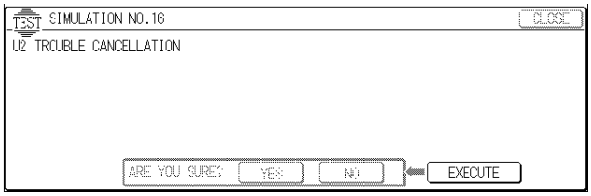

17

17 -0

Purpose	Clear/cancel (Trouble etc.)
Function (Purpose)	Used to cancel self diag troubles PF (copy inhibition command from the host computer).
Section	Communication (RIC/MODEM)
Item	Trouble Error
Operation/ Procedure	1. Press the [EXECUTE] key. (YES/NO key display) 2. When YES key is pressed, the following troubles are cleared. (Cancel with NO key.)

(Trouble codes to be canceled)

Target trouble codes	Descriptions
PF-00	PC copy inhibition signal reception

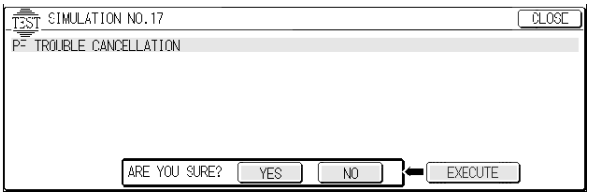

21

21 -1

Purpose	Setting
Function (Purpose)	Used to set the maintenance cycle.
Item	Specifications Counter
Operation/ Procedure	1. The current setup is displayed. (Highlighted) 2. When the maintenance cycle is selected with the key, the selected key is highlighted.

The maintenance message is displayed in every selected cycle.

When FREE is selected, the maintenance display is not shown.

(Cycle to be set)

Item	Set value	Content	Default
CYCLE	0	5K	100K
	1	10K	
	2	15K	
	3	40K	
	4	50K	
	5	100K	
	6	FREE	
BELT	50	100K	100K
	100	100K	
FUSER	50	100K	100K
	100	100K	

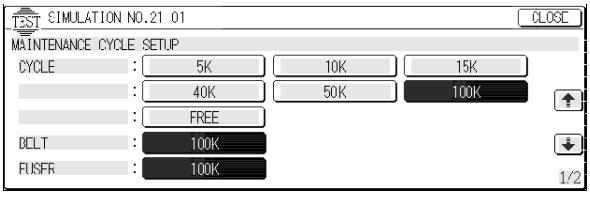

22

22 -1

Purpose	Adjustment/Setting/Operation data output and check (display, print)
Function (Purpose)	Used to check the print count value in each section and each operation mode. (Used to check the maintenance timing.)
Item	Counter
Operation/ Procedure	The counter values are displayed.

(Counter values to be displayed)

TOTAL BW	All valid paper counters (B/W)
TOTAL COL	All valid paper counters (Color)
PRINTER BW	Print counter (B/W)
PRINTER COL	Print counter (Color)
SINGLE COLOR	Single color
COPY BW	Copy counter (B/W)
COPY COL	Copy counter (Color)
FAX PRINT	FAX print counter (B/W only)
OTHERS BW	Other counter (B/W only)
OTHERS COL	Other counter (Color)
MAINTENANCE ALL	Maintenance counter (Total)
MAINTENANCE COL	Maintenance counter (Color)
BELT UNIT	Transfer unit print counter
BELT UNIT RANGE	Transfer unit accumulated mileage
BELT UNIT DAY	Transfer unit use days
FUSER UNIT	Fusing unit print counter
FUSER ACUM DAY	Fusing unit use days

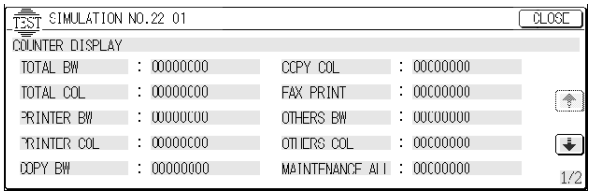

22 -2

Purpose	Adjustment/Setting/Operation data output, check (display, print)
Function (Purpose)	Used to check the total misfeed count and the total trouble count. (If the misfeed count is considerably great, it may be judged as necessary to repair. By dividing this count by the total count, the misfeed rate can be obtained.)
Item	Trouble
Operation/ Procedure	The counter values are displayed.

(Display contents)

Display	Content
MACHINE JAM	Machine jam counter
RADF JAM	ADF jam counter
TROUBLE	Trouble counter

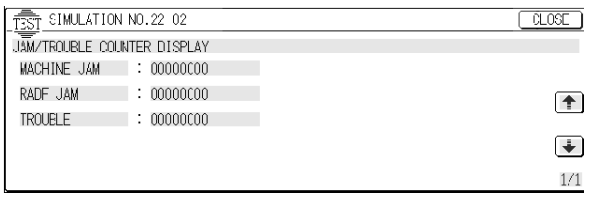

22 -3

Purpose	Adjustment/Setting/Operation data output, check (display, print)
Function (Purpose)	Used to check misfeed positions and the misfeed count of each position. (If the misfeed count is considerably great, it may be judged as necessary to repair.) (Machine section only)
Item	Trouble Misfeed
Operation/ Procedure	Used to display the misfeed history.

The misfeed history sections are displayed sequentially from the latest one. Max. 50 items of information can be stored, and the oldest one is deleted sequentially. The trouble position may be presumed with this data.

(Jam code list)

Group	Sensor	Display	Comment
Paper feed	–	********	
	PFD1	TRAY1	Tray 1 paper feed jam (PFD1 not-reached jam)
		PFD1_ND1	PFD1 not-reached jam (Desk 1 feed paper)
		PFD1_ND2	PFD1 not-reached jam (Desk 2 feed paper)
		PFD1_ND3	PFD1 not-reached jam (Desk 3 feed paper)
		PFD1_NDU	PFD1 not-reached jam (Desk duplex tray feed paper)
		PFD1_NLC	PFD1 not-reached jam (LCC feed paper)
		PFD1_ST1	PFD1 remaining jam (Tray 1 feed paper)
		PFD1_SD1	PFD1 remaining jam (Desk 1 feed paper)
		PFD1_SD2	PFD1 remaining jam (Desk 2 feed paper)
		PFD1_SD3	PFD1 remaining jam (Desk 3 feed paper)
		PFD1_SDU	PFD1 remaining jam (Desk duplex tray feed paper)
Paper feed	PFD1	PFD1_SLC	PFD1 remaining jam (LCC feed paper)
		PPD1_NT1	PPD1 not-reached jam (Tray 1 feed paper)
		PPD1_ND1	PPD1 not-reached jam (Desk 1 feed paper)
		PPD1_ND2	PPD1 not-reached jam (Desk 2 feed paper)
		PPD1_ND3	PPD1 not-reached jam (Desk 3 feed paper)
		PPD1_NDU	PPD1 not-reached jam (Desk duplex tray feed paper)
	PPD1	PPD1_NLC	PPD1 not-reached jam (LCC feed paper)
		PPD1_ST1	PPD1 remaining jam (Tray 1 feed paper)
		PPD1_SD1	PPD1 remaining jam (Desk 1 feed paper)
		PPD1_SD2	PPD1 remaining jam (Desk 2 feed paper)
		PPD1_SD3	PPD1 remaining jam (Desk 3 feed paper)
		PPD1_SDU	PPD1 remaining jam (Desk duplex tray feed paper)
		PPD1_SLC	PPD1 remaining jam (LCC feed paper)
Paper feed	PPD2	BPT	Manual feed tray paper feed jam (PPD2 not-reached)
		PPD2_NT1	PPD2 not-reached jam (Tray 1 feed paper)
		PPD2_ND1	PPD2 not-reached jam (Desk 1 feed paper)
		PPD2_ND2	PPD2 not-reached jam (Desk 2 feed paper)
		PPD2_ND3	PPD2 not-reached jam (Desk 3 feed paper)
		PPD2_NDU	PPD2 not-reached jam (Desk duplex tray feed paper)
		PPD2_NLC	PPD2 not-reached jam (LCC feed paper)
		PPD2_BPT	PPD2 remaining jam (Manual paper feed tray feed paper)
		PPD2_ST1	PPD2 remaining jam (Tray 1 feed paper)
		PPD2_SD1	PPD2 remaining jam (Desk 1 feed paper)
		PPD2_SD2	PPD2 remaining jam (Desk 2 feed paper)
		PPD2_SD3	PPD2 remaining jam (Desk 3 feed paper)
		PPD2_SDU	PPD2 remaining jam (Desk duplex tray feed paper)
		PPD2_SLC	PPD2 remaining jam (LCC feed paper)
Transport system	PPD2	PPD2_PRE	PPD2 jam (Image ready signal is not supplied from PRT.)
		PPD2_PRI	PPD2 jam (Print request is not supplied from PRT.)
	BPD	BPD_N	BPD not-reached jam
		BPD_S	BPD remaining jam
	POD1	POD1_N	POD1 not-reached jam
		POD1_S	POD1 remaining jam
	POD2	POD2_N	POD2 not-reached jam
		POD2_S	POD2 remaining jam
Desk	DPPD1	DPPD1_N	Desk transport sensor 1 (DPPD1) not-reached jam
		DPPD1_S	Desk transport sensor 1 (DPPD1) remaining jam
	DPPD2	DPPD2_N	Desk transport sensor 2 (DPPD2) not-reached jam
		DPPD2_S	Desk transport sensor 2 (DPPD2) remaining jam
	DPPD3	DPPD3_N	Desk transport sensor 3 (DPPD3) not-reached jam
		DPPD3_S	Desk transport sensor 3 (DPPD3) remaining jam
LCC	LPFD	LCC	LCC paper feed jam (LPFD not-reached)
		LPFD_S	LCC unit LPFD remaining jam
Inverter	BPPD1	BPPD1_N	Reverse unit transport sensor 1 (BPPD1) not-reached jam
		BPPD1_S	Reverse unit transport sensor 1 (BPPD1) remaining jam
	BPPD2	BPPD2_N	Reverse unit transport sensor 2 (BPPD2) not-reached jam
		BPPD2_S	Reverse unit transport sensor 2(BPPD2) remaining jam
	BPPD3	BPPD3_N	Reverse unit transport sensor 3 (BPPD3) not-reached jam
		BPPD3_S	Reverse unit transport sensor 3 (BPPD3) remaining jam

Group	Sensor	Display	Comment
Inverter	BPOD	BPOD_N	Reverse unit paper exit sensor (BPOD) not-reached jam
		BPOD_S	Reverse unit paper exit sensor (BPOD) remaining jam
	BPRD	BPRD_N	Reverse unit reverse sensor (BPRD) not-reached jam
		BPRD_S	Reverse unit reverse sensor (BPRD) remaining jam
ADU	APPD1	APPD1_N	ADU transport sensor 1 (APPD1) not-reached jam
		APPD1_S	ADU transport sensor 1 (APPD1) remaining jam
	APPD2	APPD2_N	ADU transport sensor 2 (APPD2) not-reached jam
		APPD2_S	ADU transport sensor 2 (APPD2) remaining jam
	APPD3	APPD3_N	ADU transport sensor 3 (APPD3) not-reached jam
		APPD3_S	ADU transport sensor 3 (APPD3) remaining jam
Finisher	FES	FES_N	Inlet port sensor (FES) not-reached jam
		FES_S	Inlet port sensor (FES) remaining jam
	FFPS	FFPS_N	Binding position sensor (FFPS) not-reached jam
		FFPS_S	Binding position sensor (FFPS) remaining jam
	FSTPL	FSTPL	Staple (FSTPL) jam
	FPNCH	FPNCH	Punch (FPNCH) jam
	FDOP	FDOP	Door open (FDOP) jam
	FPUSH	FPUSH	Bundle roller pinching (FPUSH) jam
Sorter	SPPD	SPPD_N	Sorter transport sensor (SPPD) not-reached jam
		SPPD_S	Sorter transport sensor (SPPD) remaining jam
	SDOP	SDOP	Sorter door open (SDOP) jam

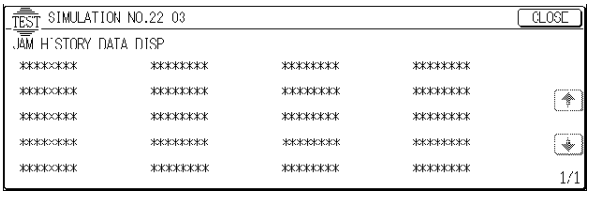

22 -4

Purpose	Adjustment/Setting/Operation data output, check (display, print)
Function (Purpose)	Used to check the total trouble (self diag) history.
Item	Trouble
Operation/ Procedure	Used to display the total trouble history.

The trouble history error codes are displayed sequentially from the latest one. Max. 30 items of information can be stored, and the oldest one is deleted sequentially. The machine condition can be presumed according to this data.

(Trouble code list)

Detection models	Main code	Sub code	Content
All	C2	10	Image density sensor error/Transfer charger error (Black)
All	E7	01	Image data memory trouble
		10	Shading trouble (Black correction)
		11	Shading trouble (White correction)
		20	LED controller initial trouble (Black)
		21	LED controller initial trouble (Cyan)
		22	LED controller initial trouble (Magenta)
		23	LED controller initial trouble (Yellow)
		24	LED controller output trouble (Black)
		25	LED controller output trouble (Cyan)
		26	LED controller output trouble (Magenta)
		27	LED controller output trouble (Yellow)
		28	LED control ASIC connection abnormality
		40	Color correction data write error
		41	Color correction data transfer error
		80	ICU-SCN communication trouble
		90	ICU-PCU communication trouble
	F1	00	Finisher communication trouble (PCU detection)
		02	Finisher transport motor trouble (Finisher detection)
		03	Finisher paddle motor trouble
		06	Finisher slide motor trouble
		10	Finisher staple motor abnormality (Finisher detection)
		11	Finisher bundle process motor abnormality (Finisher detection)
		15	Finisher tray lift motor abnormality (Finisher detection)
		19	Finisher front alignment motor abnormality (Finisher detection)
		20	Finisher rear alignment motor abnormality (Finisher detection)
		31	Finisher folding sensor trouble
		32	Finisher punch unit communication trouble
		33	Finisher punch side resist motor trouble
		34	Finisher punch motor trouble
		35	Finisher punch side resist sensor trouble
		36	Finisher punch resist sensor trouble
		37	Finisher backup RAM trouble
		38	Finisher punch backup ROM trouble
		39	Finisher punch dust sensor trouble
		40	Finisher punch power off trouble
		83	Sorter push bar motor abnormality
		89	Sorter bin shift motor abnormality
		91	Paper sensor abnormality in the sorter bin
	F2	15	Drum unit initial detection trouble (Black)
		16	Drum unit initial detection trouble (Cyan)
		17	Drum unit initial detection trouble (Magenta)
		18	Drum unit initial detection trouble (Yellow)
		19	Transfer unit initial detection trouble
		39	Process thermistor trouble
		40	Toner empty sensor abnormality (Black)
		41	Toner empty sensor abnormality (Cyan)
		42	Toner empty sensor abnormality (Magenta)
		43	Toner empty sensor abnormality (Yellow)
		44	Image density sensor (for black) trouble (Transfer belt surface reflection ratio abnormality)
		45	Image density sensor (for color) trouble (Calibration plate surface reflection ratio abnormality)

Detection models	Main code	Sub code	Content
All	F2	58	Process humidity sensor trouble
		70	Developing unit improper cartridge detection (Black)
		71	Developing unit improper cartridge detection (Cyan)
		72	Developing unit improper cartridge detection (Magenta)
		73	Developing unit improper cartridge detection (Yellow)
		74	Developing unit CRUM trouble (Black)
		75	Developing unit CRUM trouble (Cyan)
		76	Developing unit CRUM trouble (Magenta)
		77	Developing unit CRUM trouble (Yellow)
		78	Registration trouble
		80	Half-tone process control 1st batch error (Black)
		81	Half-tone process control 1st batch error (Cyan)
		82	Half-tone process control 1st batch error (Magenta)
		83	Half-tone process control 1st batch error (Yellow)
		84	Half-tone process control 2nd batch error (Black)
		85	Half-tone process control2nd batch error (Cyan)
		86	Half-tone process control 2nd batch error (Magenta)
		87	Half-tone process control 2nd batch error (Yellow)
		90	Half-tone process control limit error
	F3	12	Cassette 1 lift-up trouble
	F9	00	
		01	
		03	
		20	
	H2	00	Thermistor open (HL1)
		01	Thermistor open (HL2)
	H3	00	Fusing section high temperature trouble (HL1)
		01	Fusing section high temperature trouble (HL2)
	H4	00	Fusing section low temperature trouble (HL1)
		01	Fusing section low temperature trouble (HL2)
	H5	01	3 continuous detections of POD1 not-reached jam
	H8	01	Fusing unit initial detection trouble
	L1	00	Mirror feed trouble
	L3	00	Mirror return trouble
	L4	02	Paper feed motor lock trouble
		06	Transfer belt lift motor trouble
		11	Shift motor trouble
	L8	01	No full wave signal
		02	Full wave signal width abnormality
		04	Main switch abnormality detection
	PF	00	RIM copy inhibit signal reception
	U0	00	ICU-OPE communication trouble (ICU/OPE detection)
	U1	02	RTC read trouble

Detection models	Main code	Sub code	Content
All	U2	00	EEPROM read/write error (SCN detection)
		11	EEPROM check sum error (SCN detection)
		22	SRAM memory check sum error
		30	Manufacturing No. data discrepancy (ICU ⇔ PCU)
	U2	80	EEPROM read/write error (SCN detection)
		81	EEPROM check sum error (SCN detection)
		90	EEPROM read/write error (PCU detection)
		91	EEPROM check sum error (PCU detection)
	U4	02	ADU alignment plate operation abnormality
	U5	00	ADF communication trouble
		01	ADF resist sensor trouble
		02	ADF repulsion sensor trouble
		03	ADF timing sensor trouble
		11	Paper feed motor operation abnormality
	U6	00	Desk communication trouble
		01	Desk tray 1 lift motor trouble
		02	Desk tray 2 lift motor trouble
		03	Desk tray 3 lift motor trouble
		10	Desk transport motor trouble
	U7	00	RIC communication trouble

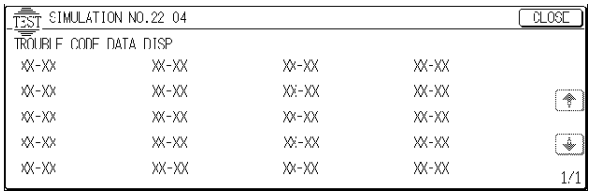

22 -5

Purpose	Others
Function (Purpose)	Used to check the ROM version of each unit (section).
Item	Software
Operation/ Procedure	If there is any problem in the software, check the ROM version of each section with this simulation and replace with a new version if necessary.

(Sections to be displayed)

ICU	ICU control
PCU	Engine control section
SCN	Scanner control section
COL REV DATA	Color correction ROM
OPE PROG	OPE control section
PRT BOOT	PRT boot
PRT PROG	PRT control section
FAX	FAX control section
FIN-SORTER	Finisher/Sorter
PUNCH	Punch unit
DSK	Desk
LCC	Large capacity cassette
ADF	Automatic document feeder
NIC	NIC

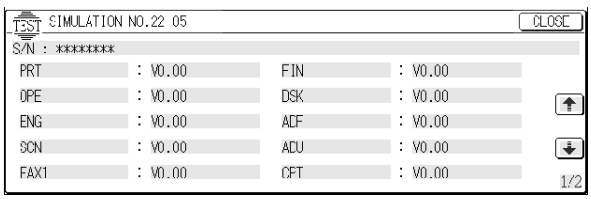

22 -6

Purpose	Adjustment/Setting/Operation data output, check, (display, print)
Function (Purpose)	Used to print the setting and adjustment data list.
Item	Data Setting/Adjustment data
Operation/ Procedure	When installing or servicing, execute this simulation to print and store the adjustment values and setting data for use in the next servicing. (Memory trouble, PWB replacement, etc.) In this case, the print conditions can be set optionally. 1. Select the setup item. (The selected item is highlighted.) 2. Set the item and conditions with the 10-key pad. 3. Press the [EXECUTE] key to print various data.

Item	Display item		Low	High	Default	Description
A	DATA PATTERN		1	1	1	
	=1					
B	PAPER SELECT		1	6	2	Cassette selection
	=1	MANUAL				Manual paper feed
	=2	CAS1				Cassette 1
	=3	CAS2				Cassette 2
	=4	CAS3				Cassette 3
	=5	CAS4				Cassette 4
	=6	LCC				LCC

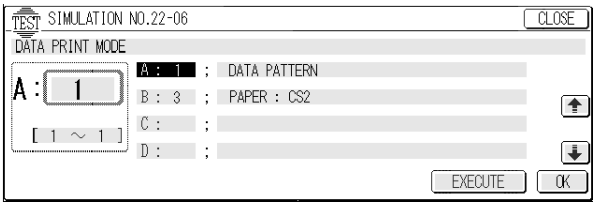

22 -7

Purpose	User data output/Check (Display/Print)
Function (Purpose)	Used to display the key operator code. (Used when the customer forgets the key operator code.)
Item	Data User data
Operation/ Procedure	The key operator code is displayed.

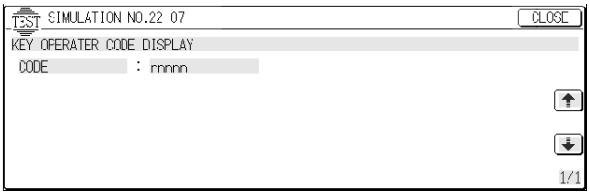

22 -8

Purpose	Adjustment/Setting/Operation data output, check (display, print)
Function (Purpose)	Used to check the number of uses of the staple, and the RADF.
Item	Counter
Operation/ Procedure	Various counter values are displayed. This data is used to check the use frequency of each section. According to this data, maintenance is executed. (Counter values to be displayed with this simulation)

Display	Content
MIRROR SCAN	Scan counter
RADF	ADF counter
STAPLER	Staple counter
PUNCHER	Puncher counter
INVERTER	Inverter counter

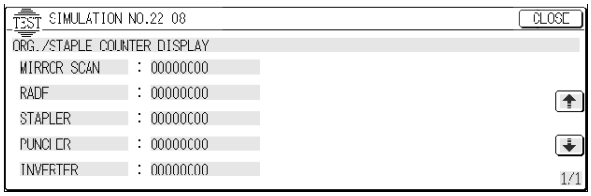

22 -9

Purpose	Adjustment/Setting/Operation data output, check (display, print)
Function (Purpose)	Used to check the number of uses (print quantity) of each paper feed section.
Section	Paper feed
Item	Counter
Operation/ Procedure	The counter values are displayed. This data is used to check the use frequency of each paper feed section. According to this data, maintenance is performed. (Counter values to be displayed with this simulation)

Display	Content
MFT TOTAL	Manual paper feed (total) counter
MFT CB1	Manual paper feed (heavy paper 1) counter
MFT CB2	Manual paper feed (heavy paper 2) counter
MFT OHP1	Manual paper feed (OHP1) counter
MFT OHP2	Manual paper feed (OHP2) counter
MFT ENV	Manual paper feed (Envelope) counter
TRAY1	Tray 1 counter
TRAY2	Tray 2 counter
TRAY3	Tray 3 counter
TRAY4	Tray 4 counter
LCC	LCC counter
ADU	Duplex counter

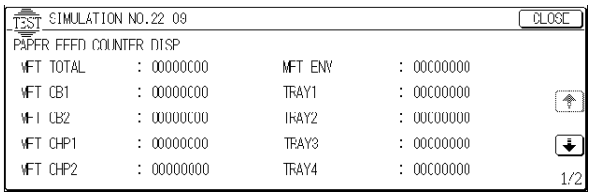

22 -10

Purpose	Adjustment/Setting/Operation data output, check (display, print)
Function (Purpose)	Used to check the system configuration (option, internal hardware).
Item	Specifications Option
Operation/ Procedure	The counter values are displayed.

This simulation allows to check the system configuration. The devices and the option units which are installed are displayed with the model names, etc.

ADF	Automatic document feeder
DESK/ADU	Desk/Duplex unit
LCC	Large capacity cassette
INVERTER	Bypass module
FIN/SORTER	Rear process unit

PUNCHER	Punch unit
FAX	FAX
FAX MEMORY	FAX expansion memory
HAND SET	Handset
SDAM	SDRAM capacity
PRINTER	Printer
PRINTER MEMORY	Printer memory
HDD	Hard disk capacity
NIC	NIC
NETWORK SCANNER	Network scanner
FONT ROM	Kanji font

When installed: Each model name is displayed.

When not installed: "NONE" is displayed.

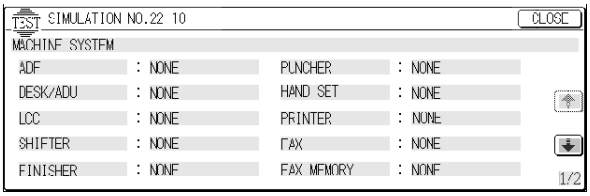

22 -12

Purpose	Adjustment/Setting/Operation data output, check (display, print)
Function (Purpose)	Used to check the misfeed positions and the number (history) of misfeed at each position. (If the misfeed count is considerably great, it may be judged as necessary to repair.)
Section	RADF Option
Item	Trouble Misfeed
Operation/ Procedure	The misfeed counter value is displayed.

The misfeed history positions in RADF are displayed with the names of sensors and detectors from the latest one. Max. 50 items of information can be stored, and the oldest one is deleted sequentially. The machine condition can be estimated according to this data.

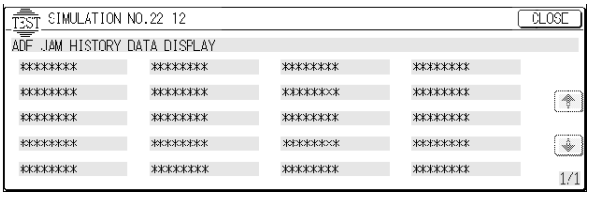

22 -13

Purpose	Adjustment/Setting/Operation data output, check (display, print)
Function (Purpose)	Used to check the process cartridge counter. (If the count number is considerably great, it may be judged as necessary for repair.)
Section	Process section
Item	Counter
Operation/ Procedure	The process counter value of the process cartridge is displayed.

(Counter values to be displayed)

Display	Content
DRUM CTRG K	Drum cartridge print counter (K)
DRUM CTRG C	Drum cartridge print counter (C)
DRUM CTRG M	Drum cartridge print counter (M)
DRUM CTRG Y	Drum cartridge print counter (Y)
DRUM RANGE K	Drum cartridge accumulated mileage time (mm) (K)
DRUM RANGE C	Drum cartridge accumulated mileage time (mm) (C)
DRUM RANGE M	Drum cartridge accumulated mileage time (mm) (M)
DRUM RANGE Y	Drum cartridge accumulated mileage time (mm) (Y)
TONER RANGE K	Toner cartridge accumulated mileage time (mm) (K)
TONER RANGE C	Toner cartridge accumulated mileage time (mm) (C)
TONER RANGE M	Toner cartridge accumulated mileage time (mm) (M)
TONER RANGE Y	Toner cartridge accumulated mileage time (mm) (Y)

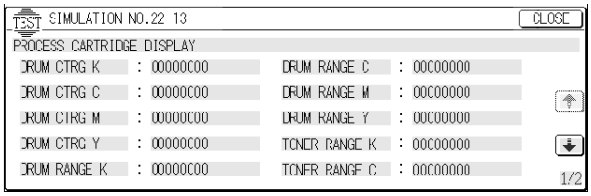

22 -19

Purpose	Adjustment/Setting/Operation data output, check (display, print)
Function (Purpose)	Used to check the counters related to the network scanner.
Section	Network scanner
Item	Counter
Operation/ Procedure	The counter values related to the network scanner are displayed.

(Counter values to be displayed)

Display	Content
NETWORK SCANNER (BW)	Network scanner document scan number counter (B/W)
NETWORK SCANNER (COL)	Network scanner document scan number counter (Color)
SCANNER E-MAIL	Scanner e-mail transmit counter
SCANNER FTP	Scanner FTP transmit counter
TRIAL MODE	Trial mode counter

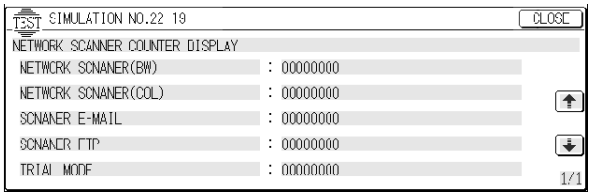

24

24 -1

Purpose	Data clear
Function (Purpose)	Used to clear the misfeed counter, the misfeed history, the trouble counter, and the trouble history. (After completion of maintenance, the counters are cleared.)
Section	Memory
Item	Counter
Operation/ Procedure	1. Select the counter to be cleared. 2. Press the [EXECUTE] key. The display for reconfirmation to clear is shown. 3. Select YES or NO to clear the counter. YES: Clear NO: Not clear

(Counter to be cleared)

Display	Content
MACHINE JAM	Machine JAM counter
RADF JAM	ADF JAM counter
TROUBLE	Trouble counter

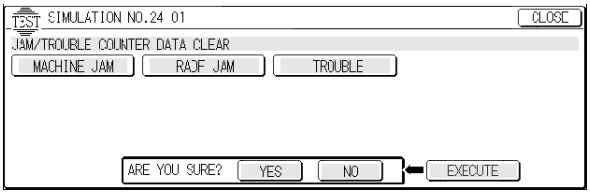

24 -2

Purpose	Data clear
Function (Purpose)	Used to clear the data of the number of uses (print quantity) of each paper feed section.
Section	Paper feed
Item	Counter — Paper feed unit
Operation/ Procedure	1. Select the counter to be cleared. (The selected key highlighted.) 2. Press the [EXECUTE] key. The display for reconfirmation to clear is shown. 3. Select YES or NO to clear the counter. YES: Clear NO: Not clear

After completion of maintenance, the following counters are cleared.

(Counters to be cleared)

MFT TOTAL	Manual paper feed (total) counter
MFT CB1	Manual paper feed (heavy paper 1) counter
MFT CB2	Manual paper feed (heavy paper 2) counter
MFT OHP1	Manual paper feed (OHP1) counter
MFT OHP2	Manual paper feed (OHP2) counter
MFT ENV	Manual paper feed (Envelope) counter
TRAY1	Tray 1 counter
TRAY2	Tray 2 counter
TRAY3	Tray 3 counter
TRAY4	Tray 4 counter
ADU	Duplex unit counter
LCC	Large capacity tray counter

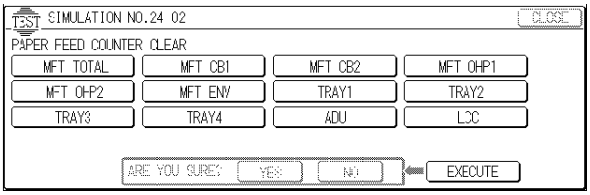

24 -3

Purpose	Data clear
Function (Purpose)	Used to clear the use number data of the staple, the RADF, and the scanner.
Section	Transport/Finisher
Item	Counter
Operation/ Procedure	1. Select the counter to be cleared. (The selected key highlighted.) 2. Press the [EXECUTE] key. The display for reconfirmation to clear is shown. 3. Select YES or NO to clear the counter. YES: Clear NO: Not clear

(Counters to be cleared)

Display	Content
MIRROR SCAN	Scan counter
RADF	ADF counter
STAPLER	Staple counter
PUNCHER	Puncher counter
INVERTER	Inverter counter

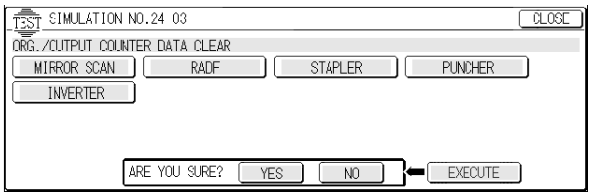

24 -4

Purpose	Data clear
Function (Purpose)	Used to reset the maintenance counter.
Item	Counter — Maintenance
Operation/ Procedure	1. Press the [EXECUTE] key. The display for reconfirmation to clear is shown. 2. Select YES or NO to clear the counter. YES: Clear NO: Not clear

(Counters to be cleared)

MAINTE (COL)	Maintenance counter (Color)
MAINTE (ALL)	Maintenance counter (Total)
BELT UNIT	Transfer unit print counter
FUSER UNIT	Fusing unit print counter

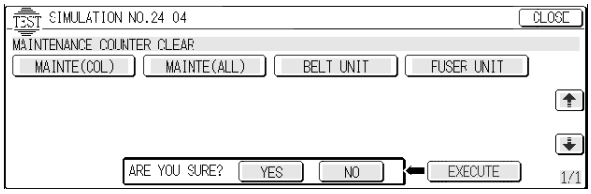

24 -6

Purpose	Data clear
Function (Purpose)	Used to clear the counters.
Item	Counter
Operation/ Procedure	1. Select the counter to be cleared. 2. Press the [EXECUTE] key. The display for reconfirmation to clear is shown. 3. Select YES or NO to clear the counter. YES: Clear NO: Not clear

(Counters to be cleared)

Display	Content
COPY BW	Copier (B/W) counter
COPY COL	Copier (Color) counter
SINGLE COLOR	Single color

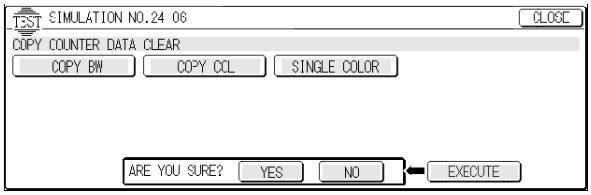

24 -7

Purpose	Data clear
Function (Purpose)	Used to clear the OPC drum (membrane decrease) correction counter. (This simulation is performed with the OPC drum is replaced.)
Section	Process (Photoconductor, developing, transfer, cleaning) Photoconductor
Item	Counter Photoconductor
Operation/ Procedure	1. Select the counter to be cleared. 2. Press the [EXECUTE] key. The display for reconfirmation to clear is shown. Select YES or NO to clear the counter. YES: Clear NO: Not clear

After replacement of the OPC drum, the following counters are cleared.

(Counters to be cleared)

Display	Content
DRUM CTRG K	Drum cartridge (K)
DRUM CTRG C	Drum cartridge (C)
DRUM CTRG M	Drum cartridge (M)
DRUM CTRG Y	Drum cartridge (Y)

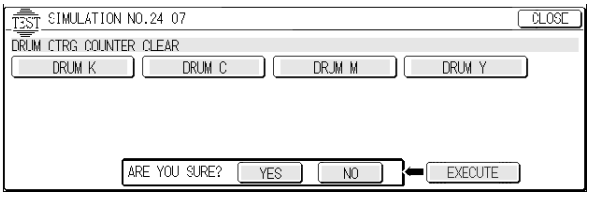

24 -8

Purpose	Data clear
Function (Purpose)	Used to clear the waste toner counter in the transfer section.
Section	Process (Photoconductor, developing, transfer, cleaning) Transfer
Item	Counter
Operation/ Procedure	1. Press the [EXECUTE] key. The display for reconfirmation to clear is shown. 2. Select YES or NO to clear the counter. YES: Clear NO: Not clear

After removing waste toner from the transfer section, the counter is cleared.

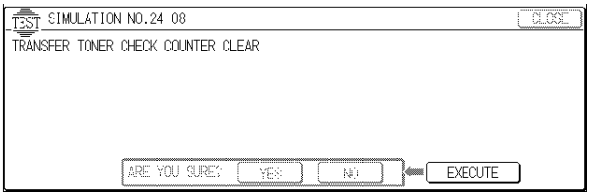

24 -9

Purpose	Data clear
Function (Purpose)	Used to clear the printer mode counter and the self-print mode print counter. (After completion of maintenance, the counters are cleared.)
Section	Printer
Item	Counter Printer
Operation/ Procedure	1. Select the counter to be cleared. 2. Press the [EXECUTE] key. The display for reconfirmation to clear is shown. 3. Select YES or NO to clear the counter. YES: Clear NO: Not clear

PRINT BW	Printer mode print counter (B/W)
PRINT COL	Printer mode print counter (Color)
OTHER BW	Self print mode print counter (B/W)
OTHER COL	Self print mode print counter (Color)

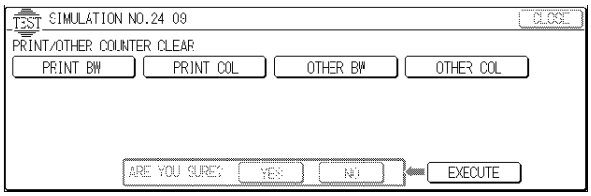

24 -15

Purpose	Data clear
Function (Purpose)	Used to clear the network scanner counter.
Section	Scanner section
Item	Counter
Operation/ Procedure	1. Select the counter to be cleared. 2. Press the [EXECUTE] key. The display for reconfirmation to clear is shown. 3. Select YES or NO to clear the counter. YES: Clear NO: Not clear

(Counters to be cleared)

NETWORK SCANNER (BW)	Network scanner document scan quantity counter (B/W)
NETWORK SCANNER (COL)	Network scanner document scan quantity counter (Color)
SCANNER E-MAIL	Scanner e-mail send counter
SCANNER FTP	Scanner FTP send counter

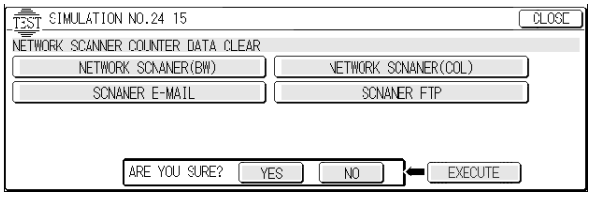

25

25 -1

Purpose	Operation test/check
Function (Purpose)	Used to check the operation of the process section (excluding the image process section) and the toner remaining quantity sensor. (The toner remaining quantity sensor output can be monitored.)
Section	Process (Photoconductor, developing, transfer, cleaning)
Item	Operation
Operation/ Procedure	1. Select the color to check the toner remaining quantity. 2. Press the [EXECUTE] key. The selected toner key is highlighted, and all the drum motors rotate (117m/s), and the specified toner remaining quantity sensor level is displayed. After 10min, the motors stop, and the [EXECUTE] key returns to the normal display.

When the [EXECUTE] key is pressed during rotation of the motors, the motors will stop and the [EXECUTE] key will return to the normal display.

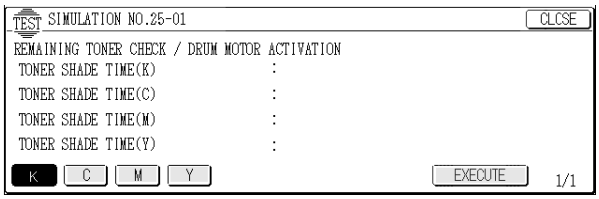

26

26 -2

Purpose	Setting
Function (Purpose)	1. Used to set the paper size of the large capacity tray. (When the paper size is changed, the software setup must be changed accordingly with this simulation.) 2. Used to detect 8.5 " x 13" (INCH Series) paper or documents and to set the display mode. (All paper feed modes) 3. Used to set the display form of the paper kind in the manual paper feed mode.
Section	Paper feed
Item	Specifications
Operation/ Procedure	1. Used to set the paper size of the large capacity tray. 2. Used to set to allow 8.5" x 13" size paper to be treated as a selectable size. 3. Used to set the paper kind display mode in the manual paper feed mode. * Documents or paper of 8.5" x 13" are treated as a selectable size.

(Selection item)

	Used unit		Destination	Set value	
				0 (Default) (Disable)	1 (Enable)
Document	AR-RF2		Japan	A4R	A4R *5
			AB series (SUK/SEEG)	A4R	A4R *5
			AB series (SCA/Others)	A4R	8.5" x 13" *3
			Inch series (SEC/SECL)	8.5" x 14"	8.5" x 14" *5
			Inch series (Others)	8.5" x 14"	8.5" x 13" *1
	Document table		Japan/EX Japan AB series	B4	8.5" x 13" *2
			Inch series	8.5" x 14"	8.5" x 13" *1
Paper	Machine	Manual paper feed tray	All destinations	8.5" x 14"	8.5" x 13" *4
		Paper feed tray	All destinations	–*6	
	AR-LC5 (LCC)		All destinations	–	

*1: An original of 8.5" x 14" is detected as 8.5" x 13".

*2: An original of B4 size is detected as 8.5" x 13".

*3: An original of A4R size is detected as 8.5" x 13".

*4: An original of 8.5" x 14" is detected as 8.5" x 13".

*5: Applicable by replacing the AR-RF2 original tray.

*6: Can be set with the key operator program.

*7: Determined by the paper type of the destination.

Item	Set value	Content
LCC	0	No size specified (Default)
	1	8.5 x 11
	2	A4
Legal (Inch series) *7	0	8.5 x 14 (Default)
	1	8.5 x 13
Legal (AB series) *7	0	B4 (Default)
	1	8.5 x 13

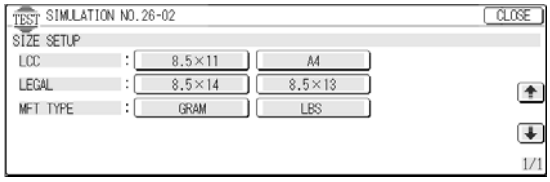

26 -3

Purpose	Setting
Function (Purpose)	Used to set the auditor specification mode. Setting must be made according to the use conditions of the auditor.
Section	Auditor
Item	Specifications
Operation/ Procedure	Enter the code number corresponding to the auditor specification mode.

Mode	Content
[P10]	Built-in auditor mode
[AR-EC1]	Card counter mode (only Japan)
[MODE1]	Coin vendor mode 1
[MODE2]	Coin vendor mode 2
[MODE3]	Coin vendor mode 3

[Copy vendor mode]

Diag setting	Specified number completed with money left	Lack of money during a copy job		Specified number completed with no money left
		BW/Color (with no money left)	Color (with money left)	
	Case 1	Case 2	Case 3	Case 4
26-3=3 MODE1	Operation 1	Operation 2	Operation 2	Operation 1
26-3=4 MODE2	Operation 1	Operation 1	Operation 2	Operation 1
26-3=5 MODE3	Operation 1	Operation 3	Operation 2	Operation 3

Operation 1: The set status remains until the auto clear set time has passed. (Default: 60sec Changeable with key operations.)

Operation 2: Auto clear is not made.

Operation 3: Setting is immediately cleared, and the display returns to the standby menu.

Case 1/Case 2 (with money left): B/W copy is allowed. If, however, charge money fro color copy is exhausted during a color copy job, when sufficient money for the job is supplied, only the color start key of the READY lamp lights up.

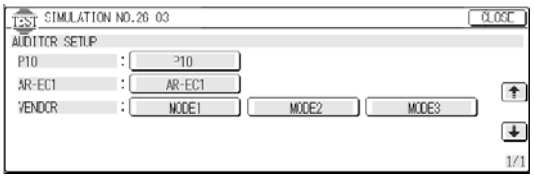

26 -5

Purpose	Setting
Function (Purpose)	Used to set the count mode of the total counter and the maintenance counter.
Item	Specifications Counter
Operation/ Procedure	Used to set the single count-up or double count-up for the total counter, the maintenance counter, and the developer counter when printing is performed with A3, 11 x 17" paper. 1. Select the kind of the counter with the scroll key. 2. Enter "1" or "2" with the 10-key pad and press the [OK] key.

Item		Content	Set range	Default
A	TOTAL(B/W)	Total counter (B/W)	1 – 2	2
B	TOTAL(COL)	Total counter (Color)	1 – 2	2
C	MAINTE(B/W)	Maintenance (B/W)	1 – 2	2
D	MAINTE(COL)	Maintenance (Color)	1 – 2	2

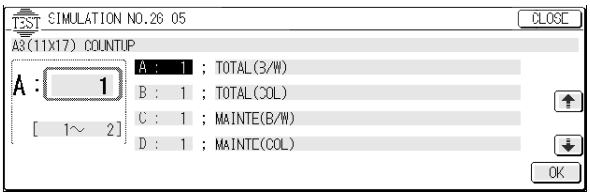

26 -6

Purpose	Setting
Function (Purpose)	Used to set the destination specifications (paper, fixed copy magnification ratios, image (process) correction, machine operation in case of an error, etc.).
Item	Specifications Destination
Operation/ Procedure	The current destination is highlighted. Select a desired destination.

(Destinations to be selected)

Destination	
U.S.A.	United States of America
Canada	Canada
Inch	Inch series, other destinations
Japan	Japan
AB_B	AB series (B5 detection), other destinations
Europe	Europe
U.K.	United Kingdom
Aus.	Australia
AB_A	AB series (A5 detection), other destinations
China	China

SIM No.	Content	U.S.A	Canada	Inch	Japan	AB_B
SIM26-02	Manual feed paper kind display	1 (LBS)	1 (LBS)	1 (LBS)	0 (GRAM)	0 (GRAM)
SIM26-02	Legal set value	0 (8.5 x 14)	0 (8.5 x 14)	0 (8.5 x 14)	0 (8.5 x 14)	0 (8.5 x 14)
SIM26-41	Center binding AMS setting	0 (No support)	0 (No support)	0 (No support)	0 (No support)	0 (No support)
SIM26-52	White paper exit count-up setting	1 (Counts up.)	1 (Counts up.)	1 (Counts up.)	0 (No counts)	1 (Counts up.)
SIM46-19	B/W auto exposure mode setting	2 (EX Japan)	2 (EX Japan)	2 (EX Japan)	1 (Japan)	2 (EX Japan)
SIM43-01A	Normal paper HL1 control temperature	175	175	175	170	170
SIM43-01B	Normal paper HL2 control temperature	140	140	140	140	140
SIM43-01C	HL1 control temperature in the ready state	170	170	170	165	165
SIM43-01F	Heavy motor 1 HL2 control temperature	136	136	136	135	135
SIM43-01Q	Fusing motor rotation start temperature in warming up	155	155	155	155	155
Key operation	Language setting	0 x 50	0 x 50	0 x 5c	0 x 51	0 x 5c
Key operation	LCC size setting	1 (8.5 x 11)	1 (8.5 x 11)	1 (8.5 x 11)	2 (A4)	2 (A4)
Key operation	Manual feed size setting	1 (8.5 x 11)	1 (8.5 x 11)	1 (8.5 x 11)	2 (A4)	2 (A4)
Key operation	Document detection setting	1 (INCH_1)	1 (INCH_1)	1 (INCH_1)	3 (AB_1)	3 (AB_1)
Key operation	Auto summer time setting	0 (Disable)	0 (Disable)	0 (Disable)	0 (Disable)	0 (Disable)
Key operation	Tray 1 special size	8.5 x 11	8.5 x 11	8.5 x 11	A4	A4
Key operation	Tray 2 special size	8.5 x 11	8.5 x 11	8.5 x 11	A4	A4
Key operation	Tray 3 special size	8.5 x 11	8.5 x 11	8.5 x 11	A4	A4
Key operation	Tray 4 special size	8.5 x 11	8.5 x 11	8.5 x 11	A4	A4

SIM No.	Content	Europe	U.K.	Aus.	AB_A	China
SIM26-02	Manual feed paper kind display	0 (GRAM)	0 (GRAM)	0 (GRAM)	0 (GRAM)	0 (GRAM)
SIM26-02	Legal set value	0 (8.5x14)	0 (8.5x14)	1 (8.5x13)	0 (8.5x14)	0 (8.5x14)
SIM26-41	Center binding AMS setting	1 (AMS setting)	1 (AMS setting)	0 (Disable)	0 (Disable)	0 (Disable)
SIM26-52	B/W paper exit count-up setting	1 (Counts up.)	1 (Counts up.)	0 (No counts)	1 (Counts up.)	1 (Counts up.)
SIM43-01A	Normal paper HL1 control temperature	175	175	175	175	175
SIM43-01B	Normal paper HL2 control temperature	140	140	140	140	140
SIM43-01C	HL1 control temperature in the ready state	170	170	170	170	170
SIM43-01F	Heavy paper 1 HL2 control temperature	136	136	136	136	136
SIM43-01Q	Fusing motor rotation start temperature in warming up	155	155	155	155	155

SIM No.	Content	Europe	U.K.	Aus.	AB_A	China
SIM46-19	B/W auto exposure mode setting	2 (EX Japan)	2 (EX Japan)	2 (EX Japan)	2 (EX Japan)	2 (EX Japan)
Key operation	Language setting	0x5c	0x5c	0x5c	0x5c	0x5b
Key operation	LCC size detection	2 (A4)	2 (A4)	2 (A4)	2 (A4)	2 (A4)
Key operation	Manual fee size setting	2 (A4)	2 (A4)	2 (A4)	2 (A4)	2 (A4)
Key operation	Document detection setting	3 (AB_1)	3 (AB_1)	4 (AB_2)	3 (AB_1)	3 (AB_1)
Key operation	Auto summer time setting	1 (Enable)	0 (Disable)	1 (Enable)	0 (Disable)	0 (Disable)
Key operation	Tray 1 special size	A4	A4	A4	A4	A4
Key operation	Tray 2 special size	A4	A4	A4	A4	A4
Key operation	Tray 3 special size	A4	A4	A4	A4	A4
Key operation	Tray 4 special size	A4	A4	A4	A4	A4

Language setup: 0x50 American English, 0x51 Japanese, 0x5c Chinese

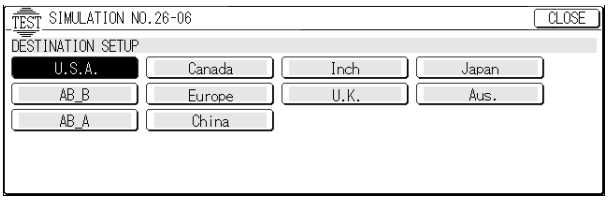

26 -10

Purpose	Setting
Function (Purpose)	Used to set the trial mode of the network scanner.
Section	Scanner
Item	Specifications
Operation/ Procedure	1. Set ON/OFF of the trial mode with the 10-key pad, and press the [OK] key. * The B/W start key or the color start key can be used instead of the [OK] key in the above procedure.

(Trial mode setting)

Item	Content	Set range	Default
A	Trial mode setting	0: NO 1: YES	0

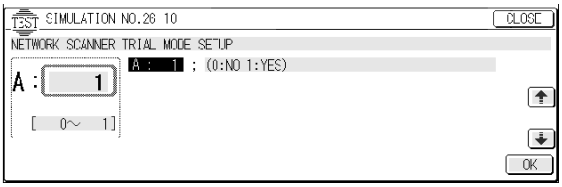

26 -18

Purpose	Setting
Function (Purpose)	Used to set YES/NO of toner save operation. (This simulation is Enable only for Japan and UK versions. It depends on SIM 26-6 (Destination) setting. For the other destinations, the same setting can be made by the user program P22. (Effective only in the monochrome copy mode)
Item	Specifications Operation mode (Common)
Operation/ Procedure	Enter the code number corresponding to the condition (the toner save YES/NO) with the 10-key and press the [OK] Key.

(Toner save mode setting)

Item		Content	Set range	Default
A	COPY (0:NO 1:YES)	Copy mode toner save mode inhibit	0:NO 1:YES	0
B	FAX (0:NO 1:YES)	FAX mode toner save mode inhibit	0:NO 1:YES	0
C	PRINTER (0:NO 1:YES)	Printer mode toner save mode inhibit	0:NO 1:YES	0

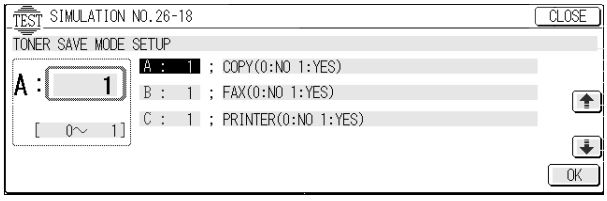

26 -35

Purpose	Setting
Function (Purpose)	Used to set whether the trouble history display by SIM 22-4 is displayed as one trouble or as the accumulated number of continuous troubles when two or more troubles of same kind occur continuously.
Item	Specifications
Operation/ Procedure	Used to set whether the trouble history display by SIM 22-4 is displayed as one trouble or as the accumulated number of continuous troubles when two or more troubles of same kind occur continuously. 1. Select the number corresponding to the display mode with the 10-key and press the [OK] key.

Item	Set value	Default
The trouble history display by SIM 22-4 is displayed as it is when two or more troubles occur continuously.	1	0
The trouble history display by SIM 22-4 is displayed as one trouble when two or more troubles occur continuously.	0	

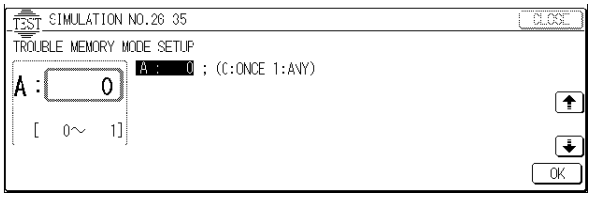

26 -38

Purpose	Setting
Function (Purpose)	Used to set "Continue/Stop" of printing when the maintenance timing (replacement timing of each consumable part) is reached.
Item	Specifications
Operation/ Procedure	When the maintenance timing (replacement timing of each consumable part) is reached, set "Continue/Stop" of printing by entering the code number with the 10-key, referring to the table below. Then press the [OK] key.

[Target item]

* Maintenance preset counter (Depending on the set value of SIM21-1.)
* Consumable part replacement timing

Transfer belt (Depending on the set value of SIM21-1.)

Fusing unit (Depending on the set value of SIM21-1.)

OPC drum

When the toner cartridge is emptied, printing is stopped regardless of this setup.

Item		Content	Set value		Default
A	(0:CONTINUE 1:STOP)	Used to set "Continue/Stop" of printing when the maintenance timing (replacement timing of each consumable part) is reached.	0	Continues printing.	0
			1	Stops printing.	

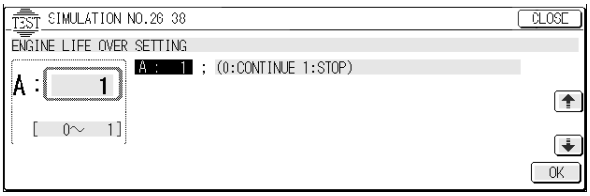

26 -41

Purpose	Setting
Function (Purpose)	Used to set Enable/Disable of AMS operation in the center-binding mode.
Item	Specifications
Operation/ Procedure	Enter the corresponding code of Enable/Disable of AMS operation in the center-binding mode with the 10-key pad, and press the [OK] key. * The B/W start key or the color start key cans be used instead of the [OK] key in the above procedure.

(Setting of AMS in the center binding mode)

Item		Content	Set value		Default
A	(0:NO 1:YES)	Setting of AMS operation in the center binding mode	0	AMS operation is disabled.	1: Europe and UK 0: Others
			1	AMS operation is enabled.	

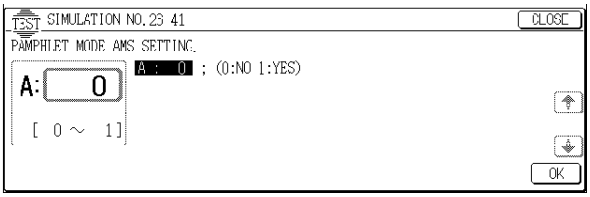

26 -52

Purpose	Setting
Function (Purpose)	Used to set YES/NO of count up of non-copy paper (cover or insertion paper).
Item	Specifications Operation mode
Operation/ Procedure	1. Enter the set value corresponding to the operation mode with the 10-key. 2. Press the [OK] key. * The B/W start key or the color start key can be used instead of the [OK] key in the above procedure.

(B/W count up setting)

Item		Content	Set value		Default
A	(0:DON'T 1:DO)	Non-copy paper count-up setting	0	Not count up.	1: Other countries 0: Japan/ Australia
			1	Counts up.	

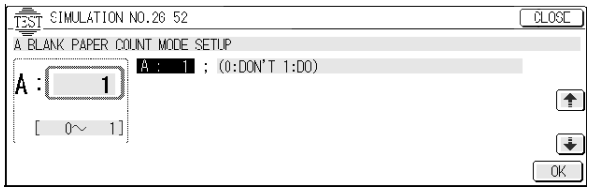

26 -53

Purpose	Setting
Function (Purpose)	Used by the user to set Enable/Disable auto color calibration (auto adjustment of color balance and density)
Item	Specifications Operation mode
Operation/ Procedure	1. Select Enable or Disable with the 10-key. Disable 0: YES Enable 1: NO 2. Press the [OK] key.

Set value	Content	Default
0	Disable auto color calibration (automatic adjustment of copy color balance and density)	1
1	Enable auto color calibration (automatic adjustment of copy color balance and density)	

When "Disable" is selected, the user program does not show the menu of the user auto color calibration (automatic adjustment of copy color balance and density).

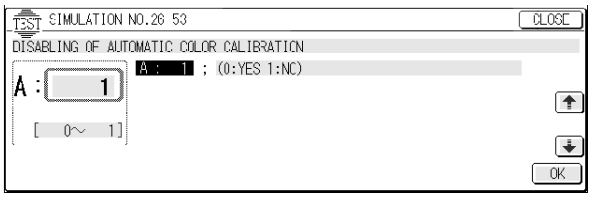

26 -57

Purpose	Setting
Function (Purpose)	Used to set the model name for use as the status information.
Item	Specifications
Operation/ Procedure	Press the corresponding key to the model name, and the model name is set and the selected key is highlighted. The model name information set in this simulation is used in the RIC/MIB system.

(For Japan)

Model	
AR-C260S	Copier model
AR-C260M	Copier/printer model
AR-C260F	Copier/FAX model
AR-C260FP	Copier/FAX/printer model

(When the destination is outside of Japan)

Model	
AR-C260	Copier model
AR-C260M	Copier/printer model

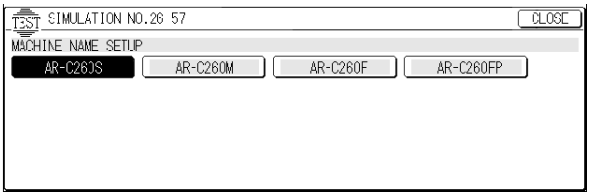

26 -65

Purpose	Setting
Function (Purpose)	Used to set the finisher alarm mode.
Item	Specifications
Operation/ Procedure	Press the key which shows the staple limit quantity. The entered number is set and the pressed key is highlighted.

Item	Content	Set value		Default
STAPLE LIMIT	Staple limit quantity	30	Staple limit quantity: 30	30
		50	Staple limit quantity: 50	

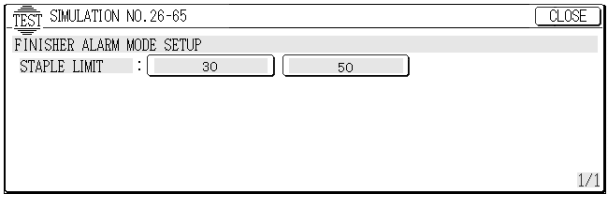

27

27 -1

Purpose	Operation test/check
Function (Purpose)	Used to set the specifications for operations in case of communication trouble between the host computer and MODEM (machine side). (When communication trouble occurs between the host computer MODEM and the machine, the self diag display (U7-00) is printed and setting for inhibition of print or not is made.)
Section	Communication (RIC/MODEM)
Item	Specifications Operation mode (Common)
Operation/ Procedure	Enter the code number corresponding to the operation mode with the 10-key and press the [OK] key. Used to set Enable/Disable of U7-00 trouble detection.

Set value	Set content	Default
0	U7-00 trouble detection is made. (Default)	0
1	U7-00 trouble detection is not made.	

0: Though a communication trouble occurs between the host computer and the MODEM (machine side), the machine is not affected.

1: When a communication trouble occurs between the host computer and the MODEM (machine side), the self diag display (U7-00) is displayed.

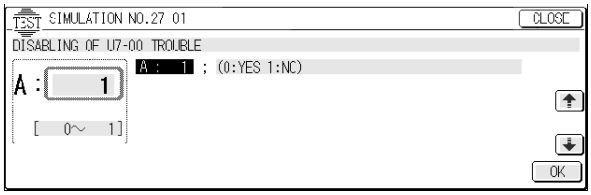

27 -5

Purpose	Setting
Function (Purpose)	Used to enter the machine tag No. (This function allows to check the tag No. of the machine with the host computer.)
Section	Communication (RIC/MODEM)
Item	Data User data
Operation/ Procedure	1. When entering the tag No. newly or changing the tag No., enter the value (max. 8 digits) with the 10-key. The entered number is displayed in the column of "NEW" 2. Press the [SET] key. The new tag No. entered in procedure 1 is set. It is advisable to enter the machine's serial No. for machine management and servicing.

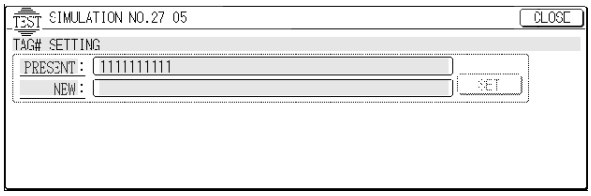

Note: To perform this setting, the host computer and the machine must be connected through MODEM.

27 -6

Purpose	Setting
Function (Purpose)	Used to set ON/OFF of service call sending to the service center by use of RIC when trouble occurred in the machine. (The service call is not sent automatically, but sent manually.)
Section	Communication (RIC/MODEM)
Item	Specifications Others
Operation/ Procedure	Enter the value corresponding to the set content and press the [OK] key. Manual service call Enable/Disable setting can be made.

Set value	Set content	Default
0	Manual service call is allowed. (Default)	0
1	Manual service call is inhibited.	

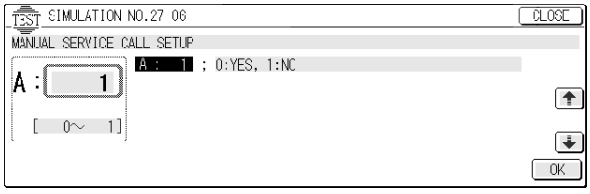

30

30 -1

Purpose	Operation test/check
Function (Purpose)	Used to check the operation of sensors and detectors in the paper feed, paper transport, paper exit sections and the related circuits.
Item	Operation
Operation/ Procedure	The active sensors and detectors are highlighted.

(Sensors to be checked)

Sensor name	Content
PFD1	Paper feed detection 1 (Tray 1)
PPD1	Transport detection 1
PPD2	Transport detection 2
POD1	Paper exit detection 1
POD2	Paper exit detection 2 (Top tray paper exit)
DSWF	Front door switch
DSWR	Right door switch
DSWL	Left door switch
FUCHin	Fusing installation detection
BELTch	Belt unit installation detection
BLUD	Belt unit upper limit detection
BTNF	Belt waste toner full detection
TFD	Side tray paper full detection
HPOS	Shifter home position detection
TFD2	Top tray paper full detection

30 -2

Purpose	Operation test/check
Function (Purpose)	Used to check the operation of sensors and detectors in the paper feed section and the related circuits. (The operation of the paper feed sensors and detectors can be monitored with the LCD display.)
Section	Paper feed
Item	Operation
Operation/ Procedure	The active sensors and detectors are highlighted.

(Sensors to be checked)

Sensor name	Content
LUD1	Paper feed tray upper limit detection (Tray 1)
PED1	Paper feed tray paper empty detection (Tray 1)
C1PD1	Paper feed tray remaining paper quantity detection (Tray 1)
C1SS1	Paper feed tray size detection 1 (Tray 1)
C1SS2	Paper feed tray size detection 2 (Tray 1)
C1SS3	Paper feed tray size detection 3 (Tray 1)
C1SS4	Paper feed tray size detection 4 (Tray 1)
MPLD1	Manual feed size length detection 1
MPLD2	Manual feed size length detection 2
MTOP1	Manual feed tray pull-out detection 1
MTOP2	Manual feed tray pull-out detection 2
MPED	Manual feed tray paper empty detection

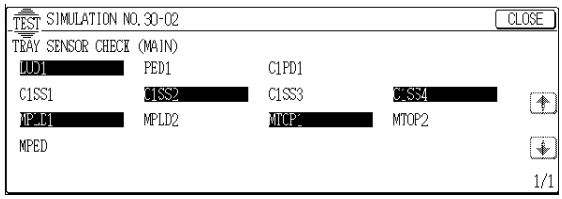

33

33 -1

Purpose	Operation test/check
Function (Purpose)	Used to check the operation of the card reader and the sensors and the related circuits. (The card reader sensor operation can be monitored with the LCD display.)
Section	Others
Item	Operation
Operation/ Procedure	Active/Inactive of the card reader is displayed.

(Sensors to be checked)

Sensor name	Content
CARD	Card insertion detection
DATA	Card number signal detection
CLOCK	Reference clock signal detection

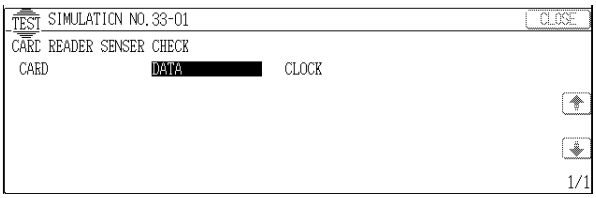

40

40 -1

Purpose	Operation test/check
Function (Purpose)	Used to check the operation of the manual feed tray paper size detector and the related circuit. (The operation of the manual feed tray paper size detector can be monitored with the LCD display.)
Section	Paper feed
Item	Operation
Operation/ Procedure	The active sensors and detectors are highlighted. Press the [CLOSE] key to terminate the simulation.

MPLD1	Manual feed size length detection 1
MPLD2	Manual feed size length detection 2
MTOP1	Manual feed tray pull-put detection 1
MTOP2	Manual feed tray pull-out detection 2

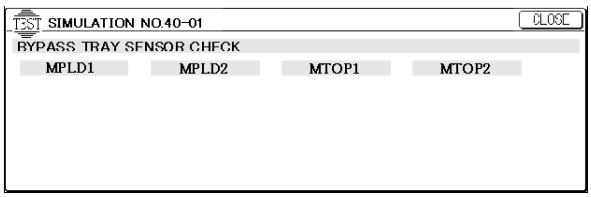

40 -2

Purpose	Adjustment
Function (Purpose)	Used to adjust the manual feed tray paper width detector detection level.
Section	Paper feed
Item	Operation
Operation/ Procedure	1. Set the manual paper feed guide to the maximum size. 2. Press the [EXECUTE] key. The [EXECUTE] key is highlighted then it returns to the normal display. The manual paper feed guide max. width position detection level is recognized. 3. Set the manual paper feed guide to A4 (11 x 8.5") size. 4. Press the [EXECUTE] key. The key is highlighted then it returns to the normal display. The manual paper feed guide A4 (11 x 8.5") detection level is recognized. 5. Set the manual paper feed guide to A4R (11 x 8.5R) size. 6. Press the [EXECUTE] key. The key is highlighted then it returns to the normal display. The manual paper feed guide A4 R (11 x 8.5"R) detection level is recognized. 7. Set the manual paper feed guide to the minimum size. 8. Press the [EXECUTE] key. The key is highlighted then it returns to the normal display. The manual paper feed guide minimum size detection level is recognized. If the above operation is not performed properly, the ERROR display is highlighted. If performed properly, the above data is stored and the COMPLETE is highlighted.

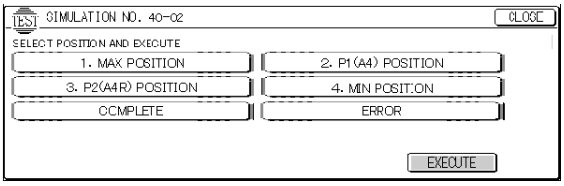

40 -7

Purpose	Setting
Function (Purpose)	Used to enter the adjustment value of the manual paper feed tray paper width detector detection level. (Setting)
Section	Paper feed
Item	Specifications
Operation/ Procedure	1. Select the item (setting) to be entered with the scroll key. 2. Enter the adjustment value with the 10-key pad. 3. Press the [OK] key.

* This simulation is not normally used. Adjustment is made with SIM 40-02.

(Set range)

Item		Set range	Default
A	MAX POSITION	0 – 255	241
B	P1 POSITION	0 – 255	231
C	P2 POSITION	0 – 255	140
D	MIN POSITION	0 – 255	19

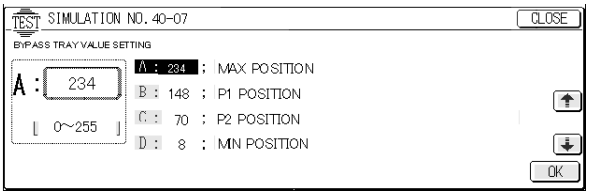

41

41 -1

Purpose	Operation test/check
Function (Purpose)	Used to check the operation of the document size sensor and the related circuit. (The operation of the document size sensor can be monitored with the LCD display.)
Section	Others
Item	Operation
Operation/ Procedure	The active sensors and detectors are highlighted.

(Sensors to be detected)

OCSW	OC cover open/close detection	Open: Highlighted, Close: Normal
PD1	Document sensor 1	No document (not detected): Normal Document loaded (detected): Highlighted
PD2	Document sensor 2	
PD3	Document sensor 3	
PD4	Document sensor 4	
PD5	Document sensor 5	
PD6	Document sensor 6	
PD7	Document sensor 7	

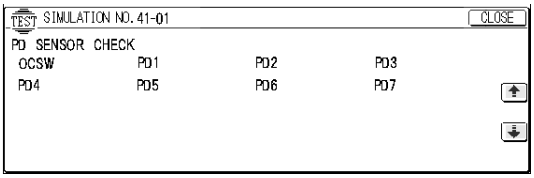

41 -2

Purpose	Adjustment
Function (Purpose)	Used to adjust the document size sensor detection level.
Section	Others
Item	Operation
Operation/ Procedure	1. Open the document table, and press the [EXECUTE] key without document on the document table. The sensor level setting with no document on the table is performed. 2. Set an A3 paper (11" x 17") and press the [EXECUTE] key. The sensor level setting with document is performed. 3. The message of completion of the adjustment is displayed.

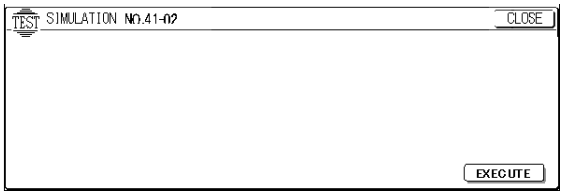

41 -3

Purpose	Operation test/check
Function (Purpose)	Used to check the operation of the document size sensor and the related circuit. (The document size sensor output level can be monitored with the LCD display.)
Section	Others
Item	Operation
Operation/ Procedure	The detection output level of each sensor (PD1 ~ PD7) is displayed in real time. * The value in [ ] shown at the right of each sensor name is the threshold value. PD1 – PD7 light receiving (A/D value) and threshold value (A/D value) range is 1 – 255. The default of the threshold value is 128.

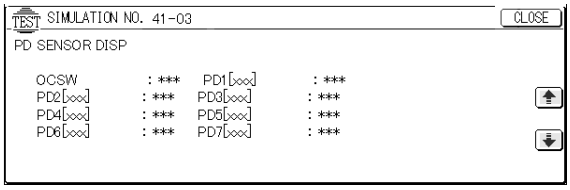

43 -1

Purpose	Setting
Function (Purpose)	Used to set the fusing temperature in each operation mode.
Section	Fixing (Fusing)
Item	Operation
Operation/ Procedure	1. Select the kind of lamps and the operation mode with the scroll key. 2. Enter the set value with the 10-key. 3. Press the [OK] key to set the fusing temperature set in procedure 2.

(Display items)

Display	Content	Set range	Default		
			100v Series	120v Series	200v Series
A	Normal paper HL1 set value	70 – 230	170	175	175
B	Normal paper HL2 set value	30 – 200	140	140	140
C	HL1 set value in ready state	70 – 230	165	170	170
D	HL2 set value in ready state	30 – 200	120	120	120
E	Heavy paper 1 HL1 set value	70 – 230	170	175	175
F	Heavy paper 1 HL2 set value	70 – 230	135	136	136
G	Heavy paper 2 HL1 set value	70 – 230	175	175	175
H	Heavy paper 2 HL2 set value	70 – 230	145	145	145
I	OHP1 HL1 set value	70 – 230	170	170	170
J	OHP1 HL2 set value	70 – 230	155	155	155
K	OHP2 HL1 set value	70 – 230	170	170	170
L	OHP2 HL2 set value	70 – 230	155	155	155
M	Envelope HL1 set value	70 – 230	180	180	180
N	Envelope HL2 set value	70 – 230	145	145	145
O	Temperature set value in pre-heating	70 – 200	143	143	143
P	Set temperature at which print is ready by heating up from the preheat mode. (Black and white copy mode)	70 – 200	165	165	165
Q	Set temperature at which the fusing motor starts rotation in warming up operation.	70 – 200	155	155	155
R	When set to “1,” the upper and the lower heat rollers are ready for print only when they reach the specified temperature. (Used when abnormal fusing occurs under low temperature environment.) When set to “0,” the operation is performed in the normal mode. That is, print is ready when the upper heat roller reaches the specified temperature.)	0 – 1	0	0	0

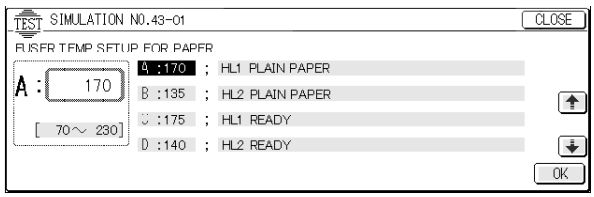

44

44 -1

Purpose	Setting
Function (Purpose)	Used to set enable/disable of correction operations in the image forming (process) section.
Section	Process (Photoconductor, developing, transfer, cleaning)
Item	Operation
Operation/ Procedure	1. Select the process item to enable the operation. 2. Press the [EXECUTE] key. (The operations of all process items must be enabled.)

(Items to be selected)

Display	Content
HV	Image forming section correction (Process correction) (High-density image density correction)
HT	Half-tone image density correction
TC	Transfer output correction
RRM	RRM speed correction
MD	Photoconductor membrane decrease (sensitivity/ potential) correction
AR	Image resist auto adjustment *1
AR CHK	Image resist auto adjustment error judgment YES/NO *2

*1: When SIM 50-20 is used to adjust the image resist to the best and the image resist adjustment is performed under the following condition automatically, the best adjustment state may be changed. To avoid this, set the adjustment item AR to Disable.

When the adjustment item AR is set to Disable (ON), the image resist adjustment is automatically performed under the following conditions.

Normally set to ON condition.

*2: When the image registration automatic adjustment operation is abnormal, it is judged as an error or not.

- After replacement of a toner cartridge
- At every 8000 copies (total of print and copy)
  (When, however, 8000 copies is reached during a job, the operation is stopped after completion of the job.)

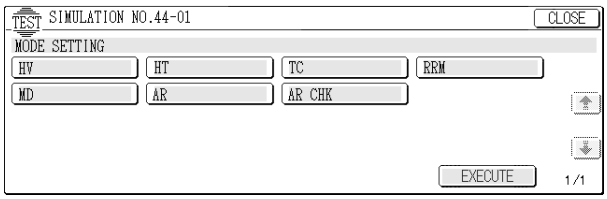

44 -2

Purpose	Adjustment
Function (Purpose)	Black image density sensor adjustment
Section	Process (Transfer)
Item	Operation
Operation/ Procedure	1. Press the [EXECUTE] key. The amplifier gain adjustment of the black image density sensor is automatically performed. After completion of the adjustment, the result is displayed and the [EXECUTE] key display returns to the original state.

(Display items)

Display		Content	Min Value	Max Value	Default value
A	PCS_C LED ADJ	Color image density sensor current adjustment value	1	255	51
B	PCS K LED ADJ	Black image density sensor LED current adjustment value	1	255	51
C	PCS_K GAIN	Black image density sensor output gain (AMP) adjustment value	0	15	0
D	PCS_K DARK	Black image density sensor dark voltage level	0	255	0
E	PCS_K GRND	Black image density sensor transfer belt surface detection level	0	255	0
F	BELTMAX	Transfer belt surface max. detection level (Black image sensor)	0	255	0
G	BELTMIN	Transfer belt surface min. detection level (Black image sensor)	0	255	0
H	BELTDIF	Difference between max. and min. of the transfer belt surface detection level (BELTmax-BELTMIN)	0	255	0

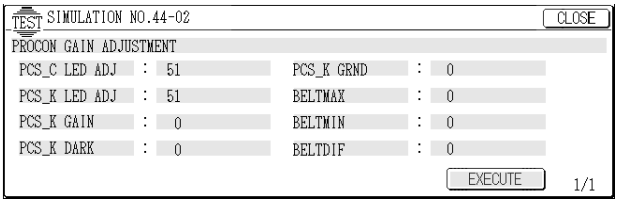

If the adjustment is not completed normally, "ERROR" is displayed.
In case of an error, the contents of the adjustment are not revised.

44 -4

Purpose	Setting
Function (Purpose)	Image forming section correction, image density sensor adjustment conditions setup
Section	Process (Photoconductor, development, transfer)
Item	Picture quality
Operation/ Procedure	1. Select the item to beg set by the scroll key. 2. Enter the set value with the 10-key, and press the [OK] key. (The entered value is set.) Set all to the default values.

(Display items)

Display		Content	Min Value	Max Value	Default value
A	PCS_C TARGET	Color image density sensor adjustment target value	1	255	108
B	PCS_K TARGET	Black image density sensor adjustment target value	1	255	201
C	LED_C OUTPUT	Initial current level in color image density sensor adjustment	1	255	51
D	LED_K OUTPUT	Initial current level in black image density sensor adjustment	1	255	51
E	PCS ADJSTMENT LIMIT	Allowable error level in adjustments	1	255	2
F	BELT GROUND DIF	Error judgment level for the belt surface detection level difference	1	255	255
G	BIAS_CL STANDARD DIF	Set value (color) of the developing basis correction start voltage difference in high density image correction	0	255	50
H	BIAS_BK STANDARD DIF	Set value (black) of the developing basis correction start voltage difference in high density image correction	0	255	75
I	BIAS PATCH INTERVAL	Patch forming developing bias voltage interval (voltage difference) in high density image correction	1	255	50
J	Y_PAT TARGET ID	Base target density level (Y) in high density image correction	1	255	88
K	M_PAT TARGET ID	Base target density level (M) in high density image correction	1	255	95
L	C_PAT TARGET ID	Base target density level (C) in high density image correction	1	255	94
M	K_PAT TARGET ID	Base target density level (K) in high density image correction	1	255	22

Display		Content	Min Value	Max Value	Default value
N	HV BK_GROUND LIMIT	Error judgment level for belt surface detection level difference (Allowable range of transfer belt surface detection level difference (mix. - min.) of black toner image patch position)	1	255	29
O	PCS_C MARKET TARGET	Adjustment target value (Color image density sensor) when adjusting the primary LED current value by using the calibration plate in SIM44-36.	1	255	120
P	PCS_C MARKET LED-REV	In SIM44-36, the toner patch density is read by three kinds of LED currents with the primary LED current adjustment value as the center value in order to obtain PCS C LED ADJ value. This is the deflection range of the current value in the above case. (Color image density sensor)	1	255	10

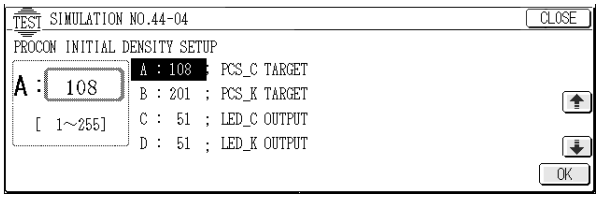

44 -6

Purpose	Operation test/check
Function (Purpose)	Used to forcibly execute the image forming section correction (high density process correction) (process correction).
Section	Process (Photoconductor, developing, transfer, cleaning)
Item	Operation
Operation/ Procedure	1. Press the [EXECUTE] key, and the image forming section correction is started. 2. If the operation is normally completed, COMPLETE is displayed and the correction result becomes valid. If the operation is not normally completed, ERROPR is highlighted and the detail of the trouble is displayed. The detail of correction can be checked with SIM 44-9 and SIM 44-12.

(Result/Detail messages list)

Result display	Content
COMPLETE	Correction is normally completed.
ERROR	An error occurred during correction. (The previous correction result is maintained.)
COMPULSORY INTERRUPTION	Compulsory interruption

Error display	Content
COLOR_SENSOR_ ADJUSTMENT_ERROR	Color image density sensor adjustment error
BLACK_GAIN_ ADJUSTMENT_ERROR	Black image density sensor gain adjustment error
BLACK_SENSOR_ ADJUSTMENT_ERROR	Black image density sensor adjustment error
BLACK_PROCON_ERROR	High-density image density correction (process correction) error (K)
CYAN_PROCON_ERROR	High-density image density correction (process correction) error (C)
MAGENTA_PROCON_ERROR	High-density image density correction (process correction) error (M)
YELLOW_PROCON_ERROR	High-density image density correction (process correction) error (Y)
CONNECTION_ERROR	Sensor-PCU PWB communication trouble

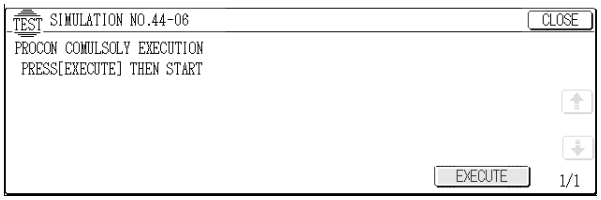

44 -9

Purpose	Adjustment/Setting/Operation data output, check (display, print)
Function (Purpose)	Used to check the data related to the image forming section correction (the corrected main charger grid voltage in each print mode, the developing bias voltage, etc.). (Used to check that correction is performed normally or not.)
Section	Process (Photoconductor, developing, transfer, cleaning)
Item	Data Operation data (Machine conditions)
Operation/ Procedure	1. By scrolling with the scroll key, each data of the image forming section correction result. can be checked.

2. [CPY/PRN] key selected: Process control mode is displayed.
   [CAD] key selected: Drawing mode is displayed. (Printer, etc.)
   [OTHER] key selected: The environment area and the number of execution of process control are displayed.

(Displayed items)

Display	Content
P (PROCON MODE)	Main charger grid voltage/developing bias voltage by high density image correction (Y, M, C, K)
N (NORMAL MODE (MIDDLE)	Actual main charger grid voltage/developing bias voltage (Normal, medium speed mode) (Y, M, C, K)
N (NORMAL MODE (LOW)	Actual main charger grid voltage/developing bias voltage (Normal, low speed mode) (Y, M, C, K)
N (NORMAL MODE (HIGH)	Actual main charger grid voltage/developing bias voltage (Normal, high-speed mode) (Y, M, C, K)
TS (TONER SAVE MODE)	Actual main charger grid voltage /Developing bias voltage (toner save high/medium/low speed mode) (K)
D (DRAWING MODE (MIDDLE)	Actual main charger grid voltage/developing bias voltage (Drawing, medium speed mode) (Y, M, C, K)

Display	Content
D (DRAWING MODE (LOW)	Actual main charger grid voltage /Developing bias voltage (drawing, low speed mode) (YMCK)
TEMP AREA	Temperature area
TEMP	Temperature (HEX value)
HUMIDITY AREA	Humidity
HUMIDITY	Humidity (HEX value)
MD X STEP (M/L/H)	Photoconductor drum membrane decrease correction step (Max. 4 steps) /Correction voltage
CONVERSION	Discrimination of Sharp version and other company version of toner cartridge (0: SHARP, 1: Other company)
DESTINATION	Destination of toner cartridge stored in the machine memory
MODEL TYPE	Toner cartridge application model (DM/AR)
CRUM DESTINATION (X)	Toner cartridge destination
DV X STEP (X)	Developing bias voltage correction step (corretion voltage) for toner cartridge life
HV	Number of corrections of high density image density
HT	Number of corrections of half-tone image density

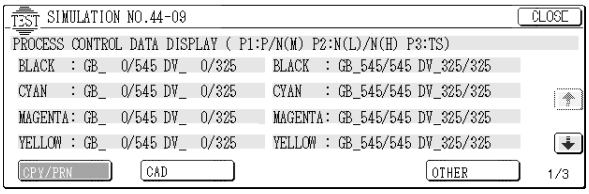

44 -12

Purpose	Adjustment/Setting/Operation data output, check (display, print)
Function (Purpose)	Used to check the sampling toner image patch density data in the image forming section correction (high-density correction) (process correction). This simulation allows to check if the correction operation is performed normally.)
Section	Process (Photoconductor, developing, transfer, cleaning)
Item	Data Operation data (Machine conditions)
Operation/ Procedure	The [TARGET] key and the [PATCH] key are used to select the display of the correction target level of each color and the toner image patch density sampling data.

(Display items)

Display	Content
CARB DATA	Color image density sensor output level when the calibration plate is detected by the basis of the color image density sensor LED current adjustment value.
ID (YMC)	Actual target density level in high density image correction
ID (K)	Actual target density level in high density image correction
n-1	Toner patch density (previous patch of nth patch data) in high density image correction (Center voltage - 50v) (n = 1 to 10))
n-2	Toner patch density (Medium patch of nth patch data) in high density image correction (Center voltage) (n = 1 to 10))
n-3	Toner patch density (following patch of nth patch data) in high density image correction (Center voltage + 50v) (n = 1 to 10))

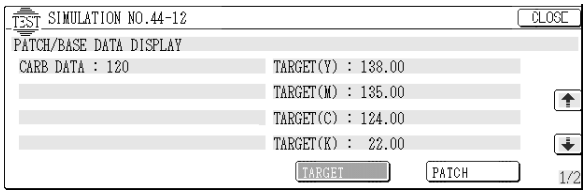

44 -13

Purpose	Adjustment
Function (Purpose)	Color image density sensor adjustment (Adjustment by the adjustment jig)
Section	Process (Transfer)
Operation/ Procedure	1. Open the front cover of the machine. 2. Install the color image density sensor adjustment jig to the transfer unit frame, and close the left cabinet. 3. With the front cover of the machine open (cover open/close switch OFF), turn on the power. 4. Enter the SIM44-13 mode. 5. Close the front cover of the machine. 6. Press the [EXECUTE] key. Adjustment is performed automatically. After completion of adjustment, the result is displayed and the [EXECUTE] key display returns to the original state. 7. Remove the color image density sensor adjustment jig.

(Set items)

Display		Content	Min Value	Max Value	Default value
A	PCS_C CARB ADJ	Color image density sensor LED current adjustment target value	1	255	108
B	PCS_C DARK	Color image density sensor dark voltage level	0	255	0
C	PCS_C LED ADJ	Color image density sensor current adjustment value	1	255	51

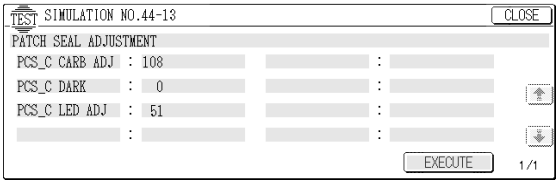

If the adjustment is not completed normally, "ERROR" is displayed. In case of an error, the contents of the adjustment are not revised.

44 -14

Purpose	Adjustment/Setting/Operation data output, check (display, print)
Function (Purpose)	Used to monitor the output level of the fusing temperature sensor, the machine temperature sensor, and the humidity sensor.
Section	Others
Operation/ Procedure	The fusing temperature, the fusing thermistor temperature, and the machine temperature and humidity are displayed.

(Display items)

Display	Content
FUSER TEMPERATURE CHECK HL1	Fusing temperature display Upper (Temperature/AD value)
FUSER TEMPERATURE CHECK HL2	Fusing temperature display Lower (Temperature/AD value)

Display	Content
PROCESS TEMPERATURE	Image process correction temperature sensor temperature display (Temperature/AD value)
PROCESS HUMIDITY	Image process correction humidity sensor humidity display (Relative humidity/AD value)

When the value exceeds the detection range, "-" is displayed.

Developing temperature: -20.0 to 40.0
Humidity: 0.0 to 99.9
Board temperature: -20.0 to 80.0

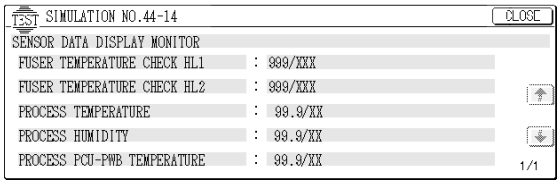

44 -21

Purpose	Setting
Function (Purpose)	Used to store color balance adjustment data. (Half tone image correction initial setting) (After execution of color balance adjustment with SIM 46-21, this simulation must be executed.)
Section	Picture quality
Operation/ Procedure	1. Press the [EXECUTE] key, and it is highlighted and the operation of color balance adjustment data (half-tone correction initial data) storing is started. After completion of the execution, the [EXECUTE] key returns to the normal display * In case of an error in the above operation, "ERROR" is displayed and the color balance adjustment data (half-tone initial data) are not stored.

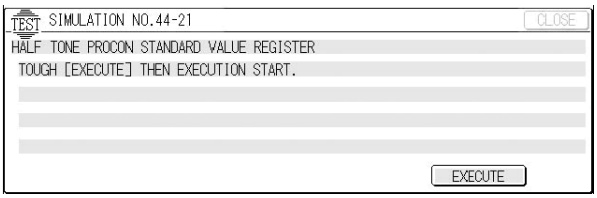

44 -22

Purpose	Adjustment/Setting/Operation data output, check (display, print)
Function (Purpose)	Used to check each color toner patch image density UITU in half tone image forming section correction (process correction). (This simulation allows to check if correction operation is performed normally.)
Section	Process (Photoconductor, developing, transfer, cleaning)
Item	Data Operation data (Machine conditions)
Operation/ Procedure	The toner image patch density data in half-tone correction are displayed. [1ST STEP]: The toner image patch density sampling data in the 1ST STEP are displayed. [2ND STEP]: The toner image patch density sampling data in the 2ND STEP are displayed.

(Display items)

Display	Content
1ST STEP	Correction operation 1ST STEP toner image patch density detection level (n=1 – 5)
2ND STEP	Correction operation 2ND STEP toner image patch density detection level (n=1 – 16)

ID-n	PTK/GND	PTC	PTM	PTY
	Black image patch density detection level/Transfer belt element detection level	Cyan image patch density detection level	Magenta image patch density detection level	Yellow image patch density detection level

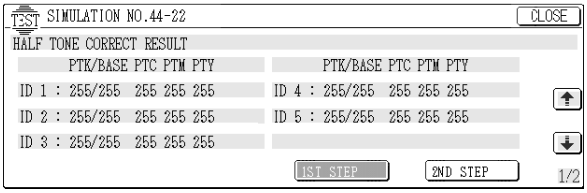

44 -24

Purpose	Adjustment/Setting/Operation data output, check (display, print)
Function (Purpose)	Used to check the half tone correction result. (This simulation allows to check if correction is executed properly or not.)
Section	Process (Photoconductor, developing, transfer, cleaning)
Item	Data Operation data (Machine conditions)
Operation/ Procedure	1. Select a page with the scroll key. 2. Select the color mode with [K], [C], [M], and [Y] keys.

3. When [NEXT] key is pressed repeatedly, the display changes from Coefficient to Reference Value then to Correction Value in this sequence.

- When the displayed item is not yet executed, "-" is displayed. In case of an error, "ERR" is displayed.
- For the reference value and the correction value, an error display is not made, but the previous value is displayed.

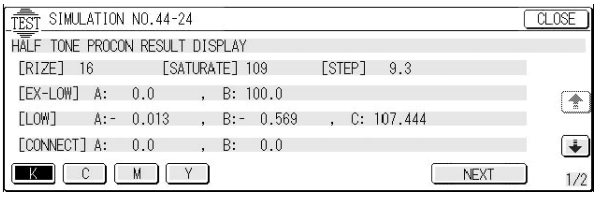

44 -25

Purpose	Adjustment/Setting/Operation data output, check (display, print)
Function (Purpose)	Setting the half tone correction conditions.
Section	Process (Photoconductor, developing, transfer, cleaning)
Item	Data Operation data (Machine conditions)
Operation/ Procedure	1. Select the color mode with [K], [C], [M], and [Y] keys. 2. Select the set item with the scroll key.

3. Enter the set value with the 10-key and press the [OK] key to store the set value.

Note: Do not set to other value than the default.

(Items to be set)

	Item	Default setting value	Set range	Content
A	1ST PATCH	40	0 – 255	Half-tone process control 1st step 1st patch print gradation
B	2ND PATCH	60	0 – 255	Half-tone process control 1st step 2nd patch print gradation

Item		Default setting value	Set range	Content
C	3RD PATCH	80	0 – 255	Half-tone process control 1st step 3rd patch print gradation
D	4TH PATCH	100	0 – 255	Half-tone process control 1st step 4th patch print gradation
E	5TH PATCH	255	0 – 255	Half-tone process control 1st step 5th patch print gradation

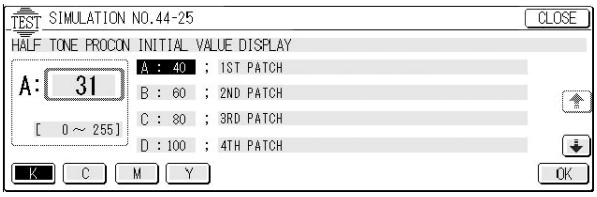

44 -26

Purpose	Adjustment
Function (Purpose)	Used to execute half tone correction compulsorily.
Section	Process (Photoconductor, developing, transfer, cleaning)
Item	Picture quality
Operation/ Procedure	1. Press the [EXECUTE] key, and it is highlighted. The half tone correction is started. When the compulsory execution is completed, the [EXECUTE] key returns to the normal display. ∗ In the case of abnormal completion, ERROR is displayed and the correction data are not stored.

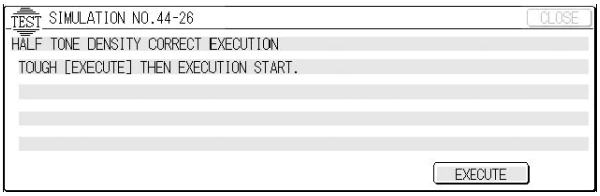

44 -27

Purpose	Data clear
Function (Purpose)	Used to clear the half tone correction data and set to the default level.
Section	Process (Photoconductor, developing, transfer, cleaning)
Item	Data
Operation/ Procedure	1. Press the [EXECUTE] key. The [YES] and [NO] keys become active. 2. Press the [YES] key, and the half tone correction data is set to the default level. (If the [NO] key is pressed, it is canceled.)

∗ After replacement of the OPC drum, be sure to execute this simulation.

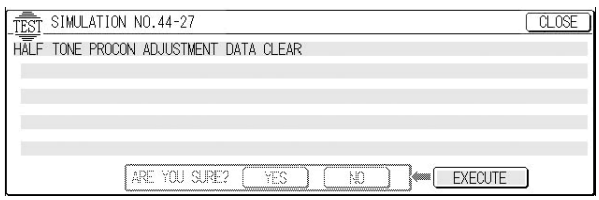

44 -36

Purpose	Adjustment
Function (Purpose)	Color image density sensor and black image density sensor adjustment (simple adjustment)
Section	Process (Transfer)
Operation/ Procedure	1. Enter the SIM44-36 mode. 2. Press the [EXECUTE] key. Adjustment is performed automatically. After completion of adjustment, the result is displayed and the [EXECUTE] key display returns to the original state. SIM44-36 is used to adjust both the color image density sensor and the black image density sensor.

(Adjustment items)

Display	Content	Min Value	Max Value	Default value
PCS_C CARB ADJ	Color image density sensor LED current adjustment target value	1	255	108
PCS_C DARK	Color image density sensor dark voltage level	0	255	0
PCS_C LED ADJ	Color image density sensor current adjustment value	1	255	51
PCS K LED ADJ	Black image density sensor LED current adjustment value	1	255	51
PCS_K GAIN	Black image density sensor output gain (AMP) adjustment value	0	15	0
PCS_K DARK	Black image density sensor dark voltage level	0	255	0
PCS_K GRND	Black image density sensor transfer belt surface detection level	0	255	0
BELTMAX	Transfer belt surface max. detection level (Black image sensor)	0	255	0
BELTMIN	Transfer belt surface min. detection level (Black image sensor)	0	255	0
BELTDIF	Difference between the max. value and the min. value of transfer belt surface detection level (BELTMAX-BELTMIN)	0	255	0

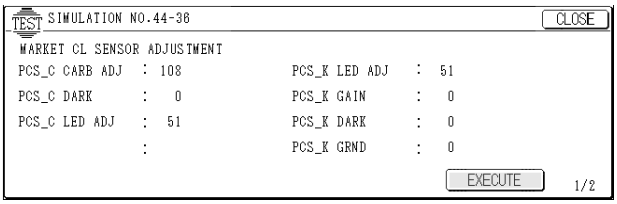

If the adjustment is not completed normally, "ERROR" is displayed. In case of an error, the contents of the adjustment are not revised.

(NOTE)

If the adjustment jig is not available, use the simple adjustment (SIM44-36). Depending on the machine conditions, however, the adjustment accuracy is insufficient. Carefully note that.

If toner, the OPC drum, and the transfer belt are not new ones or almost new ones, use of the simple adjustment method is not recommendable.

Though the machine conditions are so well as to use the simple adjustment (without the adjustment jig), it is better to perform the adjustment by using the adjustment jig for higher adjustment accuracy.

After the color image density sensor adjustment (adjustment by the adjusting jig) with SIM44-13, do not execute SIM44-36 unnecessarily.

If SIM44-36 is executed, the contents of the color image density sensor adjustment (adjustment by the adjustment jig) are erased and the adjustment result of SIM44-36 are saved.

When the color image density sensor adjustment is executed with SIM44-13 and the black image density sensor adjustment is executed with SIM44-2, there is no need to execute the adjustment with SIM44-36.

To adjust the black image density sensor, the adjustment jig is not required.

46

46 -1

Purpose	Adjustment
Function (Purpose)	Used to adjust the copy density of each color copy mode in the low-density area. The copy densities of all colors in the low-density area are changed.
Section	Process (Photoconductor, developing, transfer, cleaning)
Item	Picture quality Density
Operation/ Procedure	1. Select the copy mode for copy density adjustment with the scroll key. 2. Enter the set value with the 10-key and press the [OK] key, and the set value is stores.

(Items to be set)

Display		Copy mode (Color)	Min. Value	Max. Value	Default
A	AUTO	Auto (Auto document kind recognition, auto exposure)	1	99	50
B	TEXT	Text	1	99	50
C	TEXT/PRINTED PHOTO	Text/Printed photo	1	99	50
D	TEXT/PHOTO	Text/ Photograph	1	99	50
E	PRINTED PHOTO	Printed photo	1	99	50
F	PHOTOGRAPH	Photograph	1	99	50
G	MAP	Map	1	99	50
H	TEXT (COPY TO COPY)	Text (Copy document)	1	99	50
I	TEXT/PRINTED PHOTO (COPY TO COPY)	Text/Print (Copy document)	1	99	50
J	PRINTED PHOTO (COPY TO COPY)	Printed photo	1	99	50
K	TEXT (COLOR TONE ENHANCEMENT)	Text (Color emphasis)	1	99	50
L	TEXT/PRINTED PHOTO (COLOR TONE ENHANCEMENT)	Text/Print (Color emphasis)	1	99	50
M	TEXT/PHOTO (COLOR TONE ENHANCEMENT)	Color/ Photograph (Color emphasis)	1	99	50
N	PRINTED PHOTO (COLOR TONE ENHANCEMENT)	Prided photo (Color emphasis)	1	99	50
O	PHOTOGRAPH (COLOR TONE ENHANCEMENT)	Photograph (Color emphasis)	1	99	50
P	MAP (COLOR TONE ENHANCEMENT)	Map (Color emphasis)	1	99	50
Q	SINGLE COLOR	Single color	1	99	50
R	SINGLE COLOR (COPY TO COPY)	Single color (Copy document)	1	99	50

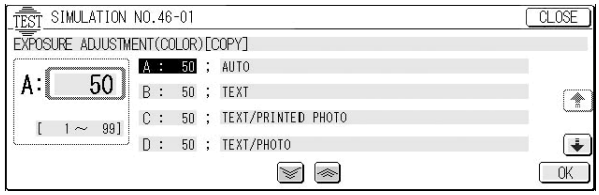

46 -2

Purpose	Adjustment
Function (Purpose)	Used to adjust the copy density of the low-density area in each monochrome copy mode. The copy density of the low-density area is changed.
Section	Process (Photoconductor, developing, transfer, cleaning)
Item	Picture quality Density
Operation/ Procedure	1. Select the copy mode for copy density adjustment with the scroll key. 2. Enter the set value with the 10-key and press the [OK] key, and the entered value is set.

(Items to be set)

Display		Copy mode (Color)	Min. Value	Max. Value	Default
A	AUTO1 (*1)	Auto 1 (Japan)	1	99	50
B	AUTO2 (*2)	Auto 2 (Except Japan)	1	99	50
C	TEXT	Text	1	99	50
D	TEXT/PRINTED PHOTO	Text/Printed photo	1	99	50
E	TEXT/PHOTO	Text/Photograph	1	99	50
F	PRINTED PHOTO	Printed photo	1	99	50
G	PHOTOGRAPH	Photograph	1	99	50
H	MAP	Map	1	99	50
I	TEXT (COPY TO COPY)	Text (Copy document)	1	99	50
J	TEXT/PRINTED PHOTO (COPY TO COPY)	Text/Printed photo (Copy document)	1	99	50
K	PRINTED PHOTO (COPY TO COPY)	Printed photo (Copy document)	1	99	50

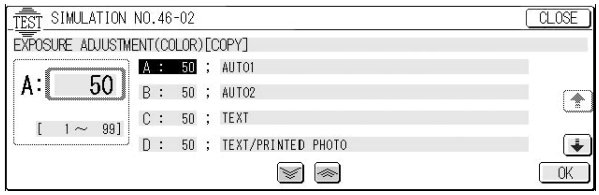

46 -4

Purpose	Adjustment
Function (Purpose)	Used to adjust the image density (color mode) in the network scan mode.
Section	Scanner (reading)
Item	Picture quality Density
Operation/ Procedure	1. Select the scan mode with the scroll key. 2. Enter the adjustment value with the 10-key and press the [OK] key, and the entered value is set. The adjustment result is valid only for the network scan mode.

(Items to be set)

Display		Network scan color mode	Min. Value	Max. Value	Default
A	TEXT	Text	1	99	50
B	TEXT/PRINTED PHOTO	Text/Printed photo	1	99	50
C	TEXT/PHOTO	Text/Photograph	1	99	50
D	PRINTED PHOTO	Printed photo	1	99	50
E	PHOTOGRAPH	Photograph	1	99	50
F	MAP	Map	1	99	50

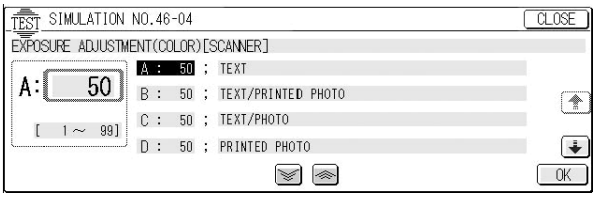

46 -5

Purpose	Adjustment
Function (Purpose)	Used to adjust the image density (monochrome mode) in the network scan mode.
Section	Scanner (reading)
Item	Picture quality Density
Operation/ Procedure	1. Select the scan mode with the scroll key. 2. Enter the adjustment value with the 10-key and press the [OK] key, and the entered value is set. The adjustment result is valid only for the network scan mode.

(Items to be set)

Display		Network scan monochrome mode	Min. Value	Max. Value	Default
A	AUTO TEXT	Text (Auto)	1	99	50
B	AUTO TEXT/PRINT PHOTO	Text/Printed photo (Auto)	1	99	50
C	AUTO TEXT/PHOTO	Text/Photograph (Auto)	1	99	50
D	TEXT	Text	1	99	50
E	TEXT/PRINTED PHOTO	Text/Printed photo	1	99	50
F	TEXT/PHOTO	Text/Photograph	1	99	50
G	PRINTED PHOTO	Printed photo	1	99	50
H	PHOTOGRAPH	Photograph	1	99	50
I	MAP	Map	1	99	50

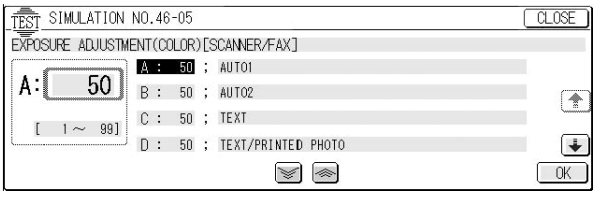

46 -6

Purpose	Adjustment
Function (Purpose)	1) Used to set the CCD black level offset level. 2) Used to set the CCD white level gain.
Section	Scanner (reading)
Item	Picture quality
Operation/ Procedure	Only one color button can be selected. The selected key is highlighted. (Default: [B]) 1. Select the color to be adjusted with the color key (K/C/M/Y). 2. Select the copy mode for the copy density adjustment with the scroll key. 3. Select the color mode with the color key (RGB). (The currently set adjustment value is displayed.) 4. Enter the set value with the 10-key and press the [OK] key, and the entered value is set.

Set the following set value.

Display		Content	Min. Value	Max. Value	Default
A	GAIN EVEN	Gain adjustment start value (Even number)	0	255	0
B	GAIN ODD	Gain adjustment start value (Odd number)	0	255	0
C	BLACK LEVEL	Output black level	0	255	32
D	AD INPUT	Analog IC function control	0	31	2

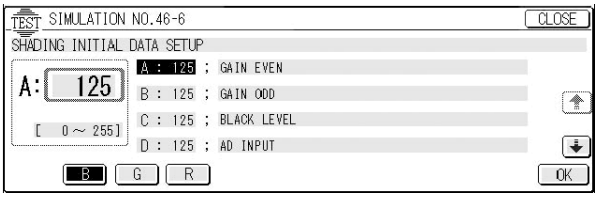

46 -10

Purpose	Adjustment
Function (Purpose)	Used to adjust the copy color balance (color) (copy document mode) (gamma/density adjustment for each color)
Section	Image process (ICU)
Item	Picture quality Color balance
Operation/ Procedure	1. Select the color to be adjusted with the color key (K/C/M/Y). 2. Select the adjustment point with the scroll key. 3. Enter the adjustment value of the selected point with the 10-key and press the [OK] key. (The entered value is set.) When the [EXECUTE] key is pressed, the color balance adjustment check pattern corresponding to the entered adjustment value is printed.

(Items to be set)

Display		Min. Value	Max. Value	Default
A	POINT1	245	755	500
↓	↓	↓	↓	↓
O	POINT15	245	755	500

Common to KCMY.

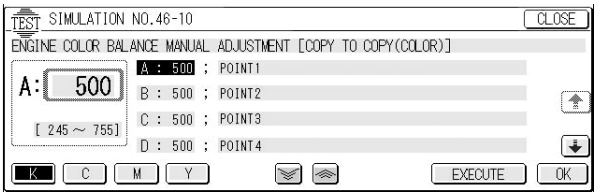

46 -11

Purpose	Adjustment
Function (Purpose)	Used to adjust the copy color balance (color) (text mode/ map mode) (gamma/density adjustment for each color)
Section	Image process (ICU)
Item	Picture quality Color balance
Operation/ Procedure	1. Select the color to be adjusted with the color key (K/ C/M/Y). 2. Select the adjustment point with the [2], [4] keys. 3. Enter the adjustment value of the selected point with the 10-key and press the [OK] key. (The entered value is set.)

When the [EXECUTE] key is pressed, the color balance adjustment check pattern corresponding to the entered adjustment value is printed.

(Items to be set)

Display		Min. Value	Max. Value	Default
A	POINT1	245	755	500
↓	↓	↓	↓	↓
O	POINT15	245	755	500

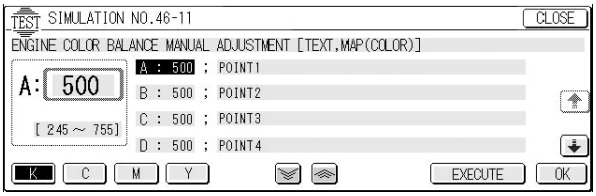

46 -12

Purpose	Adjustment
Function (Purpose)	Used to adjust the copy color balance (color) (text/ printed photo mode/Photograph mode) (gamma/density adjustment for each color)
Section	Image process (ICU)
Item	Picture quality Color balance
Operation/ Procedure	1. Select the color to be adjusted with the color key (K/ C/M/Y). 2. Select the adjustment point with the scroll key. 3. Enter the adjustment value of the selected point with the 10-key and press the [OK] key. (The entered value is set.)

When the [EXECUTE] key is pressed, the color balance adjustment check pattern corresponding to the entered adjustment value is printed.

(Items to be set)

Display		Min. Value	Max. Value	Default
A	POINT1	245	755	500
↓	↓	↓	↓	↓
O	POINT15	245	755	500

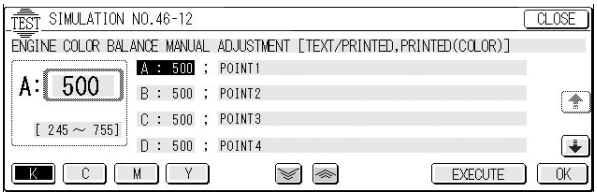

46 -13

Purpose	Adjustment
Function (Purpose)	Used to adjust the copy color balance (color) (photograph mode) (gamma/density adjustment for each color)
Section	Image process (ICU)
Item	Picture quality Color balance
Operation/ Procedure	1. Select the color to be adjusted with the color key (K/ C/M/Y). 2. Select the adjustment point with the scroll key. 3. Enter the adjustment value of the selected point with the 10-key and press the [OK] key. (The entered value is set.)

When the [EXECUTE] key is pressed, the color balance adjustment check pattern corresponding to the entered adjustment value is printed.

(Items to be set)

Display		Min. Value	Max. Value	Default
A	POINT1	245	755	500
↓	↓	↓	↓	↓
O	POINT15	245	755	500

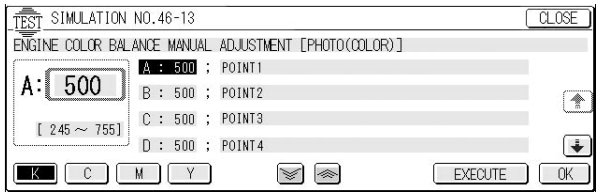

46 -14

Purpose	Adjustment
Function (Purpose)	Used to adjust the copy color balance (color) (text/ photograph mode) (gamma/density adjustment for each color)
Section	Image process (ICU)
Item	Picture quality Color balance
Operation/ Procedure	1. Select the color to be adjusted with the color key (K/ C/M/Y). 2. Select the adjustment point with the scroll key. 3. Enter the adjustment value of the selected point with the 10-key and press the [OK] key. (The entered value is set.)

When the [EXECUTE] key is pressed, the color balance adjustment check pattern corresponding to the entered adjustment value is printed.

(Items to be set)

Display		Min. Value	Max. Value	Default
A	POINT1	245	755	500
↓	↓	↓	↓	↓
O	POINT15	245	755	500

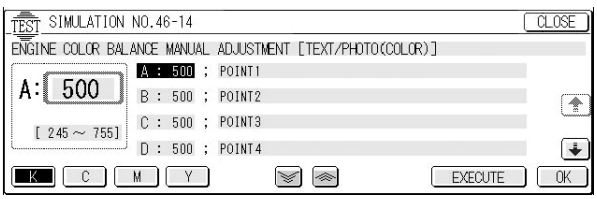

46 -15

Purpose	Adjustment
Function (Purpose)	Used to adjust the gamma and density. (Monochrome mode)
Section	Image process (ICU)
Item	Picture quality Density
Operation/ Procedure	1. Select the adjustment point with the scroll key. 2. Enter the adjustment value of the selected point with the 10-key and press the [OK] key. (The entered value is set.)

(Items to be set)

Display		Min. Value	Max. Value	Default
A	POINT1	245	755	500
↓	↓	↓	↓	↓
O	POINT15	245	755	500

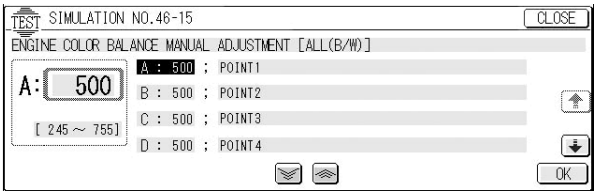

46 -16

Purpose	Adjustment
Function (Purpose)	Used to adjust the gamma and density. (Monochrome mode) (The adjustment check pattern is printed.)
Section	Image process (ICU)
Item	Picture quality Density
Operation/ Procedure	1. Select the adjustment point with the scroll key. 2. Enter the adjustment value of the selected point with the 10-key and press the [OK] key. (The entered value is set.) When the [EXECUTE] key is pressed, the color balance adjustment check pattern corresponding to the entered adjustment value is printed.

(Items to be set)

Display		Min. Value	Max. Value	Default
A	POINT1	245	755	500
↓	↓	↓	↓	↓
O	POINT15	245	755	500

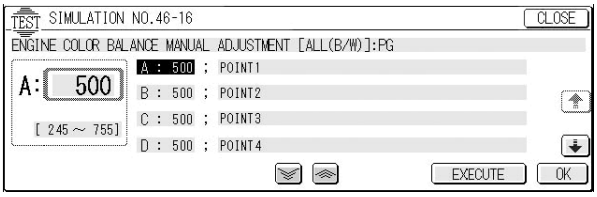

46 -19

Purpose	Adjustment
Function (Purpose)	Used to select the half-tone density (gamma) in the auto exposure mode and to set the auto exposure operation mode.
Section	Image process (ICU)
Item	Picture quality Color balance
Operation/ Procedure	1. Set the half-tone density (Gamma) with the [MODE1] key and the [MODE2] key. 2. Set the auto exposure operation mode with [ON] / [OFF]key.

Display	Set mode	Content	Destination	Default
AE MODE	MODE 1 (AUTO 1)	The half-tone density is higher than that of AUTO 2 mode.	Japan	Japan: MODE 1 (AUTO 1) Except Japan: MODE 2 (AUTO 2)
	MODE 2 (AUTO 2)	The half-tone density is lower than that of AUTO 1 mode.	Except Japan	

Display	Set mode	Content	Default
AE STOP MODE	OFF	Auto density (exposure) control is performed in real time. (The density level is changed in real time according to the document pattern.)	OFF
	ON	The density at the tip of a document is scanned, and the overall density (exposure) level is determined according to the density at the tip. (The overall density level is fixed.)	

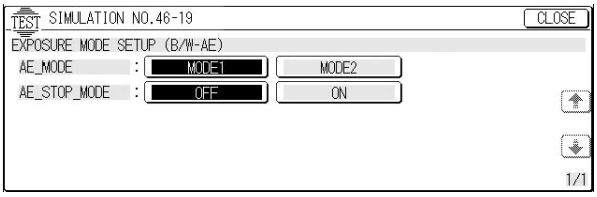

46 -20

Purpose	Adjustment
Function (Purpose)	Used to adjust copy color balance (All color copy mode gamma/density adjustment) (All color copy mode color balance/gamma/density are changed.) Same as SIM 46-21, however, printing is not performed.
Section	Image process (ICU)
Item	Picture quality Color balance
Operation/ Procedure	1. Select the color to be adjusted with the color key (K/C/M/Y). 2. Select the adjustment point with the scroll key. 3. Enter the adjustment value of the selected point with the 10-key and press the [OK] key. (The entered value is set.)

(Items to be set)

Display		Min. Value	Max. Value	Default
A	POINT1	245	755	500
↓	↓	↓	↓	↓
O	POINT15	245	755	500

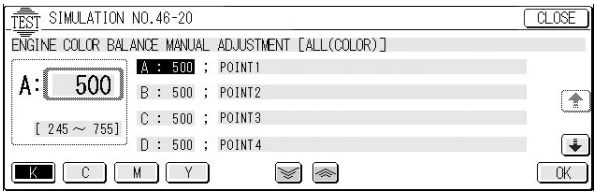

46 -21

Purpose	Adjustment
Function (Purpose)	Used to adjust copy color balance (All color copy mode gamma/density adjustment) (All color copy mode color balance/gamma/density are changed.)
Section	Image process (ICU)
Item	Picture quality Color balance

Operation/ Procedure	1. Select the color to be adjusted with the color key (K/C/M/Y). 2. Select the adjustment point with the scroll key. 3. Enter the adjustment value of the selected point with the 10-key and press the [OK] key. (The entered value is set.) When the [EXECUTE] key is pressed, the color balance adjustment check pattern corresponding to the entered adjustment value is printed.

(Items to be set)

Display		Min. Value	Max. Value	Default
A	POINT1	245	755	500
↓	↓	↓	↓	↓
O	POINT15	245	755	500

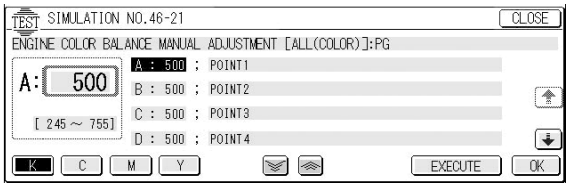

46 -23

Purpose	Setting
Function (Purpose)	Used to set Enable/Disable of half-tone high-density correction.
Item	Picture quality — Color balance
Operation/ Procedure	[ENABLE]: Correction is enabled. [DISABLE]: Correction is disabled. Default set: DISABLE

When tone gap occurs in the high density area in the photo copy mode, set this function to ENABLE, and the max. density level will fall, reducing tone gap.

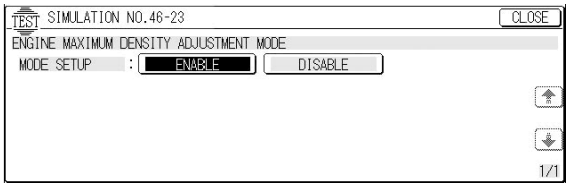

46 -24

Purpose	Adjustment
Function (Purpose)	Used to adjust the copy color balance automatically. (All color copy mode gamma/density adjustment)
Item	Picture quality — Color balance
Operation/ Procedure	1. Press the [EXECUTE] key. (A3 or 11 x 17 paper is automatically selected.) The color patch image (adjustment pattern) is printed.

2. Set the color patch image printed in procedure 1 on the document table.
3. Press the FACTORY key on the operation panel, and press the [EXECUTE] key.
   The copy color balance adjustment (step 1) is automatically performed and the color balance check patch image is printed.
4. Press the REPEAT key on the operation panel.
5. Press the [EXECUTE] key.
   The color patch image (adjustment pattern) is printed.
6. Set the color patch image (adjustment pattern) printed in procedure 5 on the document table. (Place the darker patch on the left side.)
7. Press the FACTORY key on the operation panel, and press the [EXECUTE] key.
   The copy color balance adjustment (step 2) is automatically performed and the color balance check patch image is printed.
8. Press the [OK] key on the operation panel.

The initial setting of the half-tone image correction is performed according to this adjustment data.

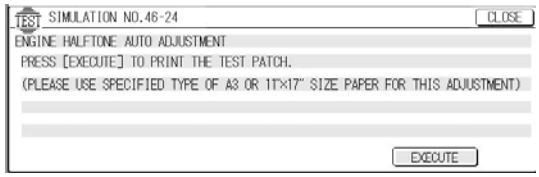

46 -25

Purpose	Adjustment
Function (Purpose)	Used to adjust copy color balance (Single color mode)
Section	Image process (ICU)
Item	Picture quality — Color balance
Operation/ Procedure	1. Select the color to be adjusted with the color key (C/M/Y). 2. Select the adjustment point with the scroll key. 3. Enter the adjustment value of the selected point with the 10-key and press the [OK] key. (The entered value is set.)

(Items to be set)

Display		Content	Min. Value	Max. Value	Default		
					C	M	Y
A	COLOR1	RED	0	255	0	255	255
B	COLOR2	GREEN	0	255	255	0	255
C	COLOR3	BLUE	0	255	255	255	0
D	COLOR4	YELLOW	0	255	0	0	255
E	COLOR5	MAGENTA	0	255	0	255	0
F	COLOR6	CYAN	0	255	255	0	0

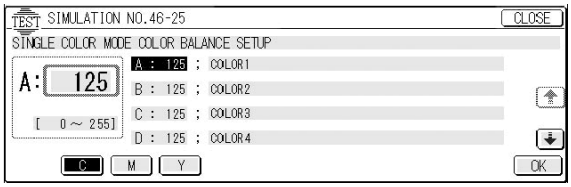

46 -26

Purpose	Adjustment
Function (Purpose)	Used to set the copy color balance adjustment to the default. (Single color copy mode)
Section	Image process (ICU)
Item	Picture quality — Color balance
Operation/ Procedure	1. Press the [EXECUTE] key. (YES/NO keys are displayed.) 2. Press the [YES] key, and the copy color balance is set to the default. (Press the [NO] key to cancel.)

(Standard value reset items)

1. RED setup ratio
2. GREEN setup ratio
3. BLUE setup ratio
4. YELLOW setup ratio
5. MAGENTA setup ratio
6. CYAN setup ratio

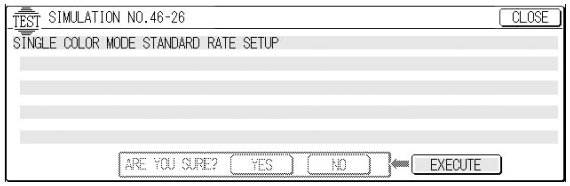

46 -27

Purpose	Adjustment
Function (Purpose)	Used to adjust the gamma/density in the black edge section of the copy mode image. (Black text and black line reproduction adjustment)
Section	Image process (ICU)
Item	Picture quality Color balance
Operation/ Procedure	1. Select the color to be adjusted with the color key (C/M/Y). 2. Select the adjustment item with the scroll key. 3. Enter the adjustment value of the selected point with the 10-key and press the [OK] key. (The entered value is set.)

Text and line edge area reproduction is adjusted by changing the gamma and the overall density level in the image edge section. For especially thin text, the boldness of lines is changed.

The greater the adjustment value is, the higher the image density in the edge area is, and vice versa.

(Items to be set)

Display		Content	Min. Value	Max. Value	Default
A	BLACK TEXT (SLOPE)	Black image edge section gamma (tilt) adjustment (Black text and black line reproduction adjustment)	1	99	50
B	BLACK TEXT (INTERCEPT)	Black image edge section density (overall level) adjustment (Black text and black line reproduction adjustment)	1	99	50

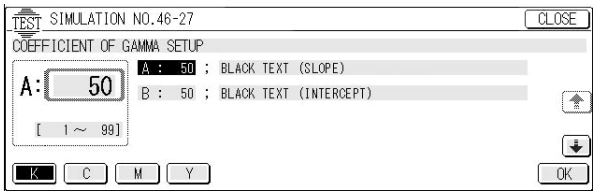

46 -28

Purpose	Adjustment
Function (Purpose)	Used to check pre-scanning operation for automatic recognition of document in the color auto copy mode. (This simulation is used only in production, and not used in the market.)
Section	Image process (ICU)
Item	Picture quality Color balance
Operation/ Procedure	1. Select the item to be set with the scroll key. 2. Enter the set value of the selected item with the 10-key and press the [OK] key. (The scan area is set.) 3. Press the [EXECUTE] key to scan the area corresponding to the set scan area. Then the scan information is displayed. Press [SETUP] key to return to the initial display. (Set content display)

Though the above set value is changed, the document auto recognition is not affected in an actual color auto copy mode.

(Items to be set)

Display		Content	Min. Value	Max. Value	Default
A	ORIGINAL MAIN SIZE (mm)	Main scanning document size (mm)	100	297	297
B	ORIGINAL SUB SIZE (mm)	Sub scanning document size	139	432	210

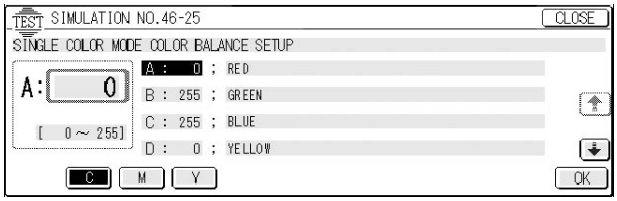

46 -33

Purpose	Setting
Function (Purpose)	Used to set the foundation process conditions in the color auto copy mode, the image auto recognition conditions, and the text recognition conditions.
Section	Image process (ICU)
Item	Picture quality
Operation/ Procedure	(Foundation removal operation condition setting) 1. Select the COLOR AE mode. 2. Remove the foundation. 3. Select the setting mode with the scroll key. A. Foundation process judgment level setting (Judged by the ratio of printed photo in the document (ratio of dots areas).) B. Foundation process judgment level setting (Judged by the ratio of color phase in the document foundation.) C. Foundation removal quantity setting 4. Enter the set value and press the [OK] key to set the entered value.

(Relationship between the set value and foundation removal operation)

Display	Set value (Display)		Ratio of printed photo in the document (Ratio of dot areas)			
			None or little	Little – Medium	Medium – Much	Very much
A	0	LOW	NO	NO	NO	NO
	1	RATHER LOW	YES	NO	NO	NO
	2 (Default)	MIDDLE	YES	YES	NO	NO
	3	RATHER HIGHT	YES	YES	YES	NO
	4	HIGHT	YES	YES	YES	YES

Display	Set value (Display)		Color phase in the document			
			None or Weak	Weak – Medium	Medium – Strong	Very strong
B	0	LOW	NO	NO	NO	NO
	1	RATHER LOW	YES	NO	NO	NO
	2 (Default)	MIDDLE	YES	YES	NO	NO
	3	RATHER HIGHT	YES	YES	YES	NO
	4	HIGHT	YES	YES	YES	YES

YES: Foundation removal is performed.
NO: Foundation removal is not performed.

(Foundation removal quantity setting)

Display		Set value (Display)	Foundation removal quantity
C	–4	0	Little
	–3	1	↑
	–2	2	
	–1	3	
	0	4 (Default)	
	+1	5	
	+2	6	
	+3	7	↓
	+4	8	Much

Whether the foundation removal is performed or not is determined by the AND condition of the set items A and B.

(Image auto recognition condition setting)

Used to set whether the text area is regarded important or not in judgment of printed photo and the text/printed photo or photograph and text/photograph.

1. Select the ORG RECOG mode.
2. Enter the set value with the 10-key and press the [OK] key to set the entered value.

Display	Set value			Content
A	TEXT PRIORITY MODE	0	DISABLE	There must be considerable level of text area to judge as text/ printed photo or text/ photograph.
		1 (Default)	ENABLE	Only a light level of text area is enough for judging as text/printed photo or text/photograph.

(Text-on-dots recognition condition setting)

Used to set whether the text on dots is recognized as text or not.

1. Select the SEG mode.
2. Enter the set value with the 10-key and press the [OK] key to set the entered value.

Display	Set value		Content
A	0 (Default)	OFF	Text on dots is not recognized as text.
		ENABLE	Text on dots is recognized as text. (Priority is placed on the reproduction of text.) Note that a dark density image may be copied as black.

(Setting the reproduction (text recognition level) of text on dots of a document printed by the printer)

If text recognition is not performed normally, the text recognition level can be adjusted. This function is effective especially when copying a document printed by an inkjet printer or a laser printer.

1. Select the SEG mode.
2. Select the setting mode B with the scroll key.
3. Enter the set value with the 10-key and press the [OK] key to set the entered value.

Display	Set value		Content
B	0 (Default)	OFF	Normal mode (Normal text recognition level) Depending on the type of documents, text images may be with sharp edges and high contrast.
	1	ON	Mode for documents printed by a printer: Documents are copied in a similar picture quality. (Low text recognition level)

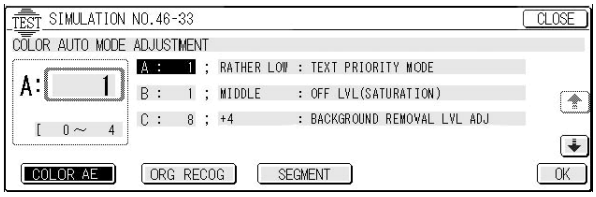

48

48 -1

Purpose	Adjustment
Function (Purpose)	Used to adjust the copy magnification ratio (main scanning and sub scanning directions).
Item	Picture quality Size/magnification ratio
Operation/ Procedure	1. Select the adjustment mode with the scroll key. 2. Enter the adjustment value with the 10-eky and press the [OK] key to set the entered value.

a. Sub scanning direction magnification ratio adjustment: By changing the scanning speed in the paper transport direction, the print magnification of images in the paper transport direction is adjusted.
[Adjustment range]: 35 ~99 (Default: 50)

b. Main scanning direction magnification ratio adjustment. The print magnification ratio in the vertical direction of images (vertical to the paper transport direction) is adjusted by software in the (F/R) image process section.
[Adjustment range]: 1~99 (Default: 50)

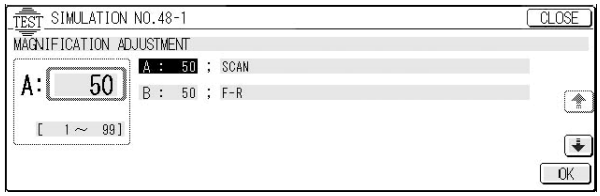

48 -6

Purpose	Adjustment
Function (Purpose)	Used to adjust each motor RPM.
Item	Operation
Operation/ Procedure	1. Select the motor to be adjusted with the scroll key. 2. Enter the adjustment value with the 10-key and press the [OK] key to set the entered value.

(Items to be set)

	Item	Set range	Default
A	RRM (BW)	1 – 99	50
B	RRM (CL)	1 – 99	50
C	BTM	1 – 99	44
D	FSM	1 – 99	80
E	DM (BW)	1 – 99	60
F	DM (CL)	1 – 99	60
G	PFM_CS	1 – 99	55
H	PFM_MAN	1 – 99	70
I	FSM(L)	1 – 99	85
J	FSM(FSM(HEAVY PAPER)	1 – 99	85
K	FSM(ENV)	1 – 99	70
L	PFM_CS(DESK)	1 – 99	55
M	PFM_CS(ADU)	1 – 99	55
N	PFM_CS(LCC)	1 – 99	55

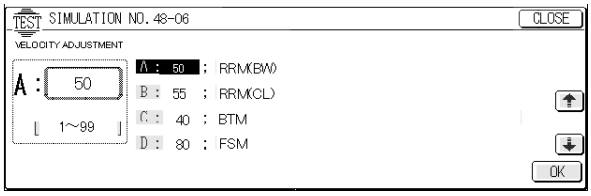

49

49 -1

Purpose	Version up
Function (Purpose)	Used for firmware version up (Machine/FAX).
Section	Firmware (Machine/FAX)
Item	Operation
Operation/ Procedure	1. Press the [EXECUTE] key to enter the Flash ROM writing mode. 2. Start the download program on the PC side and perform Flash ROM writing.

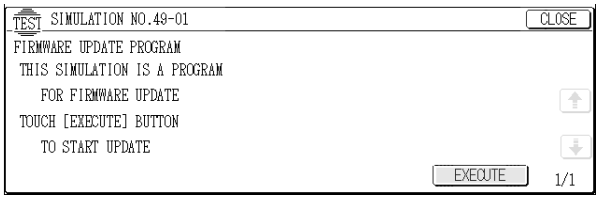

49 -2

Purpose	Version up
Function (Purpose)	Used to set the data communication speed in version up of the machine firmware.
Section	Firmware
Item	Operation
Operation/ Procedure	Press the key corresponding to the data communication speed on the PC side. Unit (bps: bit per second)

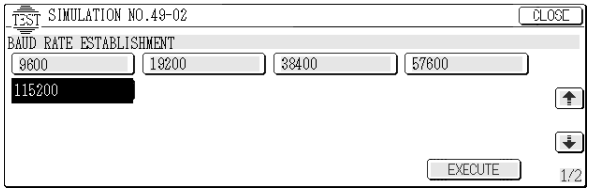

49 -10

Purpose	Version up
Function (Purpose)	Used for firmware version up (Desk unit).
Section	Firmware (Desk unit)
Item	Operation
Operation/ Procedure	1. Press the [EXECUTE] key to enter the Flash ROM writing mode. 2. Start the download program on the PC side and perform Flash ROM writing.

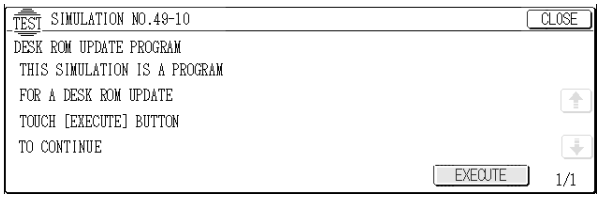

50

50 -1

Purpose	Adjustment
Function (Purpose)	Used to adjust the copy image position and the void area (image loss) on print paper in the copy mode. (The similar adjustment can be made also by SIM 50-2 (Simple method).)
Item	Picture quality Image position
Operation/ Procedure	1. Select the adjustment item with the scroll key. 2. Enter the adjustment value with the 10-key. 3. Press the [OK] key.

Display		Content	Min. Value	Max. Value	Default
A	RRC-A	Document lead edge reference position	1	80	50
B	RRC-B	Paper lead edge position	1	99	50
C	DEN-A	Lead edge void area	1	99	40
D	DEN-B	Rear edge void area	1	99	40
E	IMAGE LOSS	Lead edge image loss	0	99	40

A. Document lead edge reference position --- (RRC-A) This set value is used to adjust timing from when the document scanning is started to when the image lead edge signal
(Set range: 1 – 30) (Default value: 50)

B. Paper lead edge position --- (RRC-B) Used to adjust timing of turning on the resist roller after receiving the resist signal (LD_START).
(Set range: 1 – 99) (Default value: 50)

C. Lead edge void area --- (DEN-A) Used to specify the void area at the lead edge of the document.
(Set range: 1=99) (Default value: 40)

D. Rear edge void area --- (DEN-B) Used to specify the void area at the rear edge of the document.
(Set range: 1 – 99) (Default value: 30)

E. Lead edge image loss --- (IMAGE LOSS) Used to specify the image loss.
(Set range: 0~99) (Default value: 40)

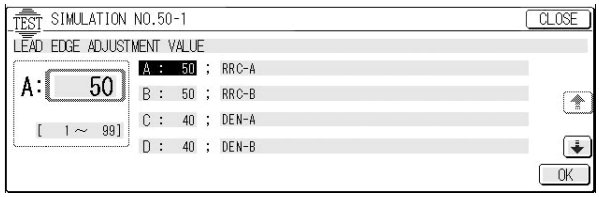

50 -2

Purpose	Adjustment
Function (Purpose)	Used to adjust the copy image position and the void area (image loss) on print paper in the copy mode. (Simple method) (The same content of SIM 50-1. However this simulation is easier to perform.)
Item	Picture quality Image position

Operation/ Procedure	1. Select the adjustment item with the scroll key. 2. Enter the adjustment value with the 10-key. 3. Press the [OK] key.

This simulation is used to perform the lead edge adjustment by directly entering the lead edge shift in 400% copy.

Display		Content	Min. Value	Max. Value	Default
A	L1	Document lead edge reference position	0	999	240
B	L2	Paper lead edge position	0	999	40
C	DEN-A	Lead edge void area	1	99	40
D	DEN-B	Rear edge void area	1	99	40
E	IMAGE LOSS	Document lead edge image loss adjustment value	0	99	40

(Default values)

A. Document lead edge reference position --- (L1) 240
B. Paper lead edge position --- (L2) 40
C. Lead edge void area --- (DEN-A) 40
D. Rear edge void area --- (DEN-B) 40
E. IMAGE LOSS --- 40

50 -5

Purpose	Adjustment
Function (Purpose)	Used to adjust the image position and print area in the sub scanning direction. (Print engine section)
Section	ICU/Printer
Item	Picture quality
Operation/ Procedure	1. Select the adjustment mode (DEN-B/DEN-C) with the scroll key.

2. Enter the adjustment value of the selected point with the 10-key, and press the [OK] key. (The entered adjustment value is set. The [EXECUTE] key or the scroll key can be used instead of the [OK] key in the above procedure.)
3. Select the paper feed mode.
4. Press the [EXECUTE] key.

The test pattern corresponding to the entered adjustment value is printed.

When the adjustment value of item A (DEN-C) is decreased by 1, the print start position in the sub scanning direction shifts 0.125mm toward the paper lead edge.

When the adjustment value of item B (DEN-B) is decreased by 1, the print start position in the sub scanning direction shifts 0.125mm toward the paper rear edge.

(Descriptions on Set values)

Display		Content	Min. Value	Max. Value	Default
A	DEN-C	Sub scanning print lead edge adjustment	1	99	40
B	DEN-B	Sub scanning print area adjustment	1	99	40
C	MULTI COUNT	Print quantity	1	999	1
D	PAPER	Paper feed tray selection (MFT, CS1, CS2, CS3, CS4, LCC)	1	6	2 (CS1)
E	EXIT TRAY	Paper exit tray selection (R, S)	1	2	1 (R)
F	DUPLEX	Duplex print selection (NO, YES)	1	2	1 (NO)

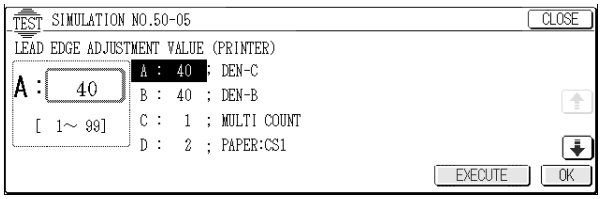

50 -10

Purpose	Adjustment
Function (Purpose)	Used to adjust the print image center position. (Adjustment is performed in each paper feed position separately.)
Section	Image process (ICU)
Item	Picture quality Image position
Operation/ Procedure	1. Select the adjustment mode (DEN-B/DEN-C) with the scroll key. 2. Enter the adjustment value of the selected point with the 10-key, and press the [OK] key. (The entered adjustment value is set. The [EXECUTE] key or the scroll key can be used instead of the [OK] key in the above procedure.) 3. Press the [EXECUTE] key. The test pattern corresponding to the entered adjustment value is printed.

Display	Content	Min. value	Max. value	Default
A	MFT	Print off-center adjustment value (Manual paper feed)	1 – 99	50
B	CS1	Print off-center adjustment value (1 cassette)	1 – 99	50
C	CS2	Print off-center adjustment value (2 cassette)	1 – 99	50
D	CS3	Print off-center adjustment value (3 cassette)	1 – 99	50
E	CS4	Print off-center adjustment value (4 cassette)	1 – 99	50
F	LCC	Print off-center adjustment value (LCC)	1 – 99	50
G	ADU	Print off-center adjustment value (ADU)	1 – 99	50
H	MULTI COUNT	Print quantity	1 – 999	1
I	PAPER	Paper feed tray selection (MFT, CS1, CS2, CS3, CS4, LCC)	1 – 6	2 (CS1)
J	EXIT TRAY	Paper exit tray selection (R, S)	1 or 2	1
K	DUPLEX	Duplex print selection (NO, YES)	1 or 2	1

- When the adjustment value of items A~G is decreased by 1, the main scanning print position shifts 0.1mm toward the front side.
- When the adjustment value of items A~G is increased by 1, the main scanning print position shifts 0.1mm toward the rear side.
- To execute item G (ADU adjustment), the ADU must be installed. In this case, item K (DUPLEX) must be set to 2.

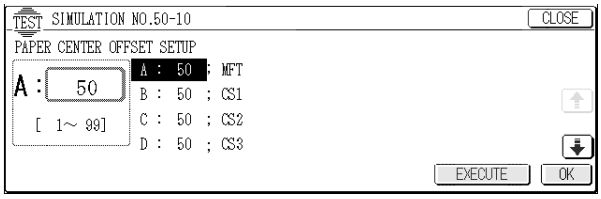

50 -12

Purpose	Adjustment
Function (Purpose)	Used to adjust the print image center position. (The adjustment is performed in each document mode separately.)
Section	Image process (ICU)
Item	Picture quality　　Image position
Operation/ Procedure	1. Select the adjustment mode with the scroll key. 2. Enter the adjustment value with the 10-key and press the [OK] key to set the entered value. ∗ When the set value is increased, the image is shifted to the rear side. When the set value is decreased, the image is shifted to the front side.

(Items to be set)

Display		Content	Min. Value	Max. Value	Default
A	OC	Platen mode (Document table)	1	99	50
B	ADF	RADF mode	1	99	50

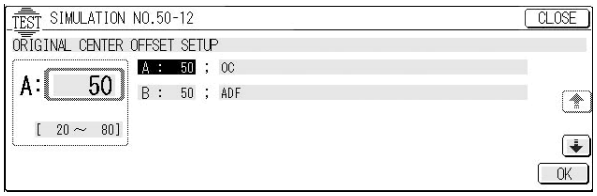

50 -20

Purpose	Adjustment
Function (Purpose)	Used to adjust the image registration. (Manual adjustment)
Item	Picture quality　　Image position
Operation/ Procedure	1. Select the adjustment mode (DEN-B/DEN-C) with the scroll key. 2. Enter the adjustment value of the selected point with the 10-key, and press the [OK] key. (The entered adjustment value is set.) 3. Press the [EXECUTE] key, and the registration adjustment pattern in the main scanning direction is printed.

(Set items)

Display	Content	Min. value	Max. value	Default	Display
A	MAIN-REGIST C	Main scanning direction registration adjustment (C)	12	88	50
B	SUB-REGIST C	Sub scanning direction registration adjustment (C)	1	132	50
C	MAIN-REGIST M	Main scanning direction registration adjustment (M)	12	88	50
D	SUB-REGIST M	Sub scanning direction registration adjustment (M)	1	132	50
E	MAIN-REGIST Y	Main scanning direction registration adjustment (Y)	12	88	50
F	SUB-REGIST Y	Sub scanning direction registration adjustment (Y)	1	132	50
G	MULTI COUNT	Adjustment pattern print quantity	1	999	1
H	PAPER	Paper feed tray selection 8MFT, CS1, CS2, CS3, CS4, LCC)	1	6	2 (CS1)
I	EXIT TRAY	Paper exit tray selection (R, S)	1	2	1
J	DUPLEX	Duplex print selection (NO, YES)	1	2	1

∗ When the adjustment value of items A, C, and E is decreased by 1, the adjustment target color image shifts by one pixel in the main scanning direction.

∗ When the adjustment value of items B, D, and E is decreased by 1, the adjustment target color image shifts by one pixel in the sub scanning direction.

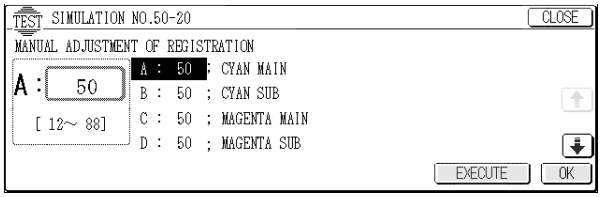

50 -22

Purpose	Adjustment
Function (Purpose)	Used to adjust the image registration. (Automatic adjustment)
Item	Picture quality
Operation/ Procedure	Press the [EXECUTE] key. The color registration adjustment (automatic adjustment) in the main scanning direction and the sub scanning direction is performed. The process of the adjustment is displayed as follows: "NOW EXECUTING... S[**********]E" When the adjustment is completed, the [EXECUTE] key returns to the normal display. In case of an error, the cause is displayed.

(Display items)

Display	Content	Min. Value	Max. Value	Default
CYAN MAIN	Main scanning direction registration adjustment (C)	12	88	50
CYAN SUB	Main scanning direction registration adjustment (M)	1	132	50
MAGENTA MAIN	Main scanning direction registration adjustment (Y)	12	88	50
MAGENTA SUB	Sub scanning direction registration adjustment (C)	1	132	50
YELLOW MAIN	Sub scanning direction registration adjustment (M)	1	132	50
YELLOW SUB	Sub scanning direction registration adjustment (Y)	1	132	50

Error display	Content
SENSOR_ADJUSTMENT_ERROR	Sensor adjustment abnormality
BLACK_DENSITY_ERROR	Black density error
CYAN_DENSITY_ERROR	Cyan density error
MAGENTA_DENSITY_ERROR	Magenta density error

Error display	Content
YELLOW_DENSITY_ERROR	Yellow density error
CYAN_MAIN_FINE_ERROR	Cyan main scanning fine adjustment error
MAGENTA_MAIN_FINE_ERROR	Magenta main scanning fine adjustment error
YELLOW_MAIN_FINE_ERROR	Yellow main scanning fine adjustment error
CYAN_SUB_FINE_ERROR	Cyan sub scanning fine adjustment error
MAGENTA_SUB_FINE_ERROR	Magenta sub scanning fine adjustment error
YELLOW_SUB_FINE_ERROR	Yellow sub scanning fine adjustment error
CYAN_MAIN_ROUGH1_ERROR	Cyan main scanning rough adjustment 1 error
MAGENTA_MAIN_ROUGH1_ERROR	Magenta main scanning rough adjustment 1 error
YELLOW_MAIN_ROUGH1_ERROR	Yellow main scanning rough adjustment 1 error
CYAN_SUB_ROUGH1_ERROR	Cyan sub scanning rough adjustment 1 error
MAGENTA_SUB_ROUGH1_ERROR	Magenta sub scanning rough adjustment 1 error
YELLOW_SUB_ROUGH1_ERROR	Yellow sub scanning rough adjustment 1 error
CYAN_MAIN_ROUGH2_ERROR	Cyan main scanning rough adjustment 2 error
MAGENTA_MAIN_ROUGH2_ERROR	Magenta main scanning rough adjustment 2 error
YELLOW_MAIN_ROUGH2_ERROR	Yellow main scanning rough adjustment 2 error
CYAN_SUB_ROUGH2_ERROR	Cyan sub scanning rough adjustment 2 error
MAGENTA_SUB_ROUGH2_ERROR	Magenta sub scanning rough adjustment 2 error
YELLOW_SUB_ROUGH2_ERROR	Yellow sub scanning rough adjustment 2 error
OTHERS_ERROR	Other errors

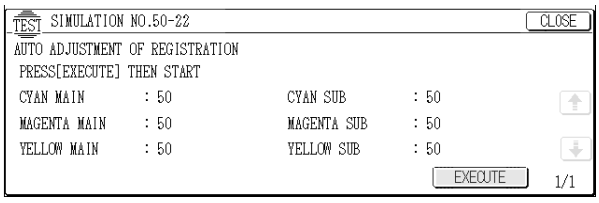

50 -24

Purpose	Adjustment
Function (Purpose)	Used to display the adjustment data of automatic registration.
Item	Picture quality Image position
Operation/ Procedure	When [PARTCH] is selected, the patch scan data in the automatic registration adjustment performed with SIM 50-22 is displayed. When [OTHER] is selected, the sensor calibration data/ belt element data in the automatic registration adjustment performed with SIM 50-22 are displayed. 1. Select the color to be set with the color key. (CMY) 2. Select the item to be set with the scroll key.

(Display items)

Display	Content	Min. Value	Max. Value
MAIN FINE	Patch scan data (11 patches) in the main scanning direction fine adjustment	0	9999
MAIN ROUGH1	Patch scan data (4 patches) in the main scanning direction rough adjustment 1	0	9999
MAIN ROUGH2	Patch scan data (2 patches) in the main scanning direction rough adjustment 2	0	9999
RESULT	Current adjustment value	1	132
SUB FINE	Patch scan data (11 patches) in the sub scanning direction fine adjustment	0	9999
SUB ROUGH1	Patch scan data (4 patches) in the sub scanning direction rough adjustment 1	0	9999
SUB ROUGH2	Patch scan data (3 patches) in the sub scanning direction rough adjustment 2	0	9999
SENSOR OUTPUT	Adjusted LED current in sensor calibration	0	255
SENSOR INPUT	Sensor transfer belt surface detection level in sensor calibration	0	255
ERROR RECODE *1	Error history (Latest 5 items)	0	99
DENSITY CHECK K	Toner patch density value (K)	0	9999
DENSITY CHECK C	Toner patch density value (C)	0	9999
DENSITY CHECK M	Toner patch density value (M)	0	9999
DENSITY CHECK Y	Toner patch density value (Y)	0	9999
REGIST COUNT	Registration count (Transfer belt mileage: A4 size is counted as 1.)	0	9999
EXECUTE COUNT	Number of execution (Number of execution / Number of execution condition)	0	9999

*1: Error code and its content

00: No error
01: Belt element defect
02: Insufficient Black patch density
03: Insufficient Cyan patch density
04: Insufficient Magenta patch density
05: Insufficient Yellow patch density
06: Main scanning direction fine adjustment Cyan patch print error
07: Main scanning direction fine adjustment Magenta patch print error
08: Main scanning direction fine adjustment Yellow patch print error
09: Sub scanning direction fine adjustment Cyan patch print error
10: Sub scanning direction fine adjustment Magenta patch print error
11: Sub scanning direction fine adjustment Yellow patch print error
12: Main scanning direction rough adjustment 1 Cyan patch print error
13: Main scanning direction rough adjustment 1 Magenta patch print error
14: Main scanning direction rough adjustment 1 Yellow patch print error
15: Sub scanning direction rough adjustment 1 Cyan patch print error
16: Sub scanning direction rough adjustment 1 Magenta patch print error
17: Sub scanning direction rough adjustment 1 Yellow patch print error
18: Main scanning direction rough adjustment 2 Cyan patch print error
19: Main scanning direction rough adjustment 2 Magenta patch print error
20: Main scanning direction rough adjustment 2 Yellow patch print error

21: Sub scanning direction rough adjustment 2 Cyan patch print error
22: Sub scanning direction rough adjustment 2 Magenta patch print error
23: Sub scanning direction rough adjustment 2 Yellow patch print error
99: Other error

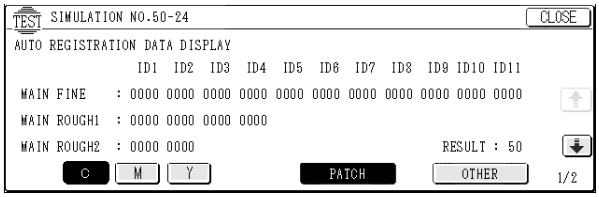

50 -27

Purpose	Adjustment
Function (Purpose)	Used to adjust image loss in the FAX/scanner mode.
Section	FAX/Scanner
Item	Picture quality Image position
Operation/ Procedure	1. Select the adjustment mode with the scroll key. 2. Enter the adjustment value at the selected point, and press the [OK] key. The entered value is set.

When the adjustment value is changed, the image losses at the four corners are changed uniformly.

Display	Content	Min. Value	Max. Value	Default
A	FAX mode image loss	0	99	20
B	Scanner mode (all modes except for the copy mode) image loss	0	99	40

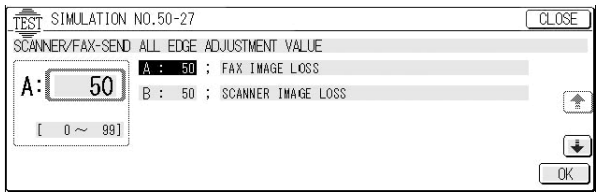

51

51 -01

Purpose	Adjustment
Function (Purpose)	Used to adjust the transfer voltage ON timing.
Section	Process (Photoconductor, developing, transfer, cleaning) Transfer
Item	Operation
Operation/ Procedure	1. Select the adjustment mode with the scroll key. 2. Enter the set value with the 10-key and press the [OK] key to set the entered value.

Item		Description on item	Set range	Default
A	NORMAL ON TIMING	Used to set the transfer ON timing for the paper lead edge except for OHP.	1 – 99	40
B	NORMAL OFF TIMING	Used to set the transfer OFF timing for the paper rear edge except for OHP.	1 – 99	60
C	OHP ON TIMING	Used to set the transfer ON timing for the lead edge of OHP.	1 – 99	50
D	OHP OFF TIMING	Used to set the transfer OFF timing for the rear edge of OHP.	1 – 99	44

- When the set value is 50 at transfer ON timing, the transfer operation is turned on immediately when the paper lead edge passes beneath the drum.
- When the set value is 50 at transfer OFF timing, the transfer operation is turned off immediately when the paper rear edge passes beneath the drum.
- When the transfer ON/OFF timing value is decreased, the transfer ON/OFF timing is advanced for the paper.
- When the transfer ON/OFF timing value is increased, the transfer ON/OFF timing is delayed for the paper.
- Change of ±1 corresponds to about 10ms. The set range is –490 to +490ms

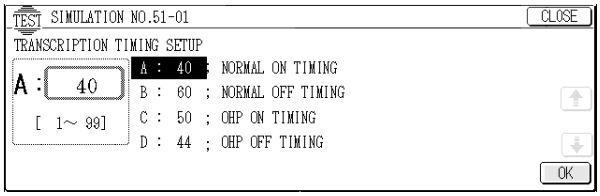

51 -02

Purpose	Adjustment
Function (Purpose)	Used to adjust the contact pressure of paper on the resist roller of each section (each paper feed and duplex feed of the copier). (This adjustment is required when the print image position variations are considerably great or when paper jams occur frequently.)
Section	Paper transport (Paper exit, switchback, transport)
Item	Operation
Operation/ Procedure	1. Select the adjustment mode with the scroll key. 2. Enter the set value with the 10-key and press the [OK] key to set the entered value.

(Items to be set)

Display	Content	Min. value	Max. value	Default	Display
A	TRAY	Cassette tray resist adjustment value	1	99	25
B	LCC	LCC tray resist adjustment value	1	99	35
C	ADU	ADU resist adjustment value	1	99	30
D	MANUAL PLAIN PAPER (S)	Manual feed tray resist adjustment value (Normal paper, small size)	1	99	50
E	MANUAL HEAVY PAPER1	Manual feed tray resist adjustment value (Heavy paper 1)	1	99	50
F	MANUAL HEAVY PAPER2	Manual feed tray resist adjustment value (Heavy paper 2)	1	99	50
G	MANUAL OHP1	Manual feed tray resist adjustment value (OHP 1)	1	99	50
H	MANUAL OHP2	Manual feed tray resist adjustment value (OHP 2)	1	99	50

Display	Content	Min. value	Max. value	Default	Display
I	MANUAL ENV	Manual feed tray resist adjustment value (Envelope)	1	99	50
J	DESK(S)	Desk tray resist adjustment value (Small size)	1	99	30
K	DESK(L)	Desk tray resist adjustment value (Large size)	1	99	30
L	MANUAL PLAIN PAPER(L)	Manual feed tray resist adjustment value (Normal paper, large size)	1	99	50
M	TRAY(L)	Cassette tray deflection adjustment value (Large size)	1	99	25
N	ADU(L)	ADU deflection adjustment value (Large size)	1	99	30

- Used to set the resist roller clutch (RRC) ON timing. When the adjustment value is increased, the timing is delayed and the pressure of paper onto the resist roller is increased.
- When the set value is changed by 1, the timing is changed by about 1.0ms.

* Paper size judgment method
  In the cassette tray paper feed, the paper size smaller than 170mm is regarded as the small size.
  In the desk tray or ADU paper feed, the paper size of 216mm or smaller is regarded as the small size.
  In the manual paper feed tray paper feed, the paper area of 49128mm² (184 x 267) or less is regarded as the small size.

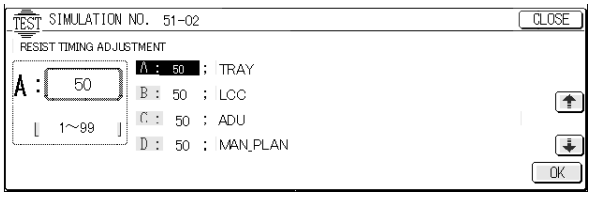

52

52 -01	
Purpose	Adjustment
Function (Purpose)	Used to adjust the duplex print mode stacking capacity (Used to adjust the stop position of the duplex unit paper tray width alignment plate. The home position of the width alignment plate is changed by software.)
Section	Duplex
Item	Operation
Operation/ Procedure	1. Select the adjustment mode with the scroll key. * When the machine is not ready for paper feed, "NOT READY" is displayed. When the corresponding tray is unable to feed, "FEED UNABLE" is displayed. If it is able to feed, "FEED ABLE" is displayed. 2. Enter the set value with the 10-key and press the [OK] key to set the entered value. 3. Press the [EXECUTE] key. * If there is no paper on the duplex tray, one sheet of the selected paper is fed and transported to the duplex tray. Then the entered value in procedure 3 is set and the alignment plate moves according to the home position corresponding to the entered value.

* The paper sizes which can be used for transport and alignment plate adjustment with SIM52-01 are LT, LTR, A4, A4R, B5, B5R, 16K, and 16KR only. (For the other sizes, "FEED ENABLE" occurs.)

(Set items)

Item		Set range	Default
A	Intermediate tray alignment plate adjustment value (Manual feed)	0 – 99	50
B	Intermediate tray alignment plate adjustment value (Cassette 1)	0 – 99	50
C	Intermediate tray alignment plate adjustment value (Cassette 3)	0 – 99	50
D	Intermediate tray alignment plate adjustment value (Cassette 4)	0 – 99	50
E	Intermediate tray alignment plate adjustment value (LCC)	0 – 99	50

- When the set value is changed by 1, it is changed by about 0.2mm. When the set value is increased, the alignment plate paper width is narrowed. The adjustment value can be adjusted in the increment of ±50 with 50 as the center value.

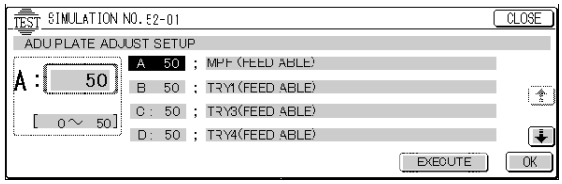

53

53 -01	
Purpose	Adjustment
Function (Purpose)	Used to adjust the document stop position in each operation mode of the RADF.
Section	RADF
Item	Operation
Operation/ Procedure	1. Select the adjustment mode with the scroll key. 2. Enter the set value with the 10-key and press the [OK] key to set the entered value. This simulation is used to adjust the stop timing of the document transport belt.

(Items to be set)

Item			Set range	Default
A	NORMAL (S)	Document stop position adjustment with normal paper in single copy	1 – 15	8
B	NORMAL (D)	Document stop position adjustment with normal paper in duplex copy	1 – 15	8

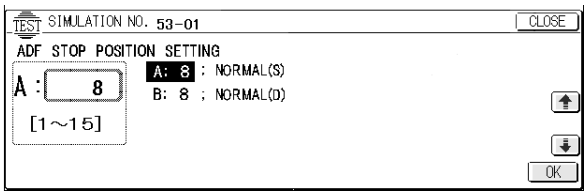

53 -02

Purpose	Adjustment
Function (Purpose)	Used to adjust the optical sensor sensitivity in RADF.
Section	RADF
Item	Operation
Operation/ Procedure	1. The sensor names are displayed. Select the sensor to be adjusted with the key.

2. Press the [EXECUTE] key. The adjustment of the sensor selected in procedure 1 is started. During execution of the adjustment, the [EXECUTE] key is highlighted. If the [EXECUTE] key is pressed under this state, the adjustment can be interrupted.

* After completion of the adjustment, the COMPLETE display is shown. In case of an abnormality, the INCOMPLETE display is shown.

(Set items (sensors))

Display	Content	Note
RESIST	Resist sensor	
REVERSE	Reverse sensor	
TIMING	Timing sensor	
TRAYVOLA4R	Tray A4R (11 x 8.5R) width sensor	After selecting TRAYVOLA4R, set the tray document guide to A4R (11 x 8.5R) position, and press the [EXECUTE] key.
TRAYVOLMIN	Tray paper min. width detection	After selecting TARYVOLMIN, set the tray document guide to the minimum width position, and press the [EXECUTE] key.
TRAYVOLMAX	Tray paper max. width detection	After selecting TARYVOLMAX, set the tray document guide to the maximum width position, and press the [EXECUTE] key.
TRAYVOLB5	Tray B5 width detection	After selecting TARYVOLB5, set the tray document guide to the A4R (11 x 8.5R) width position, and press the [EXECUTE] key.

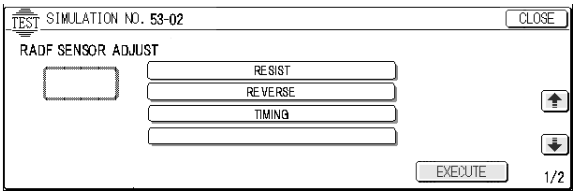

60

60 -01

Purpose	Operation test/check
Function (Purpose)	Used to check the operation of ICU PWB image DRAM read/write.
Section	ICU (Memory)
Item	Operation
Operation/ Procedure	Press the [EXECUTE] key, and memory read/write operation check is started. After completion of check, the result is displayed with NG or OK.

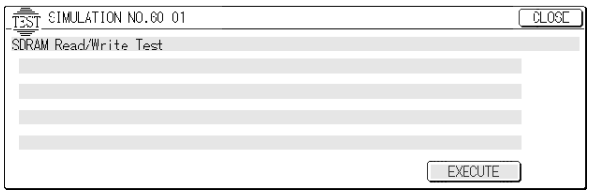

61

61 -04

Purpose	Adjustment
Function (Purpose)	Used to adjust the scanner (writing) unit (LED array unit) skew.
Section	Scanner (writing)
Item	Operation
Operation/ Procedure	1. Set the print conditions of the scanner (writing) unit (LED array unit) skew adjustment pattern. 2. Press the [EXECUTE] key. The scanner (writing) unit (LED array unit) skew adjustment pattern is printed.

(Items to be set)

Display		Content	Min. Value	Max. Value	Default
A	PATTERN	Print pattern specification 1: SKEW--- Used to check scan tilt. 2: FOCUS --- Used to check/adjust focus.	1	2	1
B	LINE PITCH	Dot print width (N-1) specification	1	10	7
C	POSITION	Pattern output area selection	1	12	6
D	MULTI COUNT	Print quantity	1	999	1
E	PAPER	Paper feed tray selection (MFT, CS1,CS2, CS3, CS4, LCC)	1	6	2 (CS1)
F	EXIT TRAY	Paper exit tray selection (R, S)	1	2	1 (R)

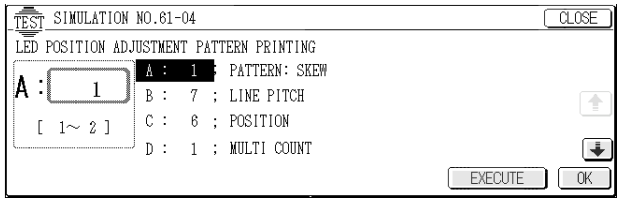

63

63 -01

Purpose	Adjustment/Setting/Operation data output, check (display, print)
Function (Purpose)	Used to check the result of shading correction. (The shading correction data are displayed.)
Section	Scanner (Exposure)
Item	Operation
Operation/ Procedure	Used to display the latest shading correction result. Data for each color can be separately checked with the color keys. 1. Select the color to be set with the color keys (CMY). 2. The display page can be shifted with the scroll key.

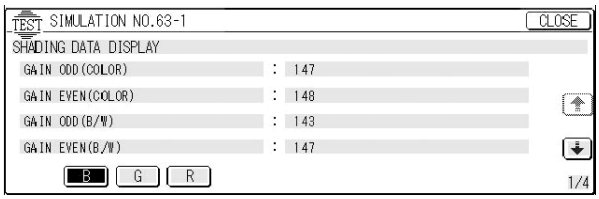

63 -03

Purpose	Adjustment
Function (Purpose)	Used to adjust the CCD color balance (gamma).
Section	Scanner (Image scanning)
Item	Picture quality Color balance
Operation/ Procedure	Set the SIT chart (UKOG-0280FCZZ) on the document table, and press the [EXECUTE] key. The color coefficient automatic adjustment pattern reading is started to calculate and display the color coefficient data. The color coefficient data of each color can be displayed with the color key.

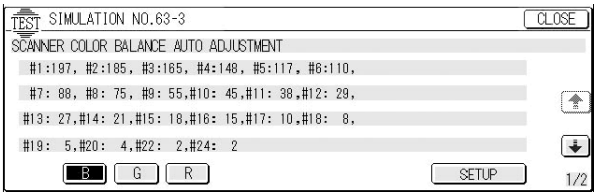

63 -05

Purpose	Setting
Function (Purpose)	Used to set the CCD color balance (gamma) default.
Section	Scanner (Image scanning)
Item	Picture quality Color balance
Operation/ Procedure	1. Press the [EXECUTE] key, and the [YES] and [NO] keys become active. 2. When the [YES] key is pressed, the CCD color balance value is set to the default.

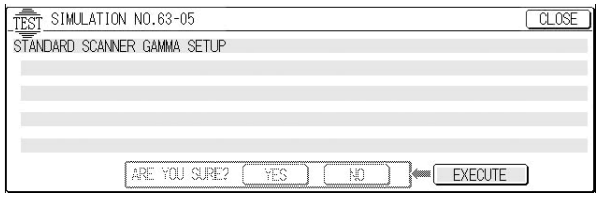

63 -06

Purpose	Adjustment/Operation data output check (display, print)
Function (Purpose)	Used to check the color balance (gamma) check patch.
Section	Image process (ICU)
Item	Picture quality Color balance
Operation/ Procedure	1. Set the color balance check patch printed with SIM 46-21 on the document table. 2. Press the [EXECUTE] key, and the reading is started and the data are displayed on the display.

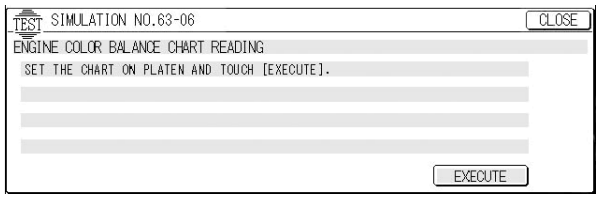

63 -07

Purpose	Setting
Function (Purpose)	Used to set the target color balance (gamma) for auto color balance adjustment. The standard color balance (gamma) or an optional color balance (gamma) is set as the service target.
Section	Image process (ICU)
Item	Picture quality Color balance
Operation/ Procedure	1. In the copy color balance adjustment (manual adjustment) (SIM 46-21) mode, the color patch image (adjustment pattern) is outputted. (This must be adjusted properly.) 2. Press the [SETUP] key. 3. Set the color patch image (adjustment pattern) paper printed in the copy color balance adjustment (manual adjustment) (SIM 46-21) mode on the document table. 4. Press the [EXECUTE] key. The color patch image (adjustment pattern) is read. 5. Press the REPEAT key and perform procedure 4 again. 6. Press the [OK] key. The color balance corresponding to the color patch image (adjustment pattern) printed in the copy color balance adjustment (manual adjustment) is set as the service target.

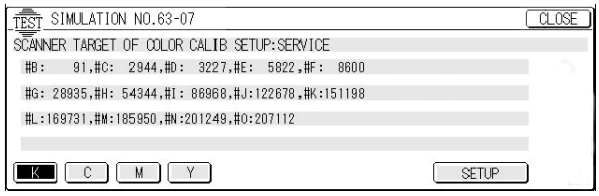

63 -08

Purpose	Setting
Function (Purpose)	Used to set the target color balance (gamma) for auto color balance adjustment (SIM 46-24). The service target is set to the default (standard) color balance (gamma).
Section	Scanner (Image scanning)
Item	Picture quality Color balance
Operation/ Procedure	1. Press the [EXECUTE] key. 2. Press the [YES] key. The service target is set to the default (standard) color balance (gamma).

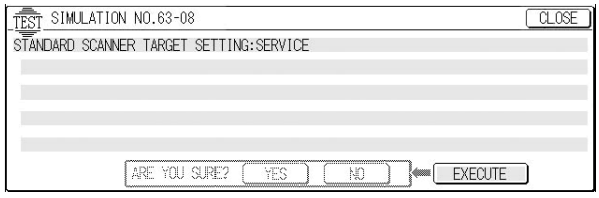

63 -09

Purpose	Setting
Function (Purpose)	Used to adjust the CCD gamma (CCD calibration) (copy document mode).
Section	Scanner (Image scanning)
Item	Picture quality Color balance
Operation/ Procedure	1. Set the SIT chart (UKOG-0280FCZZ) on the document table, and make a copy in the manual photo mode. 2. Set the copied SIT chart on the document table. 3. Enter the simulation 63-9 mode. 4. Press the [EXECUTE] key. The color coefficient automatic adjustment pattern reading is started to calculate and display the color coefficient data. The color coefficient data of each color can be displayed with the color key.

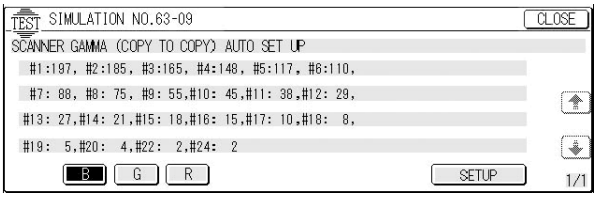

63 -10

Purpose	Setting
Function (Purpose)	Used to set the copy document mode color balance (gamma) default.
Section	Scanner (Image scanning)
Item	Picture quality Color balance
Operation/ Procedure	1. Press the [EXECUTE] key, and the [YES] and [NO] keys become active. 2. When the [YES] key is pressed, the color balance value is set to the default.

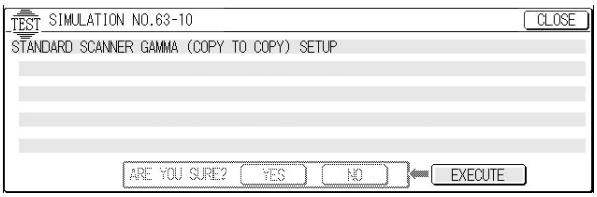

64

64 -01

Purpose	Operation test/check
Function (Purpose)	Used to adjust the operations of the printer section (self-print operation/color). (The print pattern, paper feed mode, print mode, print quantity, and density can be changed optionally.)
Section	Printer
Item	Operation
Operation/ Procedure	1. Select the color to be self-printed with the color keys (CMYK). (Two or more colors can be selected together.) 2. Select the set item with the scroll key. 3. Enter the print conditions with the 10-key, and press the [OK] key to set the entered value. 4. Press the [EXECUTE] Key. The self-print pattern is printed.

(Items to be set)

	Display	Content	Set range	Default
A	PRINT PATTERN	Print pattern specification (* For details, refer to the following.)	1 – 23	1
B	DENSITY	Print gradation specification	1 – 255	5
C	MULTI COUNT	Print quantity	1 – 999	1
D	EXPOSURE	Exposure mode specification 1: THROUGH --- No process (Through) 2: CHAR/RIC --- Text/Printed photo 3: CHAR/PRPIC --- Text/Photograph 4: CHAR --- Text 5: PRITN PIC --- Printed photo 6: PRINT PAPER --- Photograph 7: MAP --- Map 8: STANDARD DITCH --- No correction, dither	1 – 8	1
E	PAPER	Paper feed tray selection (MFT, CS1, CS2. CS3, CS4, LCC)	1 – 6	2 (CS1)
F	EXIT TRAY	Paper exit tray selection (R, S)	1 – 2	1 (R)
G	DUPLEX	Duplex print selection (NO, YES)	1 – 2	1 (NO)
H	PAPER TYPE	Paper kind selection 1: PLAIN 2: HEAVY 1 3: HEAVY 2 4: OHP 1 5: OHP 2 6: ENVELOPE	1 – 6	1

(Print pattern descriptions)

No.	Content	Pattern generating device	Color selection		Gradation selection	Density selection
			Condition	No color		
1	Grid pattern	LED	❍	K only	Line width	×
2	Dot print	LED	❍	K only	❍	×
3	16 gradations: Sub scan	LED	❍ (Max. 3 colors)	K only	×	×
4	16 gradations: Main scan	LED	❍ (Max. 3 colors)	K only	×	×
5	Even pitch pattern (1 by 4): Sub scan	LED	❍	K only	❍	×
6	Even pitch pattern (1 by 4): Sub scan	LED	❍	K only	❍	×
7	Even pitch pattern (2 by 6): Sub scan	LED	❍	K only	❍	×
8	Even pitch pattern (2 by 6): Sub scan	LED	❍	K only	❍	×

No.	Content	Pattern generating device	Color selection		Gradation selection	Density selection
			Condition	No color		
9	Each color 10% (A4/A4R) density print	LED	× (4 colors fixed)	—	Pattern width	×
10	8 color band print	LED	× (4 colors fixed)	—	❍	×
11	Even pitch pattern (1 by N-1) sub scan direction gradation	LED	❍ (Max. 3 colors)	K only	Interval width (N-1)	×
12	Grid pattern	Input process	❍	K only	Grid pattern	❍
13	Dot print	Input process	❍	K only	❍	❍
14	256 gradations: Sub scan	Input process	❍ (Max. 3 colors)	K only	None	❍
15	256-gradation pattern (Fixed gradation)	Input process	❍ (Max. 3 colors)	K only	None	❍
16	256-gradation pattern (Certain gradation) (Gradation specified from external)	Input process	❍ (Max. 3 colors)	K only	None	❍
17	Whole background (half-tone)	Half tone	❍ (Max. 3 colors)	K only	❍	❍
18	256-gradation pattern (Other dither)	Half tone	❍ (Max. 3 colors)	K only	None	❍
19	256-gradatin pattern (Text dither)	Half tone	❍ (Max. 3 colors)	K only	None	❍
20	2-color background print	LED	❍	K only	❍	×
21	2-color dot print	LED	❍	K only	❍	×
22	4-color background print	LED	× (4 colors fixed)	—	❍	×
23	4-color dot print	LED	× (4 colors fixed)	—	❍	×

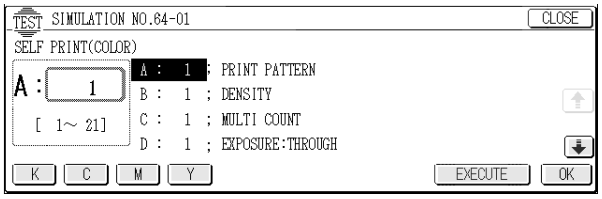

64 -02

Purpose	Adjustment/Setting/Operation data output, check (display, print)
Function (Purpose)	Used to print the color patch image (adjustment pattern). The above color patch image (adjustment pattern) is outputted according to the currently adjusted color balance (gamma). Use SIM 63-7 to read the color patch image (adjustment pattern), which can be used as the service target of the automatic color balance (gamma) adjustment.
Section	Printer
Item	Operation
Operation/ Procedure	1. Select mode A with the scroll key. 2. Enter the print quantity with the 10-key. 3. Press the [OK] key. 4. Select mode C with the scroll key. 5. Enter the paper kind with the 10-key. 6. Press the [OK] key. 7. Select mode B with the scroll key. 8. Enter (select) the print pattern with the 10-key. 9. Press the [OK] key. 10. Press the [EXECUTE] key. The color patch image (adjustment pattern) is outputted. Set Item B to "2". Print out is made under half tone correction.

Display		Content	Min. Value	Max. Value	Default
A	COPIES	Print quantity	1	999	999
B	PROC ADJ	Reflection of half tone correction	1	2	2

Set value (B: PROC ADJ)	Reflection of half tone correction
1	NO
2	YES

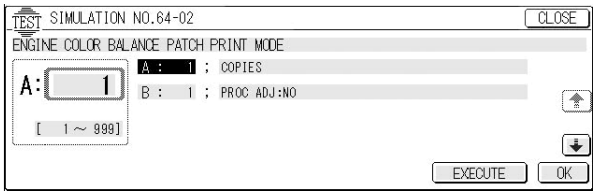

64 -03

Purpose	Operation test/check
Function (Purpose)	Used to check the operations of the printer section (self-print operation/BW). (The print pattern, the paper feed mode, the print mode, the print quantity, and the density can be set optionally.)
Section	Printer
Item	Operation
Operation/ Procedure	1. Select the set item with the scroll key. 2. Enter the print conditions with the 10-key and press the [OK] key to set the entered value. 3. Press the [EXECUTE] key. The self-print pattern is printed.

(Items to be set)

Display		Content	Set range	Default
A	PRINT PATTERN	Print pattern specification (* For details, refer to the following.)	1 – 23	1
B	DENSITY	Print gradation specification	1 – 255	5
C	MULTI COUNT	Print quantity	1 – 999	1

Display		Content	Set range	Default
D	EXPOSURE	Exposure mode specification 1: THROUGH --- No process (Through) 2: CHAR/RIC --- Text/Printed photo 3: CHAR/PRPIC --- Text/Photograph 4: CHAR --- Text 5: PRITN PIC --- Printed photo 6: PRINT PAPER --- Photograph 7: MAP --- Map 8: STANDARD DITCH --- No correction, dither	1 – 8	1
E	PAPER	Paper feed tray selection (MFT, CS1, CS2. CS3, CS4, LCC)	1 – 6	2 (CS1)
F	EXIT TRAY	Paper exit tray selection (R, S)	1 or 2	1 (R)
G	DUPLEX	Duplex print selection (NO, YES)	1 or 2	1 (NO)
H	PAPER TYPE	Paper kind selection 1: PLAIN 2: HEAVY 1 3: HEAVY 2 4: OHP 1 5: OHP 2 6: ENVELOPE	1 – 6	1

- Details of each print pattern in item A

No.	Content	Pattern generating device	Gradation selection	Density selection
1	Grid pattern	LED	Line width	×
2	Dot pattern	LED	❍	×
3	16-grdation: sub scan	LED	×	×
4	16-gradation: main scan	LED	×	×
5	Even pitch pattern (1 by 4): sub scan	LED	❍	×
6	Even pitch pattern (1 by 4): sub scan	LED	❍	×
7	Even pitch pattern (2 by 6): sub scan	LED	❍	×
8	Even pitch pattern (2 by 6): sub scan	LED	❍	×
9	Each color 10% (A4/A4R) density print	LED	Pattern width	×
10	8-color band print	LED	❍	×
11	Even pitch pattern (1 by N-1) sub scan direction gradation	LED	Interval width (N-1)	×
12	Grid pattern	Input process	Line width	❍
13	Dot pattern	Input process	❍	❍
14	256 gradations: sub scan	Input process	None	❍
15	256-gradation pattern (Fixed gradation)	Input process	None	❍
16	256-gradation pattern (Certain gradation) (Gradation specified from external)	Input process	None	❍
17	Whole background (half tone)	Half tone	❍	❍
18	256-gradation pattern (Other dither)	Half tone	None	❍
19	256-gradation pattern (Text dither)	Half tone	None	❍
20	Half background print	LED	❍	×
21	Half background dot print	LED	❍	×
22	1/4 background print	LED	❍	×
23	1/4 background dot print	LED	❍	×

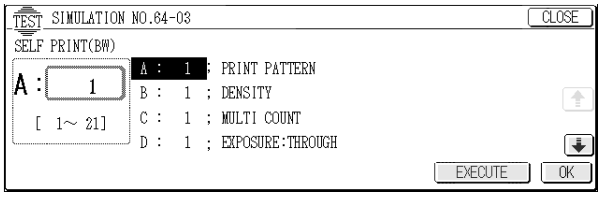

65

65 -01

Purpose	Adjustment
Function (Purpose)	Used to adjust the touch panel (LCD display section) detection position.
Section	Operation (Display, procedure)
Operation/ Procedure	1. Touch the four cross marks. The coordinates at the pressed point are set.

When the coordinates are properly set, the mark "+" on the display turns to gray. When all the four points are pressed, the display returns to the normal display.

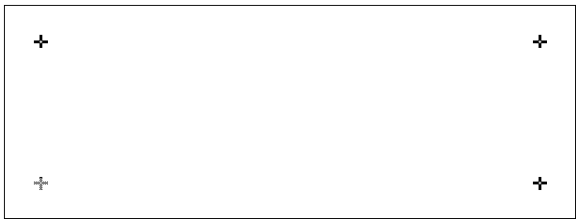

65 -02

Purpose	Adjustment/Setting/Operation data output, check (display, print)
Function (Purpose)	Used to check the result of the touch panel (LCD display) detection position adjustment. (The coordinates are displayed.)
Section	Operation (Display, procedure)
Operation/ Procedure	When the touch panel is pressed, the AD value in each of X and Y directions at that point and the coordinate values are displayed in ( ) as well as the coordinate values of each point. It is based on the coordinates set with SIM 65-1.

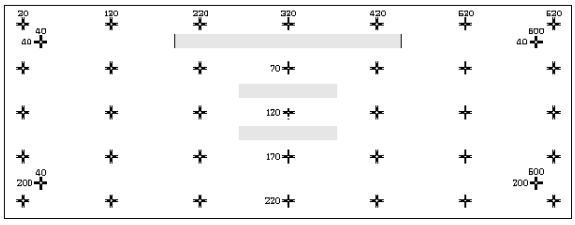

67

67 -01

Purpose	Operation test/check
Function (Purpose)	Used to check the operations of printer DRAM read/write.
Section	Printer
Item	Operation
Operation/ Procedure	When the machine enters the simulation mode, the printer DRAM read/write operation check is started. After completion of check, "ERROR" or "MEMORY SIZE" is displayed. If no memory is installed, "NA" is displayed.

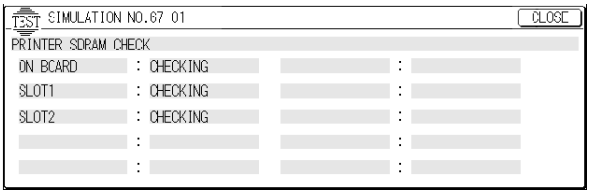

67 -11

Purpose	Setting
Function (Purpose)	Used to set the printer parallel I/F SELECT IN signal.
Section	Printer
Item	Operation
Operation/ Procedure	Enter the set value with the 10-key, and press the [OK] key. When a trouble occurs in communication between PC and the printer by use of the printer parallel I/F, change the setup content of this simulation.

Display		Content	Set range	Default
A	SELECT-IN (0:OFF 1:ON)	Centro I/F SELECT IN signal YES/NO setting	0 – 1	1

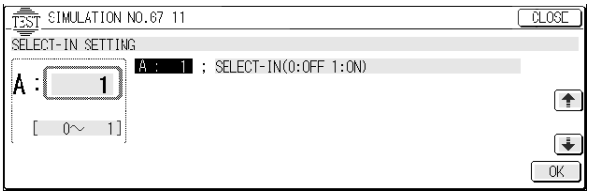

67 -14

Purpose	Version up
Function (Purpose)	Used to perform version up of the firmware. (Printer)
Section	Firmware (Printer)
Item	Operation
Operation/ Procedure	1. When the machine enters the simulation mode, it enters the printer firmware version up mode at the same time.

2. Use "fcopy" command on the PC side to download the firmware file. When the firmware data are normally downloaded and written into the Flash ROM, "COMPLETE" is displayed.

In case of an error, the following message is displayed.

* When the Flash ROM kind is improper:
  "ROM KIND ERROR" is displayed.
* When an error occurs during initializing the Flash ROM:
  "FLASH ERROR" is displayed.
* When an error occurs during verifying:
  "UPDATE ERROR" is displayed.

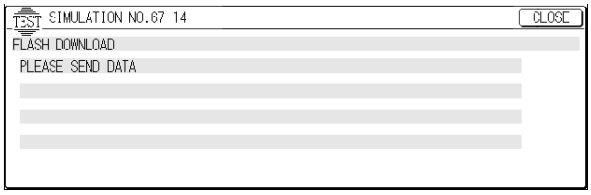

67 -17

Purpose	Data clear
Function (Purpose)	Used to clear NVRAM. (Printer)
Section	Printer
Item	Others
Operation/ Procedure	1. Press the [EXECUTE] key. The confirmation message to clear is displayed. 2. Select YES/NO to clear the NVRAM. YES: Clear NO: Not clear When the printer NVRAM is normally cleared, "COMPLETE" is displayed. In case of an error, "ERROR" is displayed.

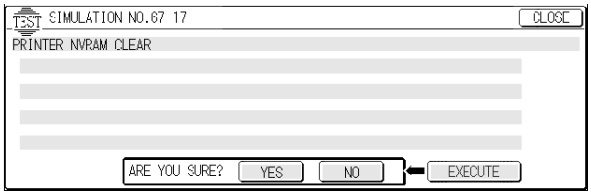

67 -18

Purpose	Data clear
Function (Purpose)	Used to clear the Flash data. (Printer)
Section	Printer
Item	Others
Operation/ Procedure	1. Press the [EXECUTE] key. The confirmation message to clear the Flash data is displayed. 2. Select YES/NO to clear the Flash data. YES: Clear NO: Not clear When the printer Flash data are normally cleared, "COMPLETE" is displayed. In case of an error, "ERROR" is displayed.

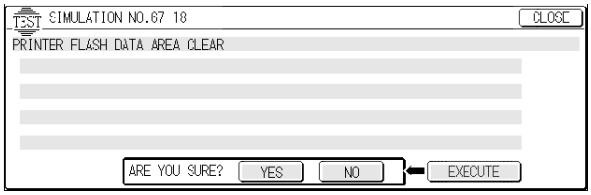

[10] MAINTENANCE LIST

1. Maintenance system table

×: Check (Clean, replace, or adjust as necessary.) ❍: Clean ▲: Replace ∆: Adjust ☆: Lubricate ❑: Shift position

Unit Name	No.	Part name	When calling	50K	100K	150K	200K	250K	300K	350K	400K	Remark
Drum peripheral section	1	Drum (B/W, Color)		▲	▲	▲	▲	▲	▲	▲	▲	
	2	Charging unit		▲	▲	▲	▲	▲	▲	▲	▲	
	3	Cleaner blade		▲	▲	▲	▲	▲	▲	▲	▲	
	4	Toner reception seal		▲	▲	▲	▲	▲	▲	▲	▲	
	5	Drum cartridge		▲	▲	▲	▲	▲	▲	▲	▲	When replacing the unit
Developing section (integrated with toner cartridge)		Toner cartridge	Replaced by user when toner empty (or at the specified distance covered)									
Transfer section	1	Transfer belt		×	▲	×	▲	×	▲	×	▲	Replace at 100K or within 2 years.
	2	Transfer roller		×	▲	×	▲	×	▲	×	▲	
	3	Transfer belt cleaning blade		×	▲	×	▲	×	▲	×	▲	Replace at 100K or within 2 years.
	4	Transfer discharge sheet		×	❍	×	❍	×	❍	×	❍	
	5	Transfer belt cleaning roller		×	▲	×	▲	×	▲	×	▲	
	6	Transfer drive roller		×	×	×	×	×	×	×	×	
	7	Transfer follower roller		×	×	×	×	×	×	×	×	
	8	Transfer cleaning brush		×	×	×	×	×	×	×	×	
	9	Sensors		×	×	×	×	×	×	×	×	
	10	Waste toner tank unit	▲	×	▲	×	▲	×	▲	×	▲	When waste toner full is detected.
	11	Transfer belt unit		×	▲	×	▲	×	▲	×	▲	Replace the unit at 100K or within 2 years.
Fusing section	1	Upper heat roller	×	×	▲	×	▲	×	▲	×	▲	Replace at 100K or within 2 years.
	2	Lower heat roller	×	×	▲	×	▲	×	▲	×	▲	Replace at 100K or within 2 years.
	3	Heat roller gear	×	×	▲	×	▲	×	▲	×	▲	
	4	Heat roller bearing	×	×	▲	×	▲	×	▲	×	▲	
	5	Separation pawl	×	×	▲	×	▲	×	▲	×	▲	
	6	Thermistor	×	×	▲	×	▲	×	▲	×	▲	
	7	Bearings	×	×	×	×	×	×	×	×	×	
	8	Gears	×	☆	☆	☆	☆	☆	☆	☆	☆	
	9	Paper guides	❍	❍	❍	❍	❍	❍	❍	❍	❍	
	10	Paper exit roller	×	×	×	×	×	×	×	×	×	
	11	Fusing unit		×	▲	×	▲	×	▲	×	▲	Replace the unit at 100K or within 2 years.
Optical section	1	CCD, mirror, lens, reflector	❍	❍	❍	❍	❍	❍	❍	❍	❍	
	2	Table glass, sensors	❍	❍	❍	❍	❍	❍	❍	❍	❍	
	3	Shading glass	❍	❍	❍	❍	❍	❍	❍	❍	❍	
	4	Rails	☆	☆	☆	☆	☆	☆	☆	☆	☆	
	5	Drive wire, pulley, pulley belt	×	×	×	×	×	×	×	×	×	
Paper feed section	1	Cassette section paper feed rollers	❍	❍	❍	❍	❍	❍	❍	❍	❍	Replace according to the counter of each paper feed port or within 2 years.
	2	Torque limiter	×		×		×		×		×	
	3	Manual feed section paper feed rollers	❍	×	×	×	×	×	×	×	×	Replace according to the counter of each paper feed port or within 2 years.
	4	Torque limiter	×	×	×	×	×	×	×	×	×	
Transport section	5	Transport rollers	❍	❍	❍	❍	❍	❍	❍	❍	❍	
	6	Transport paper guides	❍	❍	❍	❍	❍	❍	❍	❍	❍	
Image-related sections			×	×	×	×	×	×	×	×	×	
LED	1	LED lens	❍	❍	❍	❍	❍	❍	❍	❍	❍	
Filters	1	Ozone filter	×	▲	▲	▲	▲	▲	▲	▲	▲	
	2	Sub ozone filter	×	▲	▲	▲	▲	▲	▲	▲	▲	
Drive section	3	Gears	☆	☆	☆	☆	☆	☆	☆	☆	☆	
	4	Belts	×	×	×	×	×	×	×	×	×	
Others	5	Sensors	×		×		×		×		×	

2. List

A. Drum peripheral section

×: Check (Clean, replace, or adjust as necessary.) ❍: Clean ▲: Replace ∆: Adjust ☆: Lubricate ❑: Shift position

Unit Name	No.	Part name	When calling	50K	100K	150K	200K	250K	300K	350K	400K	Remark
Drum peripheral section	1	Drum (B/W, Color)		▲	▲	▲	▲	▲	▲	▲	▲	
	2	Charging unit		▲	▲	▲	▲	▲	▲	▲	▲	
	3	Cleaner blade		▲	▲	▲	▲	▲	▲	▲	▲	
	4	Toner reception seal		▲	▲	▲	▲	▲	▲	▲	▲	
	5	Drum cartridge		▲	▲	▲	▲	▲	▲	▲	▲	When replacing the unit

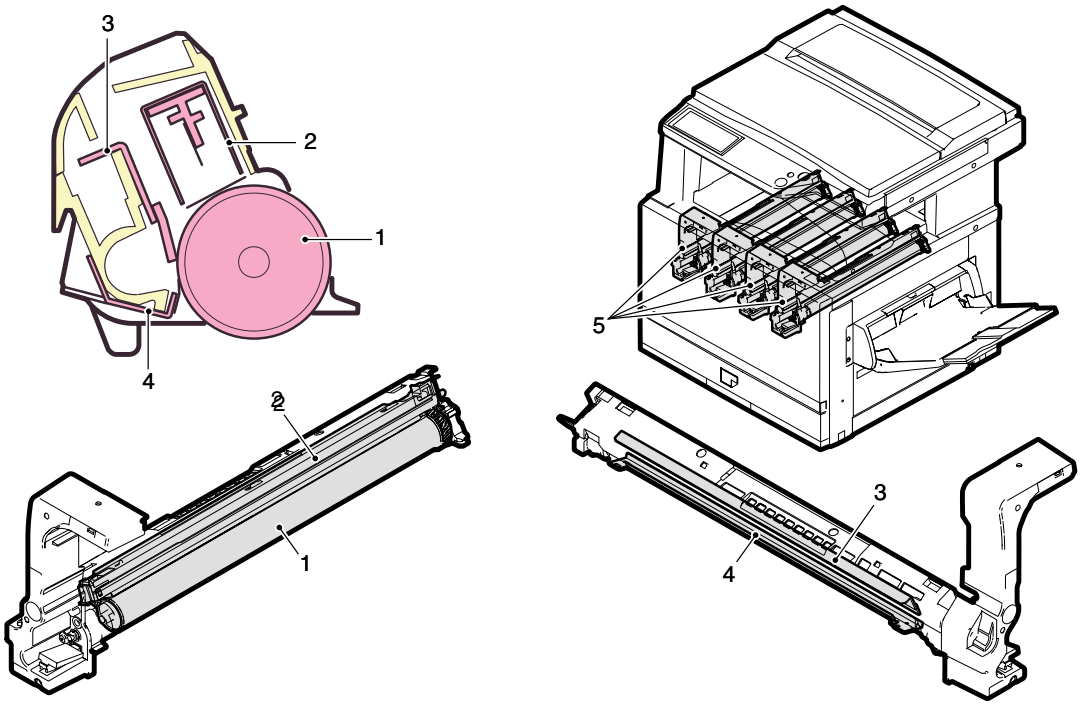

B. Developing section

×: Check (Clean, replace, or adjust as necessary.) ❍: Clean ▲: Replace ∆: Adjust ☆: Lubricate ❑: Shift position

Unit Name	No.	Part name	When calling	50K	100K	150K	200K	250K	300K	350K	400K	Remark
Developing section (integrated with toner cartridge)		Toner cartridge	Replaced by user when toner empty (or at the specified distance covered)									

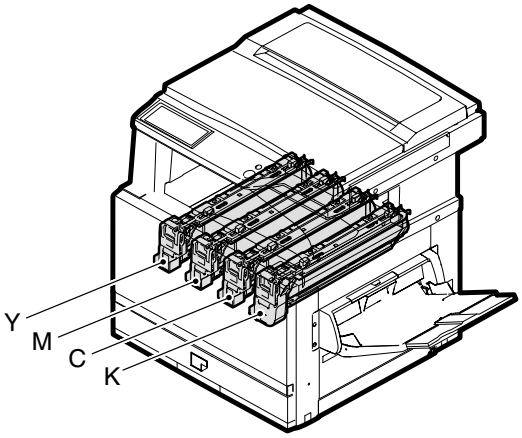

C. Transfer section

×: Check (Clean, replace, or adjust as necessary.) ❍: Clean ▲: Replace ∆: Adjust ☆: Lubricate ❑: Shift position

Unit Name	No.	Part name	When calling	50K	100K	150K	200K	250K	300K	350K	400K	Remark
Transfer section	1	Transfer belt		×	▲	×	▲	×	▲	×	▲	Replace at 100K or within 2 years.
	2	Transfer roller		×	▲	×	▲	×	▲	×	▲	
	3	Transfer belt cleaning blade		×	▲	×	▲	×	▲	×	▲	Replace at 100K or within 2 years.
	4	Transfer discharge sheet		×	❍	×	❍	×	❍	×	❍	
	5	Transfer belt cleaning roller		×	▲	×	▲	×	▲	×	▲	
	6	Transfer drive roller		×	×	×	×	×	×	×	×	
	7	Transfer follower roller		×	×	×	×	×	×	×	×	
	8	Transfer cleaning brush		×	×	×	×	×	×	×	×	
	9	Sensors		×	×	×	×	×	×	×	×	
	10	Waste toner tank unit	▲	×	▲	×	▲	×	▲	×	▲	When waste toner full is detected.
	11	Transfer belt unit		×	▲	×	▲	×	▲	×	▲	Replace the unit at 100K or within 2 years.

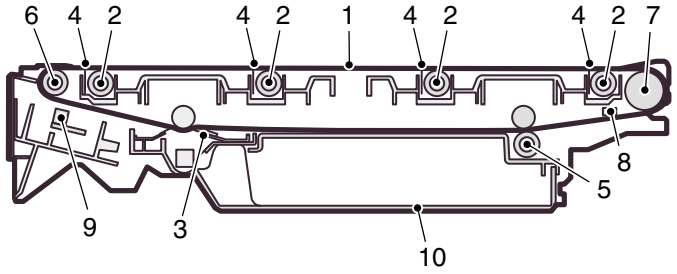

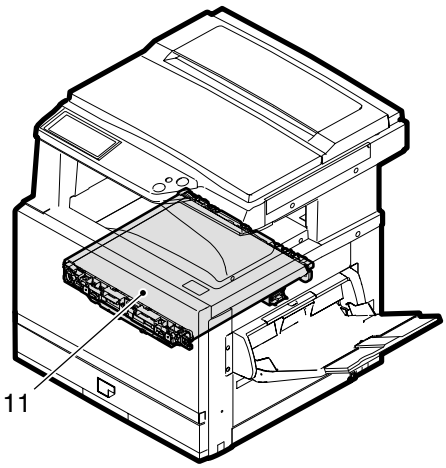

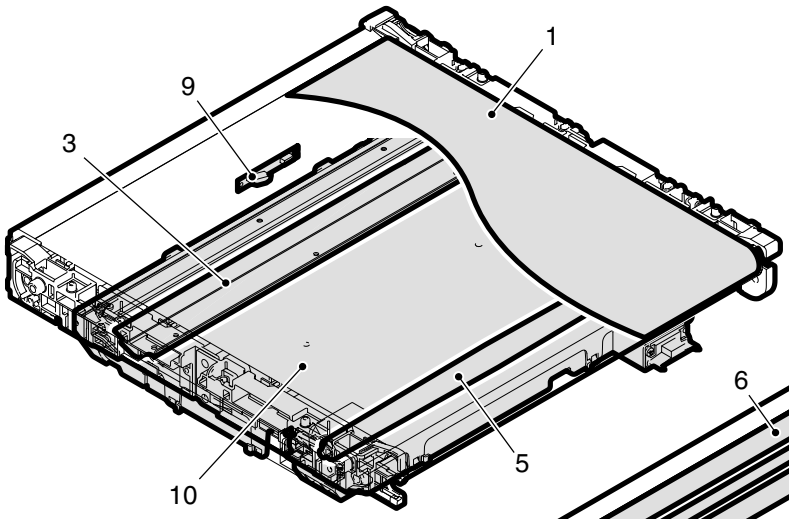

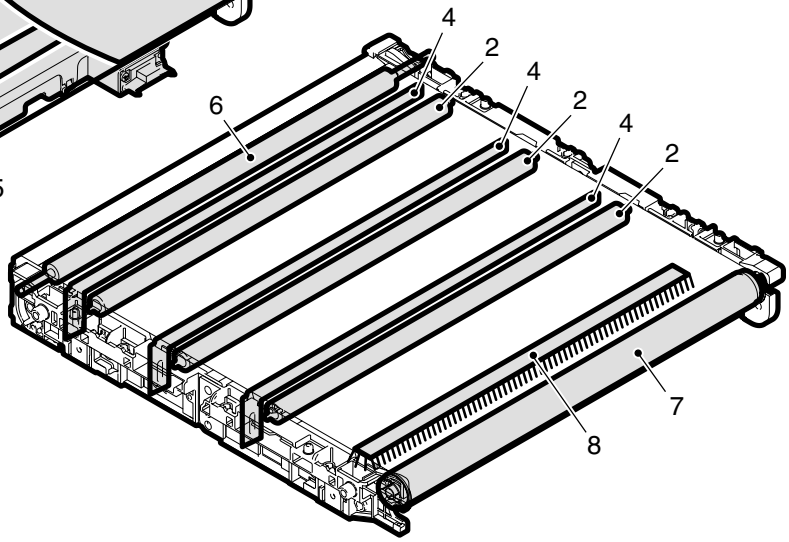

D. Fusing section

×: Check (Clean, replace, or adjust as necessary.) ❍: Clean ▲: Replace ∆: Adjust ☆: Lubricate ❑: Shift position

Unit Name	No.	Part name	When calling	50K	100K	150K	200K	250K	300K	350K	400K	Remark
Fusing section	1	Upper heat roller	×	×	▲	×	▲	×	▲	×	▲	Replace at 100K or within 2 years.
	2	Lower heat roller	×	×	▲	×	▲	×	▲	×	▲	Replace at 100K or within 2 years.
	3	Heat roller gear	×	×	▲	×	▲	×	▲	×	▲	
	4	Heat roller bearing	×	×	▲	×	▲	×	▲	×	▲	
	5	Separation pawl	×	×	▲	×	▲	×	▲	×	▲	
	6	Thermistor	×	×	▲	×	▲	×	▲	×	▲	
	7	Bearings	×	×	×	×	×	×	×	×	×	
	8	Gears	×	☆	☆	☆	☆	☆	☆	☆	☆	
	9	Paper guides	❍	❍	❍	❍	❍	❍	❍	❍	❍	
	10	Paper exit roller	×	×	×	×	×	×	×	×	×	
	11	Fusing unit		×	▲	×	▲	×	▲	×	▲	Replace the unit at 100K or within 2 years.

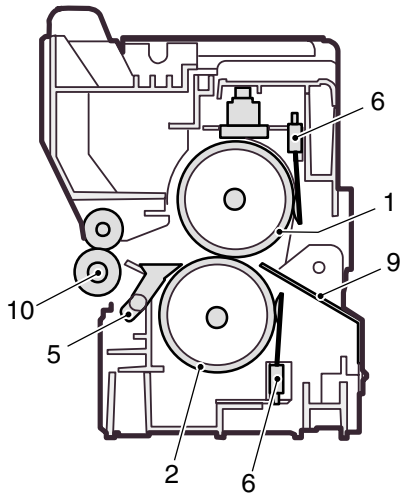

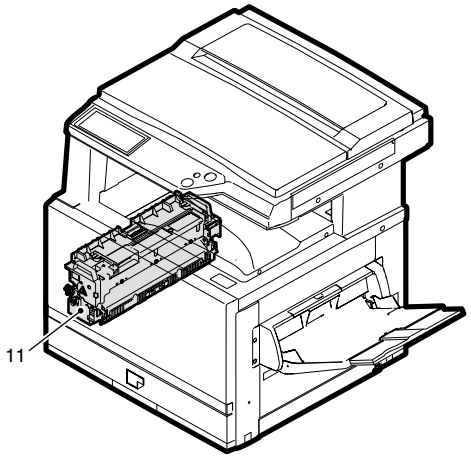

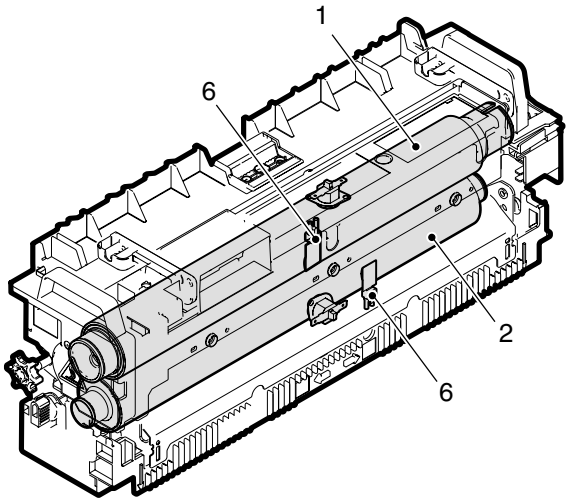

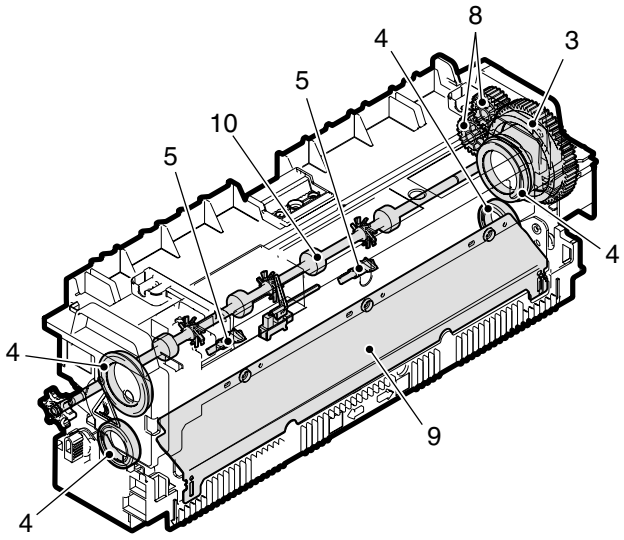

E. Optical section (Scanner section)

×: Check (Clean, replace, or adjust as necessary.) ❍: Clean ▲: Replace ∆: Adjust ☆: Lubricate ❑: Shift position

Unit Name	No.	Part name	When calling	50K	100K	150K	200K	250K	300K	350K	400K	Remark
Optical section	1	CCD, mirror, lens, reflector	❍	❍	❍	❍	❍	❍	❍	❍	❍	
	2	Table glass, sensors	❍	❍	❍	❍	❍	❍	❍	❍	❍	
	3	Shading glass	❍	❍	❍	❍	❍	❍	❍	❍	❍	
	4	Rails	☆	☆	☆	☆	☆	☆	☆	☆	☆	
	5	Drive wire, pulley, pulley belt	×	×	×	×	×	×	×	×	×	

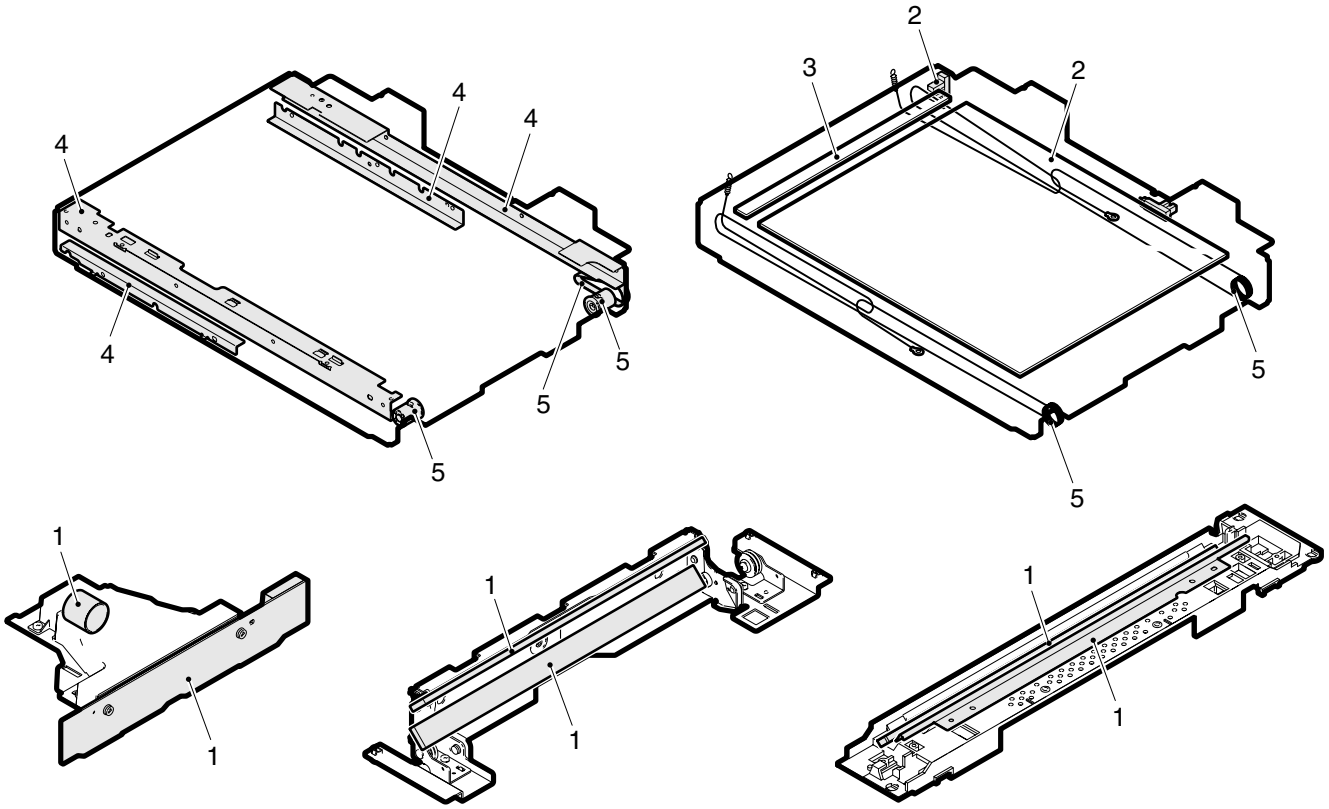

F. Paper feed section, transport section

×: Check (Clean, replace, or adjust as necessary.) ❍: Clean ▲: Replace ∆: Adjust ☆: Lubricate ❑: Shift position

Unit Name	No.	Part name	When calling	50K	100K	150K	200K	250K	300K	350K	400K	Remark
Paper feed section	1	Cassette section paper feed rollers	❍	❍	❍	❍	❍	❍	❍	❍	❍	Replace according to the counter of each paper feed port or within 2 years.
	2	Torque limiter	×		×		×		×		×	
	3	Manual feed section paper feed rollers	❍	×	×	×	×	×	×	×	×	Replace according to the counter of each paper feed port or within 2 years.
	4	Torque limiter	×	×	×	×	×	×	×	×	×	
Transport section	5	Transport rollers	❍	❍	❍	❍	❍	❍	❍	❍	❍	
	6	Transport paper guides	❍	❍	❍	❍	❍	❍	❍	❍	❍	

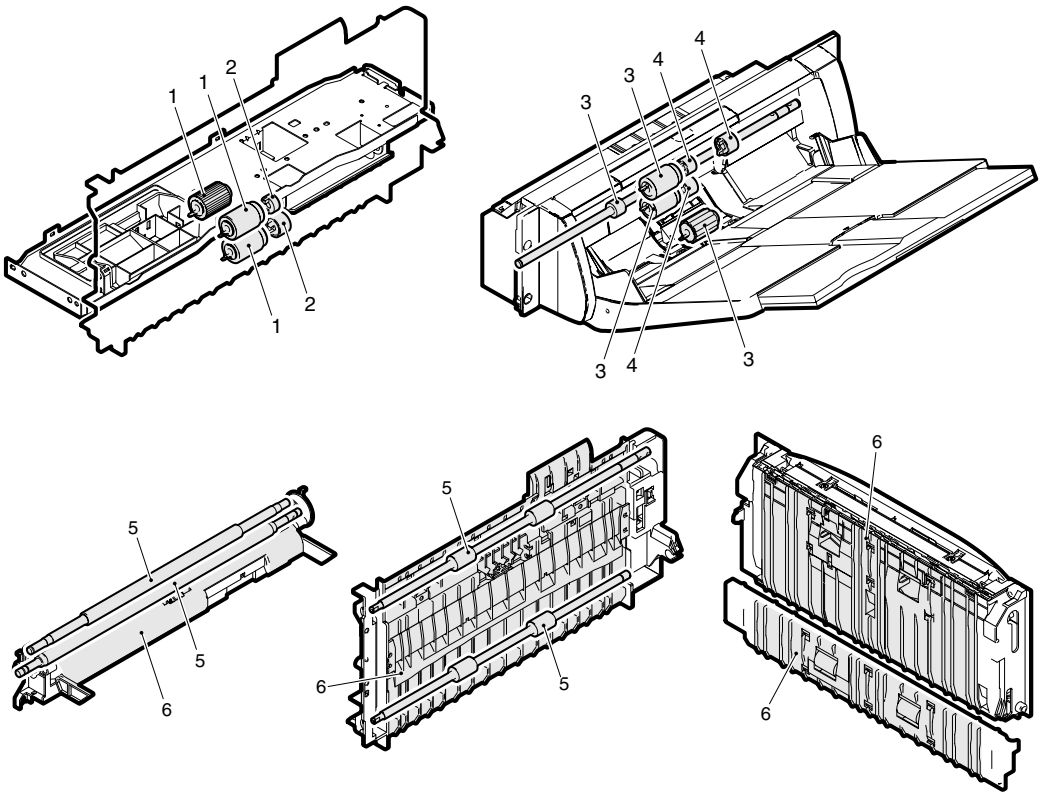

G. LED

×: Check (Clean, replace, or adjust as necessary.) ❍: Clean ▲: Replace ∆: Adjust ☆: Lubricate ❑: Shift position

Unit Name	No.	Part name	When calling	50K	100K	150K	200K	250K	300K	350K	400K	Remark
LED	1	LED lens	❍	❍	❍	❍	❍	❍	❍	❍	❍	

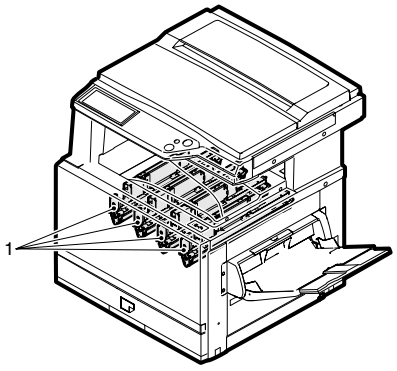

H. Filters, drive section, others

×: Check (Clean, replace, or adjust as necessary.) ❍: Clean ▲: Replace ∆: Adjust ☆: Lubricate ❑: Shift position

Unit Name	No.	Part name	When calling	50K	100K	150K	200K	250K	300K	350K	400K	Remark
Filters	1	Ozone filter	×	▲	▲	▲	▲	▲	▲	▲	▲	
	2	Sub ozone filter	×	▲	▲	▲	▲	▲	▲	▲	▲	
Drive section	3	Gears	☆	☆	☆	☆	☆	☆	☆	☆	☆	
	4	Belts	×	×	×	×	×	×	×	×	×	
Others	5	Sensors	×		×		×		×		×	

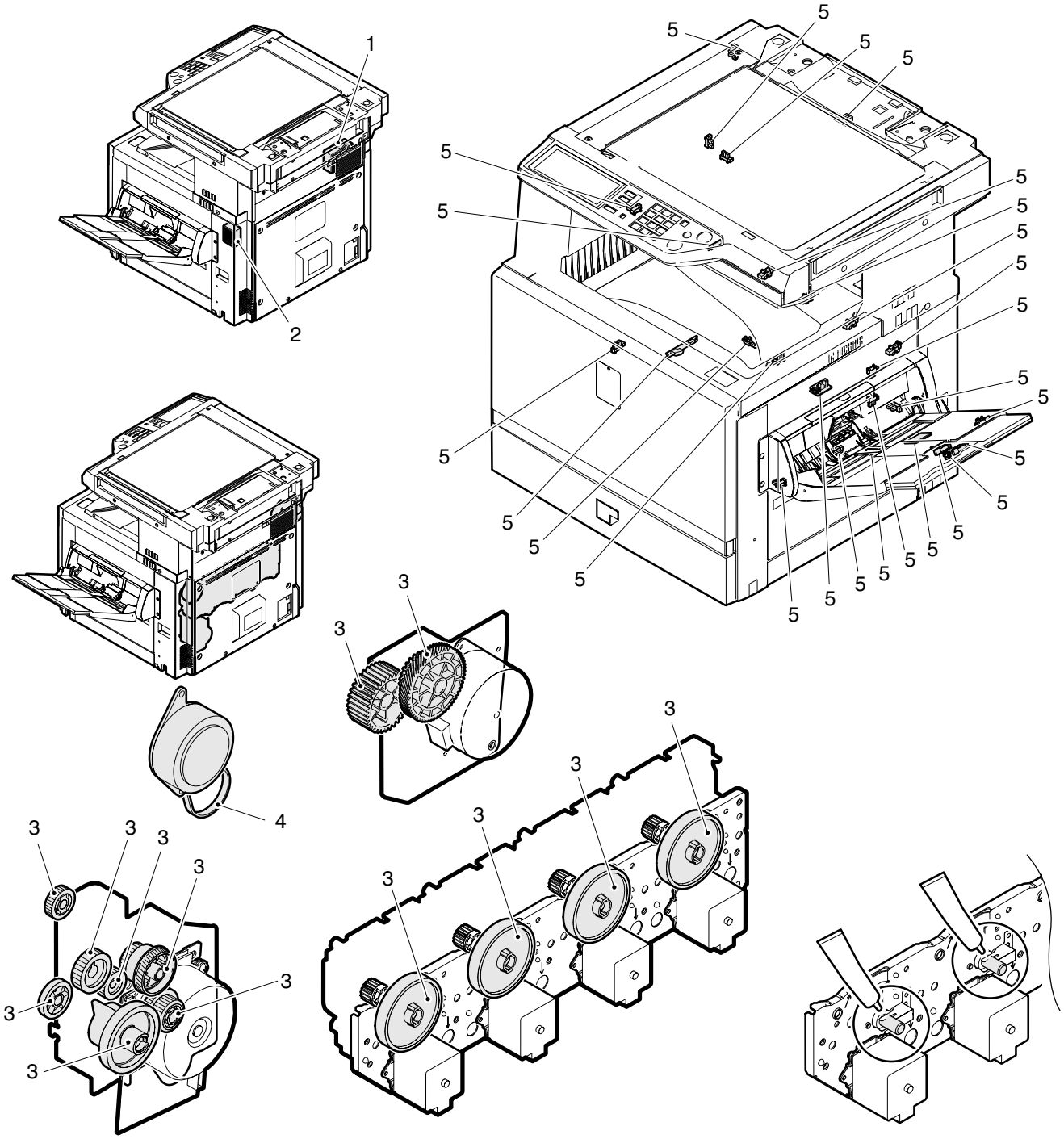

[11] TROUBLESHOOTING

1. Outline

In case of a trouble in the machine, or when a consumable part has nearly reached or already reach the lifetime, the machine detects it, analyze it, and displays it on the display section and notifies the user and the serviceman by a voice message.

The user and the serviceman are bale to perform the proper counter-measures according to a voice message. In case of a trouble, the machine is stopped to restrict damage to a minimum in addition to a voice message.

2. Functions and purposes

1) Assures safety. (The machine is stopped when a trouble is detected.)
2) Restricts damage to a minimum. (The machine is stopped when a trouble is detected.)
3) By displaying the trouble content, the trouble position can be identified immediately and accurately. (An accurate repair work can be performed, improving the repair efficiency.)
4) By providing a preparatory warning when the lifetime of a consumable part is nearly reached, arrangement of the consumable part can be made in advance. (Stopping the machine by exhaustion of a consumable part is avoidable.)

3. Kinds of self diagnostic messages

The self diagnostic messages are classified as follows:

Class 1	User	Troubles and warning messages (paper jam, consumable part life expiration, etc.) which can be processed by the user
	Service	Troubles and warning messages (motor trouble, maintenance, etc.) which can be processed only by a serviceman
	Other	—
Class 2	Warning	Warning messages (consumable part life expiration, etc.) for the user, which are not directly related to any machine trouble.
	Trouble	Related to a machine trouble. The machine is stopped.
	Other	—

4. Self diagnostic operation

A. Self diagnostic operation and work flow

The machine always monitors its own status.

When the machine detects a trouble, it stops operations and displays a trouble message.

A warning message is provided mainly when a consumable part is nearly or completely exhausted.

When a warning message is provided, the machine may be stopped or may not be stopped depending on the message.

The trouble and warning messages are indicated with the LCD and lamps.

Some trouble messages may be automatically cleared after removing the trouble, and some must be cleared with the simulation.

Some warning messages of consumable parts are automatically cleared when the trouble is repaired. Some other warning messages must be cleared by a simulation.

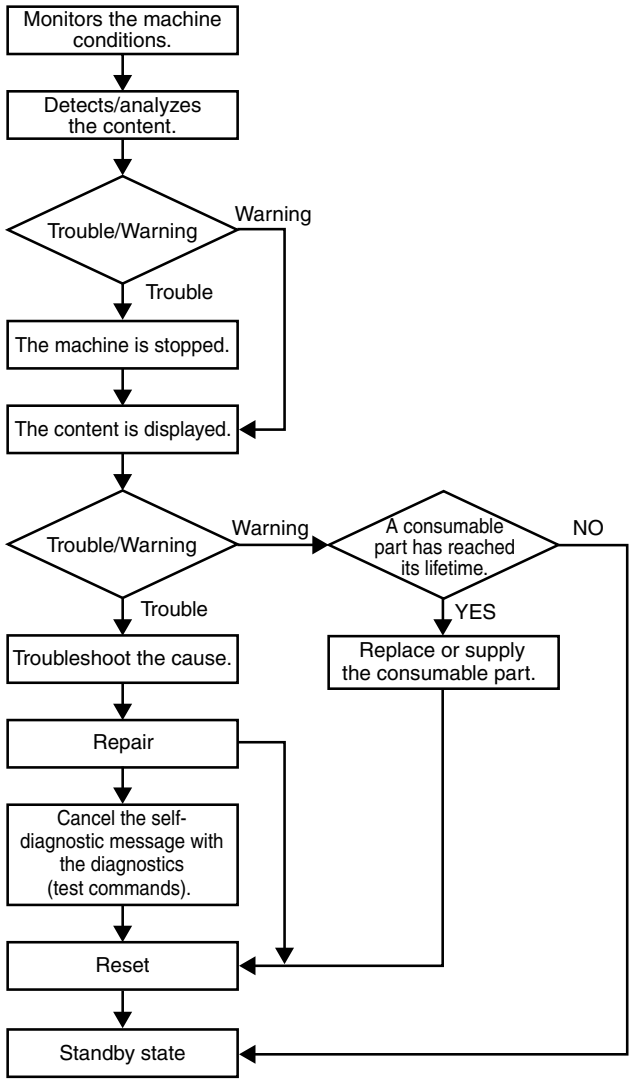

5. List

Model	Main code	Sub code	Content
AR-C260 AR-C260M	C2	10	Image density sensor error/Transfer charger error (Black)
	E7	01	Image data memory trouble
		10	Shading trouble (Black correction)
		11	Shading trouble (White correction)
		20	LED controller initial trouble (Black)
		21	LED controller initial trouble (Cyan)
		22	LED controller initial trouble (Magenta)
		23	LED controller initial trouble (Yellow)
		24	LED controller output trouble (Black)
		25	LED controller output trouble (Cyan)
		26	LED controller output trouble (Magenta)
		27	LED controller output trouble (Yellow)
		28	LED control ASIC connection abnormality
		40	Color correction data writing abnormality
		41	Color correction data transfer abnormality
		80	ICU-SCN communication trouble (ICU detection)
		90	ICU-PCU communication trouble (ICU detection)
	F1	00	Finisher communication trouble (PCU detection)
		02	Finisher transport motor trouble (Finisher detection)
		03	Finisher paddle motor trouble
		06	Finisher slide motor trouble
		10	Finisher staple motor abnormality (Finisher detection)
		11	Finisher bundle process motor abnormality (Finisher detection)
		15	Finisher tray lift motor abnormality (Finisher detection)
		19	Finisher front alignment motor abnormality (Finisher detection)
		20	Finisher rear alignment motor abnormality (Finisher detection)
		31	Finisher fold sensor trouble
		32	Finisher punch unit communication trouble
		33	Finisher punch side registration motor trouble
		34	Finisher punch motor trouble
		35	Finisher punch side registration sensor trouble
		36	Finisher punch registration sensor trouble
		37	Finisher/sorter backup RAM trouble
		38	Finisher punch backup RAM trouble
		39	Finisher punch dust sensor trouble
		40	Finisher punch power disconnection trouble
		83	Sorter guide bar oscillation motor (M3) lock
		89	Sorter bin shift motor lock (M1)
		91	Sorter bin paper sensor automatic adjustment trouble

Model	Main code	Sub code	Content
AR-C260 AR-C260M	F2	15	Drum unit initial detection trouble (Black)
		16	Drum unit initial detection trouble (Cyan)
		17	Drum unit initial detection trouble (Magenta)
		18	Drum unit initial detection trouble (Yellow)
		19	Transfer unit initial detection trouble
		39	Process thermistor breakdown
		40	Toner empty sensor abnormality (Black)
		41	Toner empty sensor abnormality (Cyan)
		42	Toner empty sensor abnormality (Magenta)
		43	Toner empty sensor abnormality (Yellow)
		44	Black image density sensor trouble (Transfer belt surface reflection ratio abnormality)
		45	Color image density sensor trouble (Calibration plate surface reflection ratio abnormality)
		58	Process humidity sensor breakdown
		70	Developing unit improper cartridge detection (Black)
		71	Developing unit improper cartridge detection (Cyan)
		72	Developing unit improper cartridge detection (Magenta)
		73	Developing unit improper cartridge detection (Yellow)
		74	Developing unit CRUM trouble (Black)
		75	Developing unit CRUM trouble (Cyan)
		76	Developing unit CRUM trouble (Magenta)
		77	Developing unit CRUM trouble (Yellow)
		78	Trouble of image density sensor for registration (Transfer belt surface reflection ratio abnormality)
		80	Half-tone process control 1st batch error (Black)
		81	Half-tone process control 1st batch error (Cyan)
		82	Half-tone process control 1st batch error (Magenta)
		83	Half-tone process control 1st batch error (Yellow)
		84	Half-tone process control 2nd batch error (Black)
		85	Half-tone process control 2nd batch error (Cyan)
		86	Half-tone process control 2nd batch error (Magenta)
		87	Half-tone process control 2nd batch error (Yellow)
		90	Half-tone process control limit error
	F3	12	Cassette 1 lift up trouble
	F9	00	ICU-PRT communication trouble (ICU detection)
		01	PRT DRAM trouble
		02	NIC port check error
		20	HDD trouble (PRT controller detection)
	H2	00	Thermistor open (HL1)
		01	Thermistor open (HL2)
	H3	00	Fusing section high temperature trouble (HL1)
		01	Fusing section high temperature trouble (HL2)

Model	Main code	Sub code	Content
AR-C260 AR-C260M	H4	00	Fusing section low temperature trouble (HL1)
		01	Fusing section low temperature trouble (HL2)
	H5	01	Five continuous detections of POD1 not-reached jam
	H8	01	Fusing unit initial detection trouble
	L1	00	Mirror feed trouble
	L3	00	Mirror return trouble
	L4	02	Paper feed motor lock trouble
		06	Transfer belt lift motor trouble
		07	Transfer belt motor trouble
		11	Shift motor trouble
	L8	01	Full wave signal not provided
		02	Full wave signal width abnormality
		04	Main power switch abnormality detection
	PF	00	RIC copy inhibit signal reception
	U0	00	ICU-OPE communication trouble (ICU/OPE detection)
	U1	02	RTC read trouble
	U2	00	EEPROM read/write error (ICU detection)
		11	EEPROM check sum error (ICU detection)
		30	Production No. data discrepancy (ICU ⇔ ICU)
		80	EEPROM read/write error (SCN detection)
		81	EEPROM check sum error (SCN detection)
		90	EEPROM read/write error (PCU detection)
		91	EEPROM check sum error (PCU detection)
	U4	02	ADU alignment plate operation abnormality
	U5	00	ADF communication trouble
		01	ADF resist sensor defect
		02	ADF repulsion sensor defect
		03	ADF timing sensor defect
		11	Paper feed motor operation abnormality
	U6	00	Desk communication trouble
		01	Desk tray 1 lift motor trouble
		02	Desk tray 2 lift motor trouble
		03	Desk tray 3 lift motor trouble
		10	Desk transport motor trouble
	U7	00	RIC communication trouble

6. Details

Main code	Sub code	Title	**Image density sensor error/ Transfer charger error (Black)**	
C2	**10**	Display	Lamp/Message	
		Phenomenon	Detail	Black image density sensor trouble /Transfer trouble (Black) /The deference between the transfer belt surface detection level and the black toner patch density detection level is normal. (Judged in black image density sensor calibration)
			Section	Transfer
		Case 1	Cause	Black image density sensor trouble
			Check & Remedy	Black density image sensor cleaning, replacement
		Case 2	Cause	Transfer voltage trouble
			Check & Remedy	Check and adjust the transfer voltage.
		Case 3	Cause	High voltage PWB trouble
			Check & Remedy	Replace the high voltage PWB.
		Case 4	Cause	Transfer unit trouble
			Check & Remedy	Check the transfer belt surface for dirt and scratches. Replace the transfer belt, replace the cleaning blade, replace the transfer unit.
		Case 5	Cause	PCU PWB trouble
			Check & Remedy	PCU PWB replacement
		Case 6	Cause	Photoconductor unit trouble
			Check & Remedy	Replace the photoconductor unit.
		Case 7	Cause	Developing unit trouble
			Check & Remedy	Replace the developing unit
		Case 8	Cause	Connector, harness trouble (PCU PWB, high voltage PWB, image density sensor, photoconductor unit, transfer unit, developing unit)
			Check & Remedy	Check contact. Replace the harness. Replace the PWB.

Main code	Sub code	Title	Image data memory trouble	
E7	01	Display	Lamp/Message	
		Phenomenon	Detail	The ICU image data memory (SDRAM) cannot be detected as 256MB or more. The required SDRAM capacity for the model is not provided.
			Section	ICU PWB
		Case 1	Cause	The SDRAM of ICU PWB is not installed. The SDRAM of ICU PWB is improperly installed.
			Check & Remedy	Check installation of the SDRAM of ICU ASIC PWB.
		Case 2	Cause	The SDRAM of ICU PWB does not operate properly.
			Check & Remedy	Use SIM 60-01 to check the capacity of the SDRAM. Replace the SDRAM of ICU PWB.
		Case 3	Cause	ICU PWB abnormality
			Check & Remedy	Replace the ICU PWB.

Main code	Sub code	Title	Shading trouble (Black correction)	
E7	10	Display	Lamp/Message	
		Phenomenon	Detail	CCD black reading level abnormality when the copy lamp is off.
			Section	CCD unit
		Case 1	Cause	Improper installation of the flat cable to the CCD unit.
			Check & Remedy	Check installation of the flat cable to the CCD unit.
		Case 2	Cause	CCD unit abnormality
			Check & Remedy	Check the CCD unit.
		Case 3	Cause	MFP PWB abnormality
			Check & Remedy	Check the MFP PWB.

Main code	Sub code	Title	Shading trouble (White correction)	
E7	11	Display	Lamp/Message	
		Phenomenon	Detail	CCD white reading level abnormality when the copy lamp is off.
			Section	CCD unit
		Case 1	Cause	Improper installation of the flat cable to the CCD unit.
			Check & Remedy	Check installation of the flat cable to the CCD unit.
		Case 2	Cause	Dirt on the mirror, the lens, or the reference white plate.
			Check & Remedy	Clean the mirror, the lens, or the reference white plate.
		Case 3	Cause	CCD unit abnormality
			Check & Remedy	Check the CCD unit.
		Case 4	Cause	MFP PWB abnormality
			Check & Remedy	Check the MFP PWB.

Main code	Sub code	Title	LED controller initial trouble (Black)	
E7	20	Display	Lamp/Message	
		Phenomenon	Detail	The initial process of the LED controller cannot be completed properly.
			Section	LED/ICU PWB
		Case 1	Cause	Disconnection of the LED head connector.
			Check & Remedy	Check connection of the LED head connector.
		Case 2	Cause	Disconnection of the harness inside the LED head.
			Check & Remedy	Replace the LED head unit.
		Case 3	Cause	ICU PWB abnormality
			Check & Remedy	Replace the ICU PWB.

Main code	Sub code	Title	LED controller initial trouble (Cyan)	
E7	21	Display	Lamp/Message	
		Phenomenon	Detail	The initial process of the LED controller cannot be completed properly.
			Section	LED/ICU PWB
		Case 1	Cause	Disconnection of the LED head connector.
			Check & Remedy	Check connection of the LED head connector
		Case 2	Cause	Disconnection of the harness inside the LED head.
			Check & Remedy	Replace the LED head unit.
		Case 3	Cause	ICU PWB abnormality
			Check & Remedy	Replace the ICU PWB.

Main code	Sub code	Title	LED controller initial trouble (Magenta)	
E7	22	Display	Lamp/Message	
		Phenomenon	Detail	The initial process of the LED controller cannot be completed properly.
			Section	LED/ICU PWB
		Case 1	Cause	Disconnection of the LED head connector.
			Check & Remedy	Check connection of the LED head connector
		Case 2	Cause	Disconnection of the harness inside the LED head.
			Check & Remedy	Replace the LED head unit.
		Case 3	Cause	ICU PWB abnormality
			Check & Remedy	Replace the ICU PWB.

Main code	Sub code	Title	LED controller initial trouble (Yellow)	
E7	23	Display	Lamp/Message	
		Phenomenon	Detail	The initial process of the LED controller cannot be completed properly.
			Section	LED/ICU PWB
		Case 1	Cause	Disconnection of the LED head connector
			Check & Remedy	Check connection of the LED head connector.
		Case 2	Cause	Disconnection of the harness inside the LED head.
			Check & Remedy	Replace the LED head unit.
		Case 3	Cause	ICU PWB abnormality
			Check & Remedy	Replace the ICU PWB.

Main code	Sub code	Title	LED controller output trouble (Magenta)	
E7	26	Display	Lamp/Message	
		Phenomenon	Detail	When printing, the print end signal for each page is not properly provided.
			Section	LED/ICU PWB
		Case 1	Cause	Disconnection of the LED head connector.
			Check & Remedy	Check connection of the LED head connector.
		Case 2	Cause	Disconnection of the harness inside the LED head.
			Check & Remedy	Replace the LED head unit.
		Case 3	Cause	ICU PWB abnormality
			Check & Remedy	Replace the ICU PWB.

Main code	Sub code	Title	LED controller output trouble (Black)	
E7	24	Display	Lamp/Message	
		Phenomenon	Detail	When printing, the print end signal for each page is not properly provided.
			Section	LED/ICU PWB
		Case 1	Cause	Disconnection of the LED head connector.
			Check & Remedy	Check connection of the LED head connector.
		Case 2	Cause	Disconnection of the harness inside the LED head.
			Check & Remedy	Replace the LED head unit.
		Case 3	Cause	ICU PWB abnormality
			Check & Remedy	Replace the ICU PWB.

Main code	Sub code	Title	LED controller output trouble (Yellow)	
E7	27	Display	Lamp/Message	
		Phenomenon	Detail	When printing, the print end signal for each page is not properly provided.
			Section	LED/ICU PWB
		Case 1	Cause	Disconnection of the LED head connector
			Check & Remedy	Check connection of the LED head connector.
		Case 2	Cause	Disconnection of the harness inside the LED head.
			Check & Remedy	Replace the LED head unit
		Case 3	Cause	ICU PWB abnormality
			Check & Remedy	Replace the ICU PWB.

Main code	Sub code	Title	LED controller output trouble (Cyan)	
E7	25	Display	Lamp/Message	
		Phenomenon	Detail	When printing, the print end signal for each page is not properly provided.
			Section	LED/ICU PWB
		Case 1	Cause	Disconnection of the LED head connector.
			Check & Remedy	Check connection of the LED head connector.
		Case 2	Cause	Disconnection of the harness inside the LED head.
			Check & Remedy	Replace the LED head unit.
		Case 3	Cause	ICU PWB abnormality
			Check & Remedy	Replace the ICU PWB.

Main code	Sub code	Title	LED control ASIC connection abnormality	
E7	28	Display	Lamp/Message	
		Phenomenon	Detail	Access error between the PCU PWB CPU and the LED control ASIC
			Section	ICU/PCU PWB
		Case 1	Cause	Disconnection of the ICU/ PCU PWB communication connector
			Check & Remedy	Check connection of the ICU/PCU PWB communication connector
		Case 2	Cause	ICU/PCU PWB communication harness trouble.
			Check & Remedy	Check the ICU/PCU PWB communication harness.
		Case 3	Cause	ICU PWB/PCU PWB trouble
			Check & Remedy	Check grounding of the machine. Replace the ICU PWB or the PCU PWB.

Main code	Sub code	Title	Color correction data write error	
E7	40	Display	Lamp/Message	
		Phenomenon	Detail	Data write error to the Nand-Flash for holding color correction data
			Section	MFP PWB
		Case 1	Cause	Color correction data rewrite error
			Check & Remedy	Perform rewriting of color correction data again.
		Case 2	Cause	MFP PWB trouble
			Check & Remedy	Replace the MFP PWB.

Main code	Sub code	Title	Color correction data transfer abnormality	
E7	41	Display	Lamp/Message	
		Phenomenon	Detail	Data transfer error from the Nand-Flash for holding color correction data to the FC-RAM for holding color correction image process
			Section	MFP PWB
		Case 1	Cause	MFP PWB trouble
			Check & Remedy	Replace the MFP PWB.

Main code	Sub code	Title	ICU-SCN communication trouble (ICU detection)	
E7	80	Display	Lamp/Message	
		Phenomenon	Detail	Communication establishment error, framing, parity, protocol error
			Section	ICU/MFP PWB
		Case 1	Cause	Disconnection of the ICU/ MFP PWB scanner communication connector. Defective harness of the ICU PWB and the MFP PWB.
			Check & Remedy	Check connection of the ICU PWB and the MFP PWB. Check the harness.
		Case 2	Cause	ICU/MFP PWB trouble
			Check & Remedy	Check grounding of the machine. Replace the ICU PWB or the MFP PWB.

Main code	Sub code	Title	ICU-PCU communication trouble (ICU detection)	
E7	90	Display	Lamp/Message	
		Phenomenon	Detail	Communication establishment error, framing, parity, protocol error
			Section	ICU/PCU PWB
		Case 1	Cause	Disconnection of the ICU/ PCU PWB scanner communication connector. Defective harness of the ICU PWB and the PCU PWB.
			Check & Remedy	Check connection of the ICU PWB and the PCU PWB. Check the harness.
		Case 2	Cause	ICU/PCU PWB trouble
			Check & Remedy	Check grounding of the machine. Replace the ICU PWB or the PCU PWB.

Main code	Sub code	Title	Finisher communication trouble (Machine detection)	
F1	00	Display	Lamp/Message	
		Phenomenon	Detail	Communication line test error when turning on the power or after canceling the exclusive simulation. Communication error with the finisher.
			Section	PCU PWB and finisher
		Case 1	Cause	Disconnection of the PCU-finisher connector, defective contact or disconnection of the harness.
			Check & Remedy	Check the connector and the harness of the communication line.
		Case 2	Cause	Finisher control PWB trouble
			Check & Remedy	Replace the finisher control PWB.
		Case 3	Cause	Control PWB (PCU) trouble
			Check & Remedy	Replace the PCU PWB.
		Case 4	Cause	Malfunctions by noises
			Check & Remedy	—
		Common	Cancel method	Can be canceled by turning OFF/ON the power.

Main code	Sub code	Title	Finisher transport motor trouble (Finisher detection)	
F1	02	Display	Lamp/Message	
		Phenomenon	Detail	Transport motor drive trouble
			Section	Transport
		Case 1	Cause	Motor lock
			Check & Remedy	Use SIM 3-3 to check the transport motor operation.
		Case 2	Cause	Motor RPM abnormality
			Check & Remedy	Same as Case 1.
		Case 3	Cause	Over current to the motor
			Check & Remedy	Same as Case 1.
		Case 4	Cause	Console finisher control PWB trouble
			Check & Remedy	Same as Case 1.

Main code	Sub code	Title	Finisher paddle motor trouble	
F1	03	Display	Lamp/Message	
		Phenomenon	Detail	Paddle motor operation trouble
			Section	Finisher
		Case 1	Cause	Motor lock
			Check & Remedy	Use SIM 3-3 to check the motor operation.
		Case 2	Cause	Motor RPM abnormality
			Check & Remedy	Same as Case 1.
		Case 3	Cause	Over current to the motor
			Check & Remedy	Same as Case 1.
		Case 4	Cause	Console finisher control PWB trouble
			Check & Remedy	Same as Case 1.

Main code	Sub code	Title	Finisher slide motor trouble	
F1	06	Display	Lamp/Message	
		Phenomenon	Detail	Slide motor operation trouble
			Section	Finisher
		Case 1	Cause	Motor lock
			Check & Remedy	Use SIM 3-3 to check the motor operation.
		Case 2	Cause	Motor RPM abnormality
			Check & Remedy	Same as Case 1.
		Case 3	Cause	Over current to the motor
			Check & Remedy	Same as Case 1.
		Case 4	Cause	Console finisher control PWB trouble
			Check & Remedy	Same as Case 1.

Main code	Sub code	Title	Finisher staple motor trouble (Finisher detection)	
F1	10	Display	Lamp/Message	
		Phenomenon	Detail	Stapling operation trouble
			Section	Finisher
		Case 1	Cause	Motor lock
			Check & Remedy	Use SIM 3-3 to check the staple motor operation.
		Case 2	Cause	Motor RPM abnormality
			Check & Remedy	Same as Case 1.
		Case 3	Cause	Over current to the motor
			Check & Remedy	Same as Case 1.
		Case 4	Cause	Console finisher control PWB trouble
			Check & Remedy	Same as Case 1.

Main code	Sub code	Title	Finisher bundle process motor trouble (Finisher detection)	
F1	11	Display	Lamp/Message	
		Phenomenon	Detail	Bundle process motor trouble
			Section	Finisher
		Case 1	Cause	Motor lock
			Check & Remedy	Use SIM 3-3 to check the staple motor operation.
		Case 2	Cause	Motor RPM abnormality
			Check & Remedy	Same as Case 1.
		Case 3	Cause	Over current to the motor
			Check & Remedy	Same as Case 1.
		Case 4	Cause	Console finisher control PWB trouble
			Check & Remedy	Same as Case 1.

Main code	Sub code	Title	Finisher tray lift motor trouble (Finisher detection)	
F1	15	Display	Lamp/Message	
		Phenomenon	Detail	Lift motor trouble
			Section	Finisher
		Case 1	Cause	Motor lock
			Check & Remedy	Use SIM 3-3 to check the staple motor operation.
		Case 2	Cause	Motor RPM abnormality
			Check & Remedy	Same as Case 1.
		Case 3	Cause	Over current to the motor
			Check & Remedy	Same as Case 1.
		Case 4	Cause	Console finisher control PWB trouble
			Check & Remedy	Same as Case 1.

Main code	Sub code	Title	Finisher front alignment motor trouble (Finisher detection)	
F1	19	Display	Lamp/Message	
		Phenomenon	Detail	Front alignment motor trouble
			Section	Finisher
		Case 1	Cause	Motor lock
			Check & Remedy	Use SIM 3-3 to check the staple motor operation.
		Case 2	Cause	Motor RPM abnormality
			Check & Remedy	Same as Case 1.
		Case 3	Cause	Over current to the motor
			Check & Remedy	Same as Case 1.
		Case 4	Cause	Console finisher control PWB trouble
			Check & Remedy	Same as Case 1.

Main code	Sub code	Title	Finisher rear alignment motor trouble (Finisher detection)	
F1	20	Display	Lamp/Message	
		Phenomenon	Detail	Rear alignment motor trouble
			Section	Finisher
		Case 1	Cause	Motor lock
			Check & Remedy	Use SIM 3-3 to check the staple motor operation.
		Case 2	Cause	Motor RPM abnormality
			Check & Remedy	Same as Case 1.
		Case 3	Cause	Over current to the motor
			Check & Remedy	Same as Case 1.
		Case 4	Cause	Console finisher control PWB trouble
			Check & Remedy	Same as Case 1.

Main code	Sub code	Title	Finisher fold sensor trouble	
F1	31	Display	Lamp/Message	
		Phenomenon	Detail	Sensor input value abnormality
			Section	Finisher
		Case 1	Cause	Sensor breakage
			Check & Remedy	Use SIM 3-2 to check the sensor operation.
		Case 2	Cause	Harness disconnection
			Check & Remedy	Same as case 1.
		Case 3	Cause	Console finisher control PWB trouble
			Check & Remedy	Same as Case 1.

Main code	Sub code	Title	Finisher punch unit communication trouble	
F1	32	Display	Lamp/Message	
		Phenomenon	Detail	Communication error between the console finisher and the punch unit
			Section	Finisher
		Case 1	Cause	Improper connection or disconnection of the connector and the harness of the console finisher and the punch unit.
			Check & Remedy	Check the connector and the harness of the communication line.
		Case 2	Cause	Control PWB (PCU) trouble
			Check & Remedy	Replace the PCU PWB.
		Case 3	Cause	Console finisher control PWB trouble
			Check & Remedy	Replace the console finisher control PWB.
		Case 4	Cause	Malfunction by noises
			Check & Remedy	
		Common	Cancel method	Can be canceled by turning OFF/ON the power.

Main code	Sub code	Title	Finisher punch side registration motor trouble	
F1	33	Display	Lamp/Message	
		Phenomenon	Detail	Punch side registration motor operation trouble
			Section	Finisher
		Case 1	Cause	Motor lock
			Check & Remedy	Use SIM 3-3 to check the staple motor operation.
		Case 2	Cause	Motor RPM abnormality
			Check & Remedy	Same as Case 1.
		Case 3	Cause	Over current to the motor
			Check & Remedy	Same as Case 1.
		Case 4	Cause	Console finisher control PWB trouble
			Check & Remedy	Same as Case 1.

Main code	Sub code	Title	Finisher punch motor trouble	
F1	34	Display	Lamp/Message	
		Phenomenon	Detail	Punch motor operation trouble
			Section	Finisher
		Case 1	Cause	Motor lock
			Check & Remedy	Use SIM 3-3 to check the staple motor operation.
		Case 2	Cause	Motor RPM abnormality
			Check & Remedy	Same as Case 1.
		Case 3	Cause	Over current to the motor
			Check & Remedy	Same as Case 1.
		Case 4	Cause	Console finisher control PWB trouble
			Check & Remedy	Same as Case 1.

Main code	Sub code	Title	Finisher punch side registration sensor trouble	
F1	35	Display	Lamp/Message	
		Phenomenon	Detail	Sensor input value abnormality
			Section	Finisher
		Case 1	Cause	Sensor breakage
			Check & Remedy	Use SIM 3-2 to check the sensor operation.
		Case 2	Cause	Harness disconnection
			Check & Remedy	Same as case 1.
		Case 3	Cause	Console finisher control PWB trouble
			Check & Remedy	Same as Case 1.

Main code	Sub code	Title	Finisher punch registration sensor trouble	
F1	36	Display	Lamp/Message	
		Phenomenon	Detail	Sensor input value abnormality
			Section	Finisher
		Case 1	Cause	Sensor breakage
			Check & Remedy	Use SIM 3-2 to check the sensor operation.
		Case 2	Cause	Harness disconnection
			Check & Remedy	Same as case 1.
		Case 3	Cause	Console finisher control PWB trouble
			Check & Remedy	Same as Case 1.

Main code	Sub code	Title	Finisher/sorter backup RAM trouble	
F1	37	Display	Lamp/Message	
		Phenomenon	Detail	• Abnormal transformation of backup RAM contents • Writing to the backup RAM is started but is not completed in 250msec. • When writing to the backup RAM, if the write data do not coincide with the read data, writing is performed again. After writing again, the write data still do not coincide with the read data. • Backup RAM trouble • Sorter control PWB trouble
			Section	Finisher/sorter
		Case 1	Cause	Console finisher control PWB trouble
			Check & Remedy	Replace the console finisher control PWB.
		Case 2	Cause	Malfunction caused by noises
			Check & Remedy	
		Case 3	Cause	Sorter control PWB trouble
			Check & Remedy	Turn OFF/ON the machine power, and check that the trouble is canceled or not. Replace the sorter controller PWB, and execute the bin paper sensor sensitivity adjustment and the guide bar motor oscillation range adjustment. (For the adjustment procedures, refer to pages 5-1 and 5-2 (AR-S11 S/M).)

Main code	Sub code	Title	Finisher punch backup RAM trouble	
F1	38	Display	Lamp/Message	
		Phenomenon	Detail	Abnormal transformation of punch unit backup RAM contents
			Section	Finisher
		Case 1	Cause	Punch control PWB trouble
			Check & Remedy	Replace the punch control PWB.
		Case 2	Cause	Malfunction caused by noises
			Check & Remedy	

Main code	Sub code	Title	Finisher punch dust sensor trouble	
F1	39	Display	Lamp/Message	
		Phenomenon	Detail	Punch dust sensor detection trouble
			Section	Finisher
		Case 1	Cause	Sensor breakage
			Check & Remedy	Use SIM 3-2 to check the sensor operation.
		Case 2	Cause	Harness disconnection
			Check & Remedy	Same as Case 1.
		Case 3	Cause	Console finisher control PWB trouble
			Check & Remedy	Same as Case 1.

Main code	Sub code	Title	Finisher punch power disconnection trouble	
F1	40	Display	Lamp/Message	
		Phenomenon	Detail	The power disconnection of the punch unit is detected.
			Section	Finisher
		Case 1	Cause	Harness disconnection
			Check & Remedy	Use SIM 3-3 to check the punching operation.
		Case 2	Cause	Punch control PWB trouble
			Check & Remedy	Same as Case 1.

Main code	Sub code	Title	Sorter guide bar oscillation motor (M3) lock	
F1	83	Display	Lamp/Message	
		Phenomenon	Detail	• When returning to the home position, the operation is not completed in 2sec. • When moving from the home position, the home position sensor keeps ON after 20-pulse operation. • Guide bar drive motor trouble • Guide bar home position sensor trouble • Guide bar mechanism section trouble • Circuit breaker operates. • Sorter control PWB trouble • Check the guide bar drive motors and sensors with SIM 3-2, 3.
			Section	Sorter
		Case 1	Cause	Guide bar home position sensor (PI3) trouble
			Check & Remedy	Check the guide bar home position sensor. Is it normal? Replace the sensor.

Main code	Sub code	Title	Sorter guide bar oscillation motor (M3) lock	
F1	83	Case 2	Cause	Cable trouble
			Check & Remedy	Check connection of the cable between the guide bar oscillation motor and the sorter controller PWB. Is it proper? Connect properly.
		Case 3	Cause	Circuit breaker trouble
			Check & Remedy	Check that the circuit breaker (CB1) on the sorter controller PWB. Did it operate? Remove the cause that operated the circuit breaker, and push the circuit breaker.
		Case 4	Cause	Guide bar trouble
			Check & Remedy	Check for any mechanical obstruction on the moving path of the guide bar. Is there any obstruction? Repair the mechanism.
		Case 5	Cause	Sorter control PWB trouble
			Check & Remedy	Replace the guide bar oscillation motor (M3) and check that the trouble is canceled or not. Replace the sorter controller PWB, and execute the bin paper sensor sensitivity adjustment and the guide bar motor oscillation range adjustment. (For the adjustment procedures, refer to pages 5-1 and 5-2 (AR-S11 S/M).)

Main code	Sub code	Title	Sorter bin shift motor lock (M1)	
F1	89	Display	Lamp/Message	
		Phenomenon	Detail	• The operation is not completed in the time which is 4 times greater than the specified time after starting the bin shift motor. • When driving the bin shift motor, the signal from the shift motor lock sensor is not detected for 250msec. • When shifting to the home position, the operation is not completed in 30 sec. • Bin shift motor trouble • Lead cam position sensor trouble • Bin shift mechanism trouble • Circuit breaker operation • Sorter control PWB trouble • Check the operation of the bin shift motor and the sensor with SIM 3-3.
			Section	Sorter

Main code	Sub code	Title	Sorter bin shift motor lock (M1)	
F1	89	Case 1	Cause	Cable trouble
			Check & Remedy	Check that the cable between the bin shift motor and the sorter controller PWB is properly connected. Connect properly.
		Case 2	Cause	Circuit breaker trouble
			Check & Remedy	Check that the circuit breaker (CB1) on the sorter controller PWB is operating. Remove the cause of the circuit breaker operation, and press the circuit breaker.
		Case 3	Cause	Bin shift motor (M1) trouble Sorter controller PWB trouble
			Check & Remedy	Check that the voltage between the connector J8-1 and J8-2 on the bin shift motor driver PWB is about 24V at the operating timing of the bin shift motor (M1). Check the wiring to the bin shift motor. If it is normal, replace the bin shift motor. Replace the sorter controller PWB, and perform the bin paper sensor sensitivity adjustment and the guide bar motor oscillation range adjustment. (For the procedures, refer to pages 5-1 to 5-2 (AR-S11 S/M).)

Main code	Sub code	Title	Sorter bin paper sensor automatic adjustment trouble	
F1	91	Display	Lamp/Message	
		Phenomenon	Detail	• The sensor output abnormality in the sensor detection level adjustment • Bin paper sensor trouble • Sorter control PWB trouble • Check the sensor output with SIM 3-2.
			Section	Sorter
		Case 1	Cause	Cable trouble
			Check & Remedy	Check that the cable between the sorter controller PWB and the bin unit is properly connected. Connect properly.
		Case 2	Cause	Cable trouble
			Check & Remedy	Check that the cable between the bin paper sensor light emitting side (S1) and the light receiving side (S2) is properly connected. Connect properly.

Main code	Sub code	Title	Sorter bin paper sensor automatic adjustment trouble	
F1	91	Case 3	Cause	Installation of bin paper sensor light emitting side (S1) and light receiving side (S2) trouble
			Check & Remedy	Check that the bin paper sensor light emitting side (S1) and the light receiving side (S2) are properly installed. Connect properly. When the bin paper sensor light emitting side (S1) and the light receiving side (S2) are installed again, perform the bin paper sensor sensitivity adjustment. (For the procedure, refer to page 5-1 (AR-S11 S/M).)
		Case 4	Cause	Bin paper sensor light emitting side (S1) and light receiving side (S2) trouble Sorter controller PWB trouble
			Check & Remedy	When the bin paper sensor light emitting side (S1) and the light receiving side (S2) are replaced and the bin paper sensor sensitivity adjustment is performed, the trouble is canceled. Replace the bin paper sensor light emitting side (S1) and the light receiving side (S2) and perform the bin paper sensor sensitivity adjustment. (For the procedure, refer to page 5-1 (AR-S11 S/M).) Replace the sorter controller PWB, and perform the bin paper sensor sensitivity adjustment and the guide bar motor oscillation range adjustment. (For the procedures, refer to pages 5-1 to 5-2 (AR-S11 S/M).)

Main code	Sub code	Title	Drum cartridge initial detection trouble (Black)	
F2	15	Display	Lamp/Message	
		Phenomenon	Detail	Drum cartridge initial detection trouble
			Section	Drum cartridge
		Case 1	Cause	Connector harness trouble, connector disconnection
			Check & Remedy	1. Check connection of the drum cartridge initial sensor. → Connect it properly. 2. Check connection of the connector harness and the PCU PWB. → Connect it properly. 3. Check for disconnection of the harness. → Replace the harness.
		Case 2	Cause	Cartridge trouble
			Check & Remedy	Replace the cartridge.

Main code	Sub code	Title	Drum cartridge initial detection trouble (Cyan)	
F2	16	Display	Lamp/Message	
		Phenomenon	Detail	Drum cartridge initial detection trouble
			Section	Drum cartridge
		Case 1	Cause	Connector harness trouble, connector disconnection
			Check & Remedy	1. Check connection of the drum cartridge initial sensor. → Connect it properly. 2. Check connection of the connector harness and the PCU PWB. → Connect it properly. 3. Check for disconnection of the harness. → Replace the harness.
		Case 2	Cause	Cartridge trouble
			Check & Remedy	Replace the cartridge.

Main code	Sub code	Title	Drum cartridge initial detection trouble (Magenta)	
F2	17	Display	Lamp/Message	
		Phenomenon	Detail	Drum cartridge initial detection trouble
			Section	Drum cartridge
		Case 1	Cause	Connector harness trouble, connector disconnection
			Check & Remedy	1. Check connection of the drum cartridge initial sensor. → Connect it properly. 2. Check connection of the connector harness and the PCU PWB. → Connect it properly. 3. Check for disconnection of the harness. → Replace the harness.
		Case 2	Cause	Cartridge trouble
			Check & Remedy	Replace the cartridge.

Main code	Sub code	Title	Drum cartridge initial detection trouble (Yellow)	
F2	18	Display	Lamp/Message	
		Phenomenon	Detail	Drum cartridge initial detection trouble
			Section	Drum cartridge
		Case 1	Cause	Connector harness trouble, connector disconnection
			Check & Remedy	1. Check connection of the drum cartridge initial sensor. → Connect it properly. 2. Check connection of the connector harness and the PCU PWB. → Connect it properly. 3. Check for disconnection of the harness. → Replace the harness.
		Case 2	Cause	Cartridge trouble
			Check & Remedy	Replace the cartridge.

Main code	Sub code	Title	Transfer unit initial detection trouble	
F2	19	Display	Lamp/Message	
		Phenomenon	Detail	Transfer unit initial detection trouble
			Section	Transfer unit
		Case 1	Cause	Connector harness trouble, connector disconnection
			Check & Remedy	Check connection of the transfer unit initial sensor. Check connection of the connector and the harness of the PCU PWB. Check for disconnection of the harness.
		Case 2	Cause	Unit trouble
			Check & Remedy	Replace the unit.

Main code	Sub code	Title	Process thermistor breakdown	
F2	39	Display	Lamp/Message	
		Phenomenon	Detail	Process thermistor open
			Section	Drum cartridge
		Case 1	Cause	Process thermistor trouble
			Check & Remedy	Replace the process thermistor.
		Case 2	Cause	Disconnection of the process thermistor harness.
			Check & Remedy	Check connection of the connector and the harness of the process thermistor.
		Case 3	Cause	PCU PWB trouble
			Check & Remedy	Replace the PCU PWB.

Main code	Sub code	Title	Toner empty sensor abnormality (Black)	
F2	40	Display	Lamp/Message	
		Phenomenon	Detail	Toner empty sensor output abnormality
			Section	Cartridge
		Case 1	Cause	Connector harness trouble, connector disconnection
			Check & Remedy	1. Check connection of the toner empty sensor. → Connect it properly. 2. Check connection of the connector harness to the PCU PWB. → Connect it properly. 3. Check connection of the cartridge. → Connect it properly. 4. Check for disconnection of the harness. → Replace the harness.
		Case 2	Cause	Cartridge trouble
			Check & Remedy	Replace the cartridge.

Main code	Sub code	Title	Toner empty sensor abnormality (Cyan)	
F2	41	Display	Lamp/Message	
		Phenomenon	Detail	Toner empty sensor output abnormality
			Section	Cartridge
		Case 1	Cause	Connector harness trouble, connector disconnection
			Check & Remedy	1. Check connection of the toner empty sensor. → Connect it properly. 2. Check connection of the connector harness to the PCU PWB. → Connect it properly. 3. Check connection of the cartridge. → Connect it properly. 4. Check for disconnection of the harness. → Replace the harness.
		Case 2	Cause	Cartridge trouble
			Check & Remedy	Replace the cartridge.

Main code	Sub code	Title	Toner empty sensor abnormality (Magenta)	
F2	42	Display	Lamp/Message	
		Phenomenon	Detail	Toner empty sensor output abnormality
			Section	Cartridge
		Case 1	Cause	Connector harness trouble, connector disconnection
			Check & Remedy	1. Check connection of the toner empty sensor. → Connect it properly. 2. Check connection of the connector harness to the PCU PWB. → Connect it properly. 3. Check connection of the cartridge. → Connect it properly. 4. Check for disconnection of the harness. → Replace the harness.
		Case 2	Cause	Cartridge trouble
			Check & Remedy	Replace the cartridge.

Main code	Sub code	Title	Toner empty sensor abnormality (Yellow)	
F2	43	Display	Lamp/Message	
		Phenomenon	Detail	Toner empty sensor output abnormality
			Section	Cartridge
		Case 1	Cause	Connector harness trouble, connector disconnection
			Check & Remedy	1. Check connection of the toner empty sensor. → Connect it properly. 2. Check connection of the connector harness to the PCU PWB. → Connect it properly. 3. Check connection of the cartridge. → Connect it properly. 4. Check for disconnection of the harness. → Replace the harness.
		Case 2	Cause	Cartridge trouble
			Check & Remedy	Replace the cartridge.

Main code	Sub code	Title	Black image density sensor trouble (Transfer belt surface reflection ratio abnormality)	
F2	44	Display	Lamp/Message	
		Phenomenon	Detail	Before starting process control, the transfer belt surface is scanned with the image density sensor to adjust the sensor gain so that the output becomes a fixed value. However, when the sensor gain is changed, the output is not within the specified range.
			Section	
		Common	Check	Use SIM 44-2 to adjust the process control sensor gain.
		Case 1	Cause	When "Error" occurs in SIM 44-2: 1. Dirt/defect of the image density sensor 2. Disconnection of the harness between the PCU PWB and the image density sensor 3. Calibration plate solenoid operation trouble
			Check & Remedy	1. Clean/replace the image density sensor. 2. Connect/replace the harness between the PCU PWB and the image density sensor. 3. Replace the calibration plate solenoid.
		Case 2	Cause	When SIM 44-2 is completed: 1. Insufficient cleaning of the transfer belt.
			Check & Remedy	1. Check the transfer belt surface.

Main code	Sub code	Title	Color image density sensor trouble (Calibration plate surface reflection ratio abnormality)	
F2	45	Display	Lamp/Message	
		Phenomenon	Detail	Before starting process control, the calibration plate surface is scanned with the image density sensor to adjust the sensor gain so that the output becomes a fixed value. However, when the sensor gain is changed, the output is not within the specified range.
			Section	—
		Common	Check	Use SIM 44-2 to adjust the process control sensor gain.
		Case 1	Cause	When "Error" occurs in SIM 44-2: 1. Dirt/defect of the image density sensor 2. Disconnection of the harness between the PCU PWB and the image density sensor
			Check & Remedy	1. Clean/replace the image density sensor. 2. Connect/replace the harness between the PCU PWB and the image density sensor.
		Case 2	Cause	When SIM 44-2 is completed: 1. Dirt on the calibration plate, calibration plate solenoid operation trouble
			Check & Remedy	1. Clean the calibration plate. Replace the calibration plate solenoid.

Main code	Sub code	Title	Process humidity sensor breakdown	
F2	58	Display	Lamp/Message	
		Phenomenon	Detail	Process humidity sensor open
			Section	Process
		Case 1	Cause	Process humidity sensor harness disconnection
			Check & Remedy	Check connection of the process humidity sensor harness.
		Case 2	Cause	Process humidity sensor trouble
			Check & Remedy	Replace the process humidity sensor.
		Case 3	Cause	PCU PWB trouble
			Check & Remedy	Replace the PCU PWB.

Main code	Sub code	Title	Developing unit improper cartridge detection (Black)	
F2	70	Display	Lamp/Message	
		Phenomenon	Detail	When detecting the normal CRUM of the cartridge, improper data are detected in the CRUM contents.
			Section	Developing
		Case 1	Cause	Insertion of an improper cartridge. Developing unit trouble
			Check & Remedy	Replace the developing unit.

Main code	Sub code	Title	Developing unit improper cartridge detection (Cyan)	
F2	71	Display	Lamp/Message	
		Phenomenon	Detail	When detecting the normal CRUM of the cartridge, improper data are detected in the CRUM contents.
			Section	Developing
		Case 1	Cause	Insertion of an improper cartridge. Developing unit trouble
			Check & Remedy	Replace the developing unit.

Main code	Sub code	Title	Developing unit improper cartridge detection (Magenta)	
F2	72	Display	Lamp/Message	
		Phenomenon	Detail	When detecting the normal CRUM of the cartridge, improper data are detected in the CRUM contents.
			Section	Developing
		Case 1	Cause	Insertion of an improper cartridge. Developing unit trouble
			Check & Remedy	Replace the developing unit.

Main code	Sub code	Title	Developing unit improper cartridge detection (Yellow)	
F2	73	Display	Lamp/Message	
		Phenomenon	Detail	When detecting the normal CRUM of the cartridge, improper data are detected in the CRUM contents.
			Section	Developing
		Case 1	Cause	Insertion of an improper cartridge. Developing unit trouble
			Check & Remedy	Replace the developing unit.

Main code	Sub code	Title	Developing unit CRUM trouble (Black)	
F2	74	Display	Lamp/Message	
		Phenomenon	Detail	CRUM read/write error
			Section	Developing
		Case 1	Cause	Improper connection or disconnection of the connector and the harness between the PCU and the CRUM.
			Check & Remedy	Check the connector and the harness between the PCU and the CRUM.
		Case 2	Cause	Developing unit trouble
			Check & Remedy	Replace the developing unit.
		Case 3	Cause	Control PWB (PCU) trouble
			Check & Remedy	Replace the PCU PWB.

Main code	Sub code	Title	Developing unit CRUM trouble (Cyan)	
F2	75	Display	Lamp/Message	
		Phenomenon	Detail	CRUM read/write error
			Section	Developing
		Case 1	Cause	Improper connection or disconnection of the connector and the harness between the PCU and the CRUM.
			Check & Remedy	Check the connector and the harness between the PCU and the CRUM.
		Case 2	Cause	Developing unit trouble
			Check & Remedy	Replace the developing unit.
		Case 3	Cause	Control PWB (PCU) trouble
			Check & Remedy	Replace the PCU PWB.

Main code	Sub code	Title	Developing unit CRUM trouble (Magenta)	
F2	76	Display	Lamp/Message	
		Phenomenon	Detail	CRUM read/write error
			Section	Developing
		Case 1	Cause	Improper connection or disconnection of the connector and the harness between the PCU and the CRUM.
			Check & Remedy	Check the connector and the harness between the PCU and the CRUM.
		Case 2	Cause	Developing unit trouble
			Check & Remedy	Replace the developing unit.
		Case 3	Cause	Control PWB (PCU) trouble
			Check & Remedy	Replace the PCU PWB.

Main code	Sub code	Title	Developing unit CRUM trouble (Yellow)	
F2	77	Display	Lamp/Message	
		Phenomenon	Detail	CRUM read/write error
			Section	Developing
		Case 1	Cause	Improper connection or disconnection of the connector and the harness between the PCU and the CRUM.
			Check & Remedy	Check the connector and the harness between the PCU and the CRUM.
		Case 2	Cause	Developing unit trouble
			Check & Remedy	Replace the developing unit.
		Case 3	Cause	Control PWB (PCU) trouble
			Check & Remedy	Replace the PCU PWB.

Main code	Sub code	Title	Trouble of image density sensor for registration (Transfer belt surface reflection ratio abnormality)	
F2	78	Display	Lamp/Message	
		Phenomenon	Detail	Before starting registration, the transfer belt surface is scanned with the image density sensor to adjust the sensor gain so that the output becomes a fixed value. However, when the sensor gain is changed, the value is not within the specified range.
			Section	—
		Case 1	Cause	Image density sensor trouble, disconnection of the harness between the PCU PWB and the image density sensor, dirt on the image density sensor.
			Check & Remedy	Check the sensor and the harness.
		Case 2	Cause	Calibration plate solenoid operation trouble
			Check & Remedy	Check the calibration plate solenoid operation.
		Case 3	Cause	Insufficient cleaning of the transfer belt.
			Check & Remedy	Check the transfer belt surface.

Main code	Sub code	Title	Half-tone process control 1st batch trouble (Black)	
F2	80	Display	Lamp/Message	
		Phenomenon	Detail	First step operation error during half-tone process control
			Section	—
		Common	Check	Use SIM 44-2 to adjust the process control sensor gain.
		Case 1	Cause	When "Error" occurs in the gain adjustment of SIM 44-2: 1. Disconnection of the harness between the PCU PWB and the image density sensor. 2. Image density sensor dirt/trouble
			Check & Remedy	1. Check connection of the harness between the PCU PWB and the image density sensor. 2. Clean/replace the image density sensor.
		Case 2	Cause	When SIM 44-2 gain adjustment is completed: Insufficient cleaning of the transfer belt, calibration plate solenoid operation trouble
			Check & Remedy	Check the drum surface and the belt surface.

Main code	Sub code	Title	Half-tone process control 1st batch trouble (Cyan)	
F2	81	Display	Lamp/Message	
		Phenomenon	Detail	First step operation error during half-tone process control
			Section	—
		Common	Check	Use SIM 44-2 to adjust the process control sensor gain.
		Case 1	Cause	When "Error" occurs in the gain adjustment of SIM 44-2: 1. Disconnection of the harness between the PCU PWB and the image density sensor. 2. Image density sensor dirt/trouble
			Check & Remedy	1. Check connection of the harness between the PCU PWB and the image density sensor. 2. Clean/replace the image density sensor.
		Case 2	Cause	When SIM 44-2 gain adjustment is completed: Insufficient cleaning of the transfer belt, calibration plate solenoid operation trouble
			Check & Remedy	Check the drum surface and the belt surface.

Main code	Sub code	Title	Half-tone process control 1st batch trouble (Magenta)	
F2	82	Display	Lamp/Message	
		Phenomenon	Detail	First step operation error during half-tone process control
			Section	—
		Common	Check	Use SIM 44-2 to adjust the process control sensor gain.
		Case 1	Cause	When "Error" occurs in the gain adjustment of SIM 44-2: 1. Disconnection of the harness between the PCU PWB and the image density sensor. 2. Image density sensor dirt/trouble
			Check & Remedy	1. Check connection of the harness between the PCU PWB and the image density sensor. 2. Clean/replace the image density sensor.
		Case 2	Cause	When SIM 44-2 gain adjustment is completed: Insufficient cleaning of the transfer belt, calibration plate solenoid operation trouble
			Check & Remedy	Check the drum surface and the belt surface.

Main code	Sub code	Title	Half-tone process control 2nd batch trouble (Black)	
F2	84	Display	Lamp/Message	
		Phenomenon	Detail	Second step operation error during half-tone process control
			Section	—
		Common	Check	Use SIM 44-2 to adjust the process control sensor gain.
		Case 1	Cause	When "Error" occurs in the gain adjustment of SIM 44-2: 1. Disconnection of the harness between the PCU PWB and the image density sensor. 2. Image density sensor dirt/trouble
			Check & Remedy	1. Check connection of the harness between the PCU PWB and the image density sensor. 2. Clean/replace the image density sensor.
		Case 2	Cause	When SIM 44-2 gain adjustment is completed: Insufficient cleaning of the transfer belt, calibration plate solenoid operation trouble
			Check & Remedy	Check the drum surface and the belt surface.

Main code	Sub code	Title	Half-tone process control 1st batch trouble (Yellow)	
F2	83	Display	Lamp/Message	
		Phenomenon	Detail	First step operation error during half-tone process control
			Section	—
		Common	Check	Use SIM 44-2 to adjust the process control sensor gain.
		Case 1	Cause	When "Error" occurs in the gain adjustment of SIM 44-2: 1. Disconnection of the harness between the PCU PWB and the image density sensor. 2. Image density sensor dirt/trouble
			Check & Remedy	1. Check connection of the harness between the PCU PWB and the image density sensor. 2. Clean/replace the image density sensor.
		Case 2	Cause	When SIM 44-2 gain adjustment is completed: Insufficient cleaning of the transfer belt, calibration plate solenoid operation trouble
			Check & Remedy	Check the drum surface and the belt surface.

Main code	Sub code	Title	Half-tone process control 2nd batch trouble (Cyan)	
F2	85	Display	Lamp/Message	
		Phenomenon	Detail	Second step operation error during half-tone process control
			Section	—
		Common	Check	Use SIM 44-2 to adjust the process control sensor gain.
		Case 1	Cause	When "Error" occurs in the gain adjustment of SIM 44-2: 1. Disconnection of the harness between the PCU PWB and the image density sensor. 2. Image density sensor dirt/trouble
			Check & Remedy	1. Check connection of the harness between the PCU PWB and the image density sensor. 2. Clean/replace the image density sensor.
		Case 2	Cause	When SIM 44-2 gain adjustment is completed: Insufficient cleaning of the transfer belt, calibration plate solenoid operation trouble
			Check & Remedy	Check the drum surface and the belt surface.

Main code	Sub code	Title	Half-tone process control 2nd batch trouble (Magenta)	
F2	86	Display	Lamp/Message	
		Phenomenon	Detail	Second step operation error during half-tone process control
			Section	—
		Common	Check	Use SIM 44-2 to adjust the process control sensor gain.
		Case 1	Cause	When "Error" occurs in the gain adjustment of SIM 44-2: 1. Disconnection of the harness between the PCU PWB and the image density sensor. 2. Image density sensor dirt/trouble
			Check & Remedy	1. Check connection of the harness between the PCU PWB and the image density sensor. 2. Clean/replace the image density sensor.
		Case 2	Cause	When SIM 44-2 gain adjustment is completed: Insufficient cleaning of the transfer belt, calibration plate solenoid operation trouble
			Check & Remedy	Check the drum surface and the belt surface.

Main code	Sub code	Title	Half-tone process control 2nd batch trouble (Yellow)	
F2	87	Display	Lamp/Message	
		Phenomenon	Detail	Second step operation error during half-tone process control
			Section	—
		Common	Check	Use SIM 44-2 to adjust the process control sensor gain.
		Case 1	Cause	When "Error" occurs in the gain adjustment of SIM 44-2: 1. Disconnection of the harness between the PCU PWB and the image density sensor. 2. Image density sensor dirt/trouble
			Check & Remedy	1. Check connection of the harness between the PCU PWB and the image density sensor. 2. Clean/replace the image density sensor.
		Case 2	Cause	When SIM 44-2 gain adjustment is completed: Insufficient cleaning of the transfer belt, calibration plate solenoid operation trouble
			Check & Remedy	Check the drum surface and the belt surface.

Main code	Sub code	Title	Half-tone process limit error	
F2	90	Display	Lamp/Message	
		Phenomenon	Detail	The difference between the correction value after execution of half-tone process control and the previous correction value exceeds the specified max. value of each color. <The error is recorded in the trouble history, but F2 trouble is not indicated on the display and the previous correction value is remained.>
			Section	—
		Common	Check	Use SIM 44-2 to adjust the process control sensor gain.
		Case 1	Cause	When "Error" occurs in the gain adjustment of SIM 44-2: 1. Disconnection of the harness between the PCU PWB and the image density sensor. 2. Image density sensor dirt/trouble
			Check & Remedy	1. Check connection of the harness between the PCU PWB and the image density sensor. 2. Clean/replace the image density sensor.
		Case 2	Cause	When SIM 44-2 gain adjustment is completed: Insufficient cleaning of the transfer belt, calibration plate solenoid operation trouble
			Check & Remedy	Check the drum surface and the belt surface.

Main code	Sub code	Title	Cassette 1 lift-up trouble	
F3	12	Display	Lamp/Message	
		Phenomenon	Detail	LUD1 does not turn on within the specified time.
			Section	—
		Case 1	Cause	LUD1 sensor trouble, disconnection of harness among the PCU PWB, the lift-up unit, and the paper feed unit.
			Check & Remedy	Check LUD1, its harness, and the connector.
		Case 2	Cause	Cassette 1 lift-up motor trouble
			Check & Remedy	Check the lift-up unit.

Main code	Sub code	Title	ICU-PRT communication trouble (ICU detection)	
F9	00	Display	Lamp/Message	
		Phenomenon	Detail	Communication establishment error, framing, parity, protocol error
			Section	—
		Case 1	Cause	Defective connection of the ICU/PRT PWB communication connector, defective harness between the ICU PWB and the PRT PWB, defective ICU PWB/ PRT PWB
			Check & Remedy	Check connection and the harness between the ICU PWB and the MFP PWB. Check the machine earth. Replace the ICU or the PRT PWB.

Main code	Sub code	Title	PRT DRAM trouble	
F9	01	Display	Lamp/Message	
		Phenomenon	Detail	DRAM in the PRT PWB cannot be accessed.
			Section	—
		Case 1	Cause	Defective DRAM, defective installation of the DRAM
			Check & Remedy	Replace the DRAM. Check connection of the DRAM.

Main code	Sub code	Title	NIC port check error	
F9	03	Display	Lamp/Message	
		Phenomenon	Detail	NIC port check error
			Section	—
		Case 1	Cause	Defective connection of the NIC connector, defective NIC PWB, defective PRT PWB
			Check & Remedy	Check the NIC connector again. Replace the HDD. Replace the PRT PWB.

Main code	Sub code	Title	HDD trouble (PRT controller detection)	
F9	20	Display	Lamp/Message	
		Phenomenon	Detail	The HDD (option) does not operate normally in the machine with the HDD.
			Section	—
		Case 1	Cause	Defective connection of the HDD connector, defective HDD, defective PRT PWB
			Check & Remedy	Check the HDD again. Replace the HDD. Replace the PRT PWB.

Main code	Sub code	Title	Thermistor open (HL1)	
H2	00	Display	Lamp/Message	
		Phenomenon	Detail	Thermistor open
			Section	Fusing
		Case 1	Cause	Disconnection of the fusing section connector
			Check & Remedy	Check the connector and the harness between the thermistor and the control PWB.
		Case 2	Cause	The fusing unit is not installed.
			Check & Remedy	Install the fusing unit.
		Case 3	Cause	Thermistor trouble, control PWB trouble, AC power supply trouble
			Check & Remedy	Replace the thermistor or the control PWB. Check the AC power supply.

Main code	Sub code	Title	Thermistor open (HL2)	
H2	01	Display	Lamp/Message	
		Phenomenon	Detail	Thermistor open
			Section	Fusing
		Case 1	Cause	Disconnection of the fusing section connector
			Check & Remedy	Check the connector and the harness between the thermistor and the control PWB.
		Case 2	Cause	The fusing unit is not installed.
			Check & Remedy	Install the fusing unit.
		Case 3	Cause	Thermistor trouble, control PWB trouble, AC power supply trouble
			Check & Remedy	Replace the thermistor or the control PWB. Check the AC power supply.

Main code	Sub code	Title	Fusing section high temperature trouble (THS1)	
H3	00	Display	Lamp/Message	
		Phenomenon	Detail	The fusing temperature exceeds 230°C.
			Section	Fusing
		Common	Check	Use SIM 5-2 to check the heater lamp flashing operation.
		Case 1	Cause	The heater lamp flashes properly with SIM 5-2. Thermistor trouble, disconnection of the fusing section connector
			Check & Remedy	Check the thermistor and its harness. Cancel the error with SIM 14.
		Case 2	Cause	The heater lamp keeps ON with SIM 5-2. Control PWB trouble, AC power supply trouble
			Check & Remedy	Check the AC PWB and the control PWB lamp control circuit. Cancel the error with SIM 14.

Main code	Sub code	Title	Fusing section high temperature trouble (THS2)	
H3	01	Display	Lamp/Message	
		Phenomenon	Detail	The fusing temperature exceeds 230°C.
			Section	Fusing
		Common	Check	Use SIM 5-2 to check the heater lamp flashing operation.
		Case 1	Cause	The heater lamp flashes properly with SIM 5-2. Thermistor trouble, disconnection of the fusing section connector
			Check & Remedy	Check the thermistor and its harness. Cancel the error with SIM 14.
		Case 2	Cause	The heater lamp keeps ON with SIM 5-2. AC power supply trouble, control PWB trouble
			Check & Remedy	Check the AC PWB and the control PWB lamp control circuit. Cancel the error with SIM 14.

Main code	Sub code	Title	Fusing section low temperature trouble (HL1)	
H4	00	Display	Lamp/Message	
		Phenomenon	Detail	The fusing temperature is not reached within the specified time after turning on the power relay.
			Section	Fusing
		Common	Check	Use SIM 5-2 to check the heater lamp flashing operation.
		Case 1	Cause	The heater lamp flashes properly with SIM 5-2. Thermistor trouble, PCU PWB (thermistor input circuit) trouble
			Check & Remedy	Check the thermistor and its harness. Check the PCU PWB thermistor input circuit. Cancel the error with SIM 14.
		Case 2	Cause	The heater lamp keeps ON with SIM 5-2. Heater lamp trouble, thermostat trouble, interlock switch trouble, AC power supply trouble, PCU PWB (lamp control circuit) trouble
			Check & Remedy	Check for disconnection of the heater lamp and the thermostat. Check the interlock switch. Check the AC PWB and the PUC PWB lamp control circuit. Cancel the error with SIM 14.

Main code	Sub code	Title	Fusing section low temperature trouble (HL2)	
H4	01	Display	Lamp/Message	
		Phenomenon	Detail	The fusing temperature is not reached within the specified time after turning on the power relay.
			Section	Fusing
		Common	Check	Use SIM 5-2 to check the heater lamp flashing operation.
		Case 1	Cause	The heater lamp flashes properly with SIM 5-2. Thermistor trouble, PCU PWB (thermistor input circuit) trouble
			Check & Remedy	Check the thermistor and its harness. Check the PCU PWB thermistor input circuit. Cancel the error with SIM 14.
		Case 2	Cause	The heater lamp keeps ON with SIM 5-2. Heater lamp trouble, thermostat trouble, interlock switch trouble, AC power supply trouble, PCU PWB (lamp control circuit) trouble
			Check & Remedy	Check for disconnection of the heater lamp and the thermostat. Check the interlock switch. Check the AC PWB and the PUC PWB lamp control circuit. Cancel the error with SIM 14.

Main code	Sub code	Title	Five continuous detections of POD1 not-reached jam	
H5	01	Display	Lamp/Message	
		Phenomenon	Detail	POD1 not-reached jams are detected for five times continuously.
			Section	Fusing
		Case 1	Cause	A fusing jam is not canceled completely. (Jam paper remains inside the machine.)
			Check & Remedy	Check remaining jam paper (winding). Cancel the error with SIM 14.
		Case 2	Cause	POD1 sensor trouble, or harness disconnection
			Check & Remedy	Check POD1 sensor harness. Cancel the error with SIM 14.
		Case 3	Cause	Improper installation of the fusing unit
			Check & Remedy	Check installation of the fusing unit. Cancel the error with SIM 14.

Main code	Sub code	Title	Fusing unit initial detection trouble	
H8	01	Display	Lamp/Message	
		Phenomenon	Detail	Fusing unit initial detection trouble
			Section	Fusing
		Case 1	Cause	Disconnection of the connector
			Check & Remedy	Check connection of the fusing unit initial sensor. Check connection of the connector and the harness to the PCU PWB.
		Case 2	Cause	Connector harness trouble
			Check & Remedy	Check for disconnection of the harness.
		Case 3	Cause	Fusing unit trouble
			Check & Remedy	Replace the fusing unit.

Main code	Sub code	Title	Mirror feed trouble	
L1	00	Display	Lamp/Message	
		Phenomenon	Detail	Mirror feed is not completed within the specified time.
			Section	—
		Case 1	Cause	Mirror unit trouble, mirror wire breakage
			Check & Remedy	Use SIM 1-1 to check the mirror operation.

Main code	Sub code	Title	Mirror return trouble	
L3	00	Display	Lamp/Message	
		Phenomenon	Detail	Mirror return is not completed within the specified time.
			Section	—
		Case 1	Cause	Mirror unit trouble, mirror wire breakage
			Check & Remedy	Use SIM 1-1 to check the mirror operation.

Main code	Sub code	Title	Paper feed motor lock trouble	
L4	02	Display	Lamp/Message	
		Phenomenon	Detail	In warm-up, or in canceling a jam, the paper feed motor is rotated, and the lock signal is not detected within 1sec.
			Section	Paper feed
		Case 1	Cause	Paper feed motor trouble, disconnection of the harness between the PCU PWB and the paper feed motor, control circuit trouble
			Check & Remedy	Use SIM 6-1 to check the paper feed motor operation. Check the harness and the connector between the PCU PWB and the paper feed motor.

Main code	Sub code	Title	Transfer belt lift motor trouble	
L4	06	Display	Lamp/Message	
		Phenomenon	Detail	When the belt motor lifts up or down, the change in the belt home position sensor characteristics is not detected within the specified time. (When the motor lifts up, the lower limit sensor remains ON after the specified time.) (When the motor lifts down, the lower limit sensor does not turn on after the specified time.)
			Section	Paper feed
		Case 1	Cause	Belt lift motor trouble, disconnection of the harness between the PCU PWB and the belt lift motor, control circuit trouble
			Check & Remedy	Use SIM 6-1 to check the belt lift motor operation. Check the harness and the connector between the PCU PWB and the belt lift motor.

Main code	Sub code	Title	Transfer belt motor trouble	
L4	07	Display	Lamp/Message	
		Phenomenon	Detail	1) Before driving the drum, the calibration plate is opened with the process control BK sensor, and light is emitted with the gain value of 0 and with the light emitting quantity fixed to 120. The average of ten light quantities repeats to be 5 or less for 3 times continuously. 2) Immediately after driving the drum, the calibration plate is opened with the process control BK sensor, and one whole turn of the belt surface is scanned with the gain value of 0 and with the light emitting quantity at the optimum value (120 ~ 50). The difference between the max. value and the min. value of the scanned data is 5 or less.
			Section	Paper feed

Main code	Sub code	Title	Transfer belt motor trouble	
L4	07	Case 1	Cause	Transfer belt motor connector disconnection, process control sensor connector disconnection, process control BK sensor defect, defective connection of the harness between the PCU PWB and the transfer belt motor, defective control circuit
			Check & Remedy	Check the transfer belt motor operation with SIM25-1. Check the process control sensor operation with SIM44-2. Check the harness and the connector between the PCU PWB and the transfer belt motor.

Main code	Sub code	Title	Shift motor trouble	
L4	11	Display	Lamp/Message	
		Phenomenon	Detail	When initializing the shift motor, the change in the shift motor home position sensor characteristics is not detected within the specified time.
			Section	Paper feed
		Case 1	Cause	Shift motor trouble, disconnection of the harness between the PCU PWB and the shift motor, control circuit trouble
			Check & Remedy	Use SIM 6-1 to check the shift motor operation. Use SIM 30-1 to check the shift motor home position sensor. Check the harness and the connector between the PCU PWB and the shift motor.

Main code	Sub code	Title	Full wave signal not provided	
L8	01	Display	Lamp/Message	
		Phenomenon	Detail	The full wave signal is not provided.
			Section	—
		Case 1	Cause	PCU PWB trouble
			Check & Remedy	Replace the PCU PWB.
		Case 2	Cause	Power supply unit trouble
			Check & Remedy	Replace the power supply unit.
		Case 3	Cause	Harness trouble
			Check & Remedy	Check connection of the harness and the connector.

Main code	Sub code	Title	Full wave signal width abnormality	
L8	02	Display	Lamp/Message	
		Phenomenon	Detail	An abnormality of the full wave signal frequency is detected. (The detected frequency is 65kHz or above, or 45kHz or below.)
			Section	—
		Case 1	Cause	PCU PWB trouble
			Check & Remedy	Replace the PCU PWB.
		Case 2	Cause	Power supply unit trouble
			Check & Remedy	Replace the power supply unit.
		Case 3	Cause	Harness trouble
			Check & Remedy	Check connection of the harness and the connector.

Main code	Sub code	Title	Main power switch abnormality detection	
L8	04	Display	Lamp/Message	
		Phenomenon	Detail	Though the PCU program is operating (the power is supplied), the main power switch OFF is detected.
			Section	—
		Case 1	Cause	Main power switch trouble
			Check & Remedy	Replace the main power switch.
		Case 2	Cause	Power supply unit trouble
			Check & Remedy	Replace the power supply unit.
		Case 3	Cause	Harness trouble
			Check & Remedy	Check connection of the harness and the connector.

Main code	Sub code	Title	RIC copy inhibit signal reception	
PF	00	Display	Lamp/Message	
		Phenomenon	Detail	The copy inhibit signal from RIC (host) is received.
			Section	—
		Case 1	Cause	Depends on a judgment by the host.
			Check & Remedy	Make notification to the host. Use SIM 27-1 to ignore.

Main code	Sub code	Title	ICU-OPE communication trouble (ICU/OPE detection)	
U0	00	Display	Lamp/Message	
		Phenomenon	Detail	Communication establishment error, framing/parity/protocol error
			Section	—
		Case 1	Cause	Disconnection of the operation panel communication connector of the ICU/MFP PWB, harness trouble between the ICU PWB and the MFP PWB.
			Check & Remedy	Check the connector and the harness between the ICU PWB and the MFP PWB.
		Case 2	Cause	ICU/MFP PWB trouble
			Check & Remedy	Check grounding of the machine. Replace the ICU PWB or the MFP PWB.

Main code	Sub code	Title	RTC read trouble	
U1	02	Display	Lamp/Message	
		Phenomenon	Detail	Abnormal value is read from the RTC on the ICU PWB.
			Section	—
		Case 1	Cause	RTC circuit abnormality
			Check & Remedy	Set the time again with the key operation, and check that time advances properly. Check the RTC circuit.

Main code	Sub code	Title	EEPROM read/write error (ICU detection)	
U2	00	Display	Lamp/Message	
		Phenomenon	Detail	EEPROM version error EEPROM write error
			Section	—
		Case 1	Cause	EEPROM trouble. EEPROM is not initialized.
			Check & Remedy	1. Check that the EEPROM is properly set. 2. Use SIM 16 to cancel the error.
		Case 2	Cause	ICU PWB EEPROM access circuit trouble
			Check & Remedy	1. To prevent against deletion of the counter data and the adjustment data, record them with the simulation. (When a printer option is installed, use SIM 22-1 to record the counter data and the adjustment data.) 2. Replace the ICU PWB. 3. Use SIM 16 to cancel the error.

Main code	Sub code	Title	EEPROM check sum error (ICU detection)	
U2	11	Display	Lamp/Message	
		Phenomenon	Detail	EEPROM (ICU) check sum error
			Section	—
		Case 1	Cause	EEPROM trouble
			Check & Remedy	1. Check that the EEPROM is properly set. 2. Use SIM 16 to cancel the error.
		Case 2	Cause	Control circuit freeze by noises. ICU PWB EEPROM access circuit trouble.
			Check & Remedy	1. To prevent against deletion of the counter data and the adjustment data, record them with the simulation. (When a printer option is installed, use SIM 22-1 to record the counter data and the adjustment data.) 2. Replace the ICU PWB. 3. Use SIM 16 to cancel the error.

Main code	Sub code	Title	Production No. data discrepancy	
U2	30	Display	Lamp/Message	
		Phenomenon	Detail	The production No. recorded in the PCU differs from that recorded in the ICU.
			Section	—
		Case 1	Cause	EEPROM is not exchanged when replacing the PCU/ICU PWB.
			Check & Remedy	Check that the EEPROM is properly installed. When replacement, check that the EEPROM before replacement is inserted to the board after replacement.

Main code	Sub code	Title	EEPROM read/write error (SCN)	
U2	80	Display	Lamp/Message	
		Phenomenon	Detail	EEPROM version error EEPROM write error
			Section	—
		Case 1	Cause	EEPROM trouble, Insertion of EEPROM which is not initialized or defective.
			Check & Remedy	1. Check that the EEPROM is properly inserted. 2. Use SIM 16 to cancel the error.
		Case 2	Cause	SCN PWB EEPROM access circuit trouble
			Check & Remedy	1. To prevent against deletion of the counter data and the adjustment data, record them with the simulation. (When a printer option is installed, use SIM 22-1 to record the counter data and the adjustment data.) 2. Replace the SCN PWB. 3. Use SIM 16 to cancel the error.

Main code	Sub code	Title	EEPROM read/write error (PCU)	
U2	90	Display	Lamp/Message	
		Phenomenon	Detail	EEPROM version error EEPROM write error
			Section	—
		Case 1	Cause	EEPROM trouble, Insertion of EEPROM which is not initialized or defective.
			Check & Remedy	1. Check that the EEPROM is properly inserted. 2. Use SIM 16 to cancel the error.
		Case 2	Cause	PCU PWB EEPROM access circuit trouble
			Check & Remedy	1. To prevent against deletion of the counter data and the adjustment data, record them with the simulation. (When a printer option is installed, use SIM 22-1 to record the counter data and the adjustment data.) 2. Replace the PCU PWB. 3. Use SIM 16 to cancel the error.

Main code	Sub code	Title	Adjustment value check sum error (SCN)	
U2	81	Display	Lamp/Message	
		Phenomenon	Detail	EEPROM (SCN) check sum error
			Section	—
		Case 1	Cause	EEPROM trouble
			Check & Remedy	1. Check that the EEPROM is properly inserted. 2. Use SIM 16 to cancel the error.
		Case 2	Cause	SCN PWB EEPROM access circuit trouble
			Check & Remedy	1. To prevent against deletion of the counter data and the adjustment data, record them with the simulation. (When a printer option is installed, use SIM 22-1 to record the counter data and the adjustment data.) 2. Replace the SCN PWB. 3. Use SIM 16 to cancel the error.

Main code	Sub code	Title	Adjustment value check sum error (PCU)	
U2	91	Display	Lamp/Message	
		Phenomenon	Detail	EEPROM (PCU) check sum error
			Section	—
		Case 1	Cause	EEPROM trouble
			Check & Remedy	1. Check that the EEPROM is properly inserted. 2. Use SIM 16 to cancel the error.
		Case 2	Cause	Control circuit freeze caused by noises, PCU PWB EEPROM access circuit trouble
			Check & Remedy	1. To prevent against deletion of the counter data and the adjustment data, record them with the simulation. (When a printer option is installed, use SIM 22-1 to record the counter data and the adjustment data.) 2. Replace the PCU PWB. 3. Use SIM 16 to cancel the error.

Main code	Sub code	Title	ADU alignment plate operation abnormality	
U4	02	Display	Lamp/Message	
		Phenomenon	Detail	The alignment plate does not move from the home position within 1sec when it must move. Return to the home position is not detected for 5sec or more.
			Section	ADU
		Case 1	Cause	Home position sensor trouble
			Check & Remedy	Use SIM 9-2 to detect the home position sensor.
		Case 2	Cause	Alignment plate shift motor trouble
			Check & Remedy	Use SIM 9-4 to check the alignment plate operation.
		Case 3	Cause	Disconnection of the harness between the ADU control PWB and the motor sensor.
			Check & Remedy	Check connection of the harness between the ADU control PWB and the motor sensor.
		Case 4	Cause	Alignment plate operation belt, gear breakage or improper adjustment
			Check & Remedy	Remove the ADU, and check for breakage of the gear and the belt.

Main code	Sub code	Title	ADF communication trouble	
U5	00	Display	Lamp/Message	
		Phenomenon	Detail	Communication test error when turning on the power or after canceling the exclusive simulation. Communication error with the ADF
			Section	ADF
		Case 1	Cause	Improper connection or disconnection of the connector and the harness
			Check & Remedy	Check the connector and the harness in the communication line. Turn OFF/ON the power to cancel the error.
		Case 2	Cause	ADF control PWB trouble, control PWB (MFP) trouble, malfunction caused by noises
			Check & Remedy	Check the ADF control PWB and the control PWB (MFP). Turn OFF/ON the power to cancel the error.

Main code	Sub code	Title	ADF resist sensor trouble	
U5	01	Display	Lamp/Message	
		Phenomenon	Detail	ADF resist sensor detection trouble
			Section	ADF
		Case 1	Cause	Sensor trouble
			Check & Remedy	Use SIM 2-2 to check the resist sensor detection.
		Case 2	Cause	Disconnection of the harness in the ADF.
			Check & Remedy	Check the harness in the ADF.
		Case 3	Cause	ADF control PWB trouble
			Check & Remedy	Replace the ADF control PWB.

Main code	Sub code	Title	ADF repulsion sensor trouble	
U5	02	Display	Lamp/Message	
		Phenomenon	Detail	ADF paper feed/reverse sensor detection trouble
			Section	ADF
		Case 1	Cause	Sensor trouble
			Check & Remedy	Use SIM 2-2 to check the resist sensor detection.
		Case 2	Cause	Disconnection of the harness in the ADF.
			Check & Remedy	Check the harness in the ADF.
		Case 3	Cause	ADF control PWB trouble
			Check & Remedy	Replace the ADF control PWB.

Main code	Sub code	Title	ADF timing sensor trouble	
U5	03	Display	Lamp/Message	
		Phenomenon	Detail	ADF timing sensor detection trouble
			Section	ADF
		Case 1	Cause	Sensor trouble
			Check & Remedy	Use SIM 2-2 to check the resist sensor detection.
		Case 2	Cause	Disconnection of the harness in the ADF.
			Check & Remedy	Check the harness in the ADF.
		Case 3	Cause	ADF control PWB trouble
			Check & Remedy	Replace the ADF control PWB.

Main code	Sub code	Title	Paper feed motor operation abnormality	
U5	11	Display	Lamp/Message	
		Phenomenon	Detail	Paper feed motor operation abnormality
			Section	ADF
		Case 1	Cause	Motor lock, motor RPM abnormality, Over current to the motor, ADF control PWB trouble
			Check & Remedy	Use SIM 2-2/3/4 to check the paper feed motor operation.

Main code	Sub code	Title	Desk communication trouble	
U6	00	Display	Lamp/Message	
		Phenomenon	Detail	Desk communication error, communication test error when turning on the power or after canceling the exclusive simulation.
			Section	Desk
		Case 1	Cause	Improper connection or disconnection of the connector and the harness.
			Check & Remedy	Check the connector and the harness in the communication line. Turn OFF/ON the power to cancel the error.
		Case 2	Cause	Desk control PWB trouble, control PWB (PCU) trouble, malfunction caused by noises
			Check & Remedy	Turn OFF/ON the power to cancel the error.

Main code	Sub code	Title	Desk cassette 1 lift-up trouble	
U6	01	Display	Lamp/Message	
		Phenomenon	Detail	DLUD1 does not turn on within the specified time.
			Section	Desk
		Case 1	Cause	DLUD1 sensor trouble, paper feed unit harness disconnection
			Check & Remedy	Check DLUD1 and the harness and the connector.
		Case 2	Cause	Cassette 1 lift-up motor trouble, desk PWB, lift-up unit trouble
			Check & Remedy	Check the lift-up unit.

Main code	Sub code	Title	Desk cassette 2 lift-up trouble	
U6	02	Display	Lamp/Message	
		Phenomenon	Detail	DLUD2 does not turn on within the specified time.
			Section	Desk
		Case 1	Cause	DLUD2 sensor trouble, paper feed unit harness disconnection
			Check & Remedy	Check DLUD2 and the harness and the connector.
		Case 2	Cause	Cassette 2 lift-up motor trouble, desk PWB, lift-up unit trouble
			Check & Remedy	Check the lift-up unit.

Main code	Sub code	Title	Desk cassette 3 lift-up trouble	
U6	03	Display	Lamp/Message	
		Phenomenon	Detail	DLUD3 does not turn on within the specified time.
			Section	Desk
		Case 1	Cause	DLUD3 sensor trouble, paper feed unit harness disconnection
			Check & Remedy	Check DLUD3 and the harness and the connector.
		Case 2	Cause	Cassette 3 lift-up motor trouble, desk PWB, lift-up unit trouble
			Check & Remedy	Check the lift-up unit.

Main code	Sub code	Title	Desk transport motor trouble	
U6	10	Display	Lamp/Message	
		Phenomenon	Detail	Desk transport motor operation trouble
			Section	—
		Case 1	Cause	Motor lock, motor RPM abnormality, Over current to the motor, console finisher control PWB trouble
			Check & Remedy	Use SIM 3-3 to check the staple motor operation.

Main code	Sub code	Title	RIC communication trouble	
U7	00	Display	Lamp/Message	
		Phenomenon	Detail	RIC communication error, communication test error when turning on the power or after canceling the exclusive simulation.
			Section	—
		Case 1	Cause	Improper connection or disconnection of the connector and the harness
			Check & Remedy	Check the connector and the harness in the communication line. Turn OFF/ON the power to cancel the error.
		Case 2	Cause	RIC control PWB trouble, control PWB (PCU) trouble, malfunction caused by noises
			Check & Remedy	Turn OFF/ON the power to cancel the error.

[12] ROM VERSION UP

1. Outline

A. Target ROM for version up

The following ROM's are used in the machine, and their versions are revised.

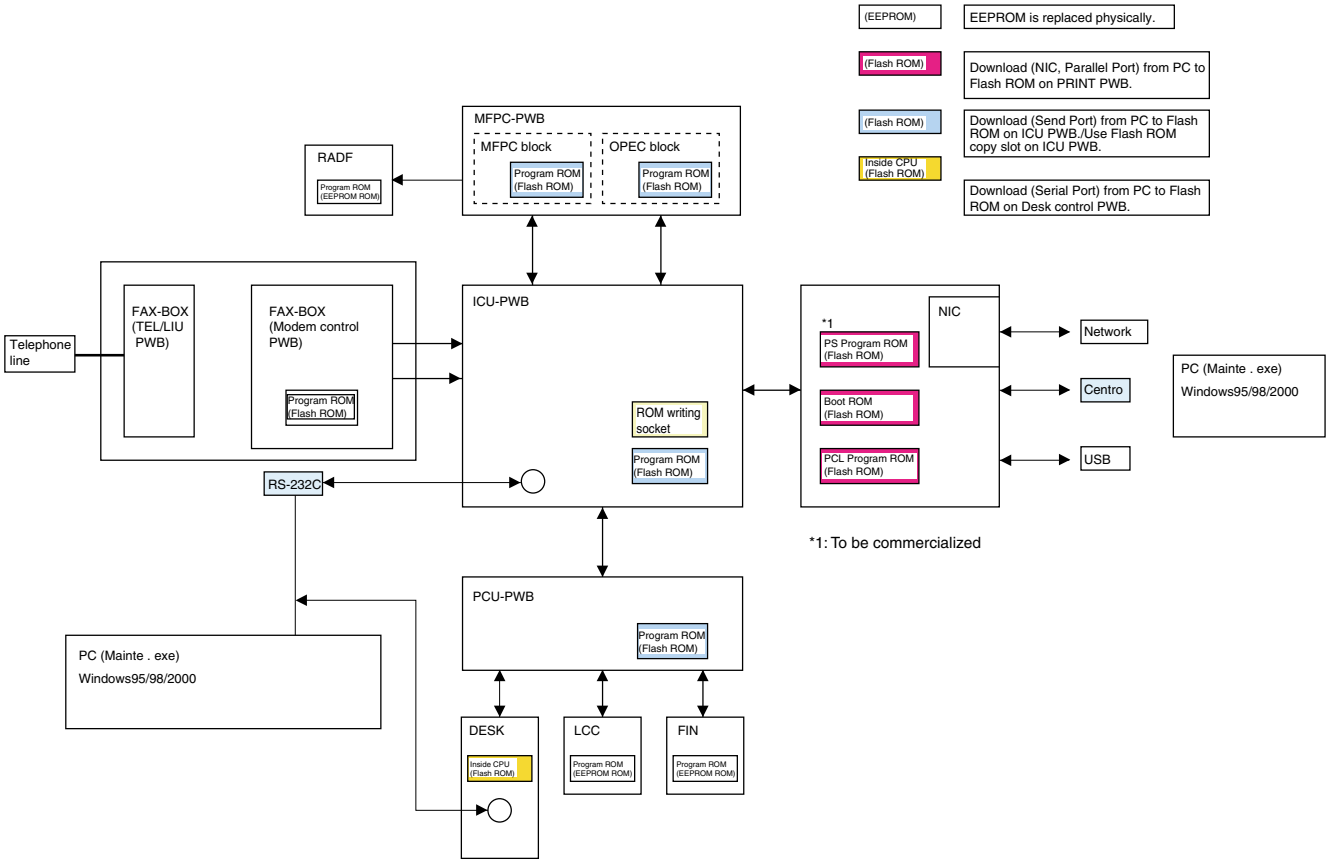

	ROM kind				File name/Content	
Section	Name	Type	Capacity	Replacement	Program (with Copy ROM to ROM program)	Program (without Copy ROM to ROM program)
PCU PWB	PCU ROM	Flash ROM	8Mbit	Replaceable	WPcuXXX_src.pgm	WPcuXXX_d.pgm
ICU PWB	ICU ROM	Flash ROM	32Mbit x 2	Replaceable	WIcuXXX_src.pgm	WIcuXXX_d.pgm
MFP PWB	Operation control ROM	Flash ROM	16Mbit x 2	Replaceable	WOpeXXX_src.pgm	WOpeXXX_d.pgm
	Scanner control ROM	Flash ROM	16Mbit	Replaceable	WScnXXX_src.pgm	WScnXXX_d.pgm
DESK CONTROL PWB	Desk control ROM	Flash ROM included in CPU		Fixed	WDskXXX_src.pgm	WDskXXX_d.pgm
RADF CONTROL PWB	RADF control ROM	EPROM		Replaceable		
LCC CONTROL PWB	LCC control ROM	EPROM		Replaceable		
FAX CONTROL PWB	FAX control ROM	Flash ROM	8Mbit x 2	Replaceable		
FINISHER CONTROL PWB	Finisher control ROM	EPROM		Replaceable		

B. When version up of ROM is required

In the following cases, version up of ROM is required.

1) In order to improve the performance.
2) When installing a new spare part ROM to the machine for repair.
3) When installing a new repair spare parts PWB unit which has a ROM in it to the machine.
4) When the program in a ROM has some troubles and must be corrected.

C. Flash ROM version up method

(In the case of PCU ROM, ICU ROM, Operation control ROM, Scanner control ROM, FAX control ROM)

There are following two methods of Flash Rom version up.

1) By connecting a computer with the ICU PWB, the program data of Flash ROM is written from the computer to the Flash ROM on the ICU MAIN PWB.

   This method has the following two variations.

   a) All data in the PWB programs and the Flash ROM copy (ROM-ROM) program are written: (Making of the source ROM)

      In this method, the Flash ROM on the writing side needs capacity of 32Mbit x 2

      (In order to make a source ROM, the capacity of the Flash ROM must be as shown above.)

   b) Only each PWB program is written.

2) Two Flash ROM sockets on the ICU MAIN PWB are used to copy the program in the source ROM to another Flash ROM. (It normally takes 30 to 60 sec.)

   In this method, the Flash ROM (source ROM) made by the method of using a computer and writing the program to the Flash ROM is required.

(Note)

To make version up of several Flash ROM's of several machines, it is the most effective to make a source ROM by the method of 1) -a) and copy the data to several Flash ROM's by the method of 2).

(1)-a Method of writing the program data from a PC to the ICU MAIN PWB Flash ROM (Making of source ROM)
The program for each PWB and the Flash ROM copy program are copied into the Flash ROM on the Write side socket.

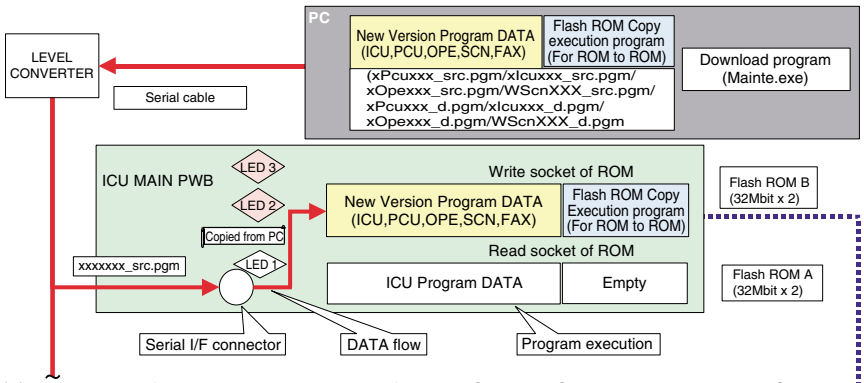

(1)-b Method of writing the program data from a PC to the ICU MAIN PWB Flash ROM
The program for each PWB is copied to the Flash ROM on the Write socket.

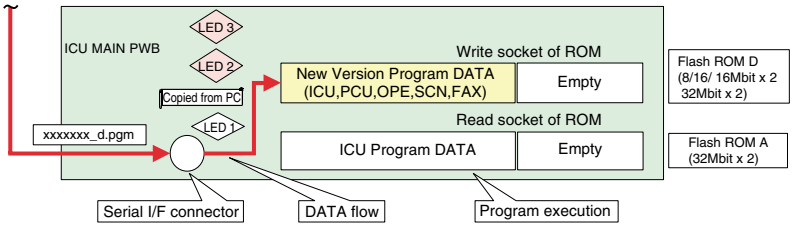

(2) Method of copying with two Flash ROM sockets on the ICU MAIN PWB
The program for each PWB in the Flash ROM (source ROM) on the Read socket is copied to the Flash ROM (target ROM) on the Write socket.

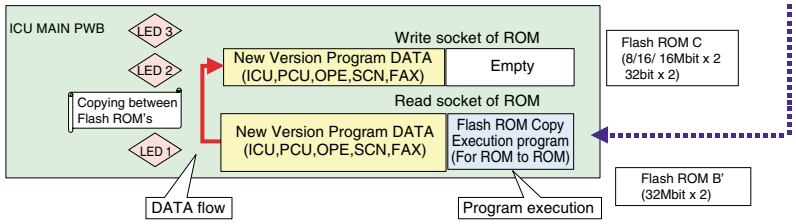

Relationship between copy (write) method and copy contents

(1)-a Method of writing the program data from a PC to the ICU MAIN PWB Flash ROM (Making of source ROM)
The program for each PWB and the Flash ROM copy program are copied into the Flash ROM on the Write side socket.

PC side			Write side Flash Rom (Flash ROM B)				Note
Content		File name	Name	Capacity	Copied content		
Program for PCU Flash ROM	Program for Flash ROM copy (ROM to ROM)	xPcuxxx_src.pgm	For PCU Flash ROM	32bit x 2	Program for PCU Flash ROM	Program for Flash ROM copy (ROM to ROM)	The ICU Flash ROM with the copy (write) program in it must be connected to the Read side Flash ROM socket. When shipping, from the factory, the copy (write) program is provided for use. By this method with two Flash ROM sockets on the ICU PWB, the Flash ROM for copying is made.
Program for ICU Flash ROM	Program for Flash ROM copy (ROM to ROM)	xIcuxxx_src.pgm	For ICU Flash ROM	32bit x 2	Program for ICU Flash ROM	Program for Flash ROM copy (ROM to ROM)	
Program for operation control Flash ROM	Program for Flash ROM copy (ROM to ROM)	xOpexxx_src.pgm	For operation control Flash ROM	32bit x 2	Program for operation control Flash ROM	Program for Flash ROM copy (ROM to ROM)	
Program for scanner control Flash ROM	Program for Flash ROM copy (ROM to ROM)	WScnXXX_src.pgm	For scanner control Flash ROM	32Mbit x 2	Program for scanner control Flash ROM	Program for Flash ROM copy (ROM to ROM)	
Program for FAX control Flash ROM	Program for Flash ROM copy (ROM to ROM)		For FAX control Flash ROM	32Mbit x 2	Program for FAX control Flash ROM	Program for Flash ROM copy (ROM to ROM)	

(1)-b Method of writing the program data from PC to the Flash ROM on the ICU PWB
The program for each PWB is copied to the Flash ROM on the Write socket.

PC side			Write side Flash Rom (Flash ROM D)				Note
Content		File name	Name	Capacity	Copied content		
Program for PCU PWB Flash ROM		xpcuxxx_d.pgm	For PCU Flash ROM	8Mbit	Program for PCU Flash ROM		The ICU MAIN PWB Flash ROM with the copy (write) program in it must be connected to the Read side Flash ROM socket. When shipping, from the factory, the copy (write) program is provided for use.
Program for ICU PWB Flash ROM		xIcuxxx_d.pgm	For ICU Flash ROM	32Mbit x 2	Program for ICU Flash ROM		
Program for operation control Flash ROM		xOpexxx_d.pgm	For operation control Flash ROM	16Mbit x 2	Program for operation control Flash ROM		
Program for scanner control Flash ROM		WScnXXX_d.pgm	For scanner control Flash ROM	16Mbit	Program for scanner control Flash ROM		
Program for FAX control Flash ROM			For FAX control Flash ROM	8Mbit x 2	Program for FAX control Flash ROM		

(2) Method of copying with two Flash ROM sockets on the ICU MAIN PWB
The program for each PWB in the Flash ROM (Source ROM) on the Read side Flash ROM socket is copied to a Flash ROM on the Write side socket.

Read side Flash ROM (ROM B) (*1)			Write side Flash ROM (Flash ROM C)				Note
Capacity	Content		Name	Capacity	Copied content		
32Mbit x 2	Program for PCU Flash ROM	Program for Flash ROM Copy (ROM to ROM)	For PCU Flash ROM	8Mbit	Program for PCU Flash ROM		The Flash ROM on the Read side is the source ROM for PCU, which was made by writing the program data from PC to the Flash ROM.
32Mbit x 2	Program for ICU Flash ROM	Program for Flash ROM copy (ROM to ROM)	For ICU Flash ROM	32Mbit x 2	Program for ICU Flash ROM		The Flash ROM on the Read side is the source ROM for ICU, which was made by writing the program data from PC to the Flash ROM.
32Mbit x 2	Program for operation control Flash ROM	Program for Flash ROM copy (ROM to ROM)	For operation control Flash ROM	16Mbit x 2	Program for operation control Flash ROM		The Flash ROM on the Read side is the source ROM for operation control PWB, which was made by writing the program data from PC to the Flash ROM.
32Mbit x 2	Program for scanner control Flash ROM	Program for Flash ROM copy (ROM to ROM)	Program for scanner control Flash ROM	16Mbit	Program for scanner control Flash ROM		
32Mbit x 2	Program for FAX control Flash ROM		Program for FAX control Flash ROM	8Mbit x 2	Program for FAX control Flash ROM		

*1: This Flash ROM was made by writing the program data from PC to the ICU MAIN PWB Flash ROM.

NOTE: Besides this method of Flash ROM version up, there is another method by use of a machine of the AR-350/450 series. This method, however, allows the version up work in a shorter time. For details, refer to Technical Report ARE-352 (ARJ-390).

(Desk control ROM)

The desk unit control program is installed in the Flash ROM in the CPU of the desk unit control PWB.

Therefore, this Flash ROM cannot be replaced physically.

The PC is connected with the desk unit control PWB, and the Flash Rom program is written from the PC to the Flash Rom in the CPU.

PC side		Write side (Flash ROM in the CPU on the Desk unit control PWB)
Content	File name	Copied content
Program for Desk control PWB Flash ROM	WDskxxx_d.pgm	Program for Desk control PWB Flash ROM

2. Precautions

A. Relationship between each ROM and version up

When making version up of ROM, check the combination with the version of ROM installed to the other PWB including options.

In some combination of ROM versions, the machine may not operate normally.

If all the ROM's are of the latest versions, there is no problem.

3. Necessary items for version up (copy) of Flash ROM

Necessary items for Flash ROM version up

(In the case of PCU ROM, ICU ROM, Operation control ROM, Scanner control ROM, FAX control ROM)

(1)-a Method of writing the program data from a PC to the Flash ROM on the ICU MAIN PWB. (Making of the source ROM)
The program for each PWB and the Flash ROM copy program are copied to a Flash ROM on the Write socket.

Necessary item	Note
Level converter	UKOG-0002QSZZ (with serial cable)/UKOG-0003QSZZ (without serial cable)
PC	Windows 95/98/2000 environment
Download program file	Software to write the program data from a PC to the Flash ROM (Mainte_xxxx.exe)
(PCU MAIN PWB Flash ROM program/Flash ROM copy (ROM to ROM) program) file	xPcuxxx_src.pgm
(ICU MAIN PWB Flash ROM program/Flash ROM copy (ROM to ROM) program) file	xIcuxxx_src.pgm
(Operation control PWB Flash ROM program/Flash ROM copy (ROM to ROM) program) file	xOpexxx_src.pgm
Program for scanner control Flash ROM/Program for Flash ROM copy (ROM to ROM)	WScnXXX_src.pgm
Program for FAX control Flash ROM/Program for Flash Rom copy (ROM to ROM)	
ICU MAIN PWB Flash ROM (including the program for MAIN ICU PWB and the Flash ROM copy (PC - ROM) program) (32Mbit x 2) (Flash ROM A)	Flash ROM which has the function of writing the program data from PC to the Flash ROM on the ICU
Writing Flash ROM (32Mbit x 2) (Flash ROM B)	Flash ROM to make a source ROM

(1)-b Method of writing the program data from a PC to the ICU MAIN PWB Flash ROM.
The program for each PWB is copied to the Flash ROM on the Write side socket.

Necessary item	Note
Level converter	UKOG-0002QSZZ (with serial cable)/UKOG-0003QSZZ (without serial cable)
PC	Windows 95/98/2000 environment
Download program file	Software for writing the program data from a PC to the Flash ROM (Mainte.exe)
PCU Flash ROM program file	xpcuxxx_d.pgm
ICU Flash ROM program file	xIcuxxx_d.pgm
Operation control PWB Flash ROM program file	xOpexxx_d.pgm
Scanner control Flash ROM program	WScnXXX_d.pgm
FAX control Flash ROM program	
Flash Rom for ICU (including the program for Main ICU PWB and the Flash ROM copy (PC - ROM) program (32Mbit x 2) (Flash ROM A)	Flash ROM (ICU PWB) having the function to write program data from PC to the Flash ROM on the ICU PWB.
Writing Flash ROM (16Mbit x 2/ 16Mbit/8Mbit/32Mbit x 2/8Mbit x 2)	The type (capacity) of the Flash ROM depends on which Flash ROM is made among the CPU PWB, the ICU PWB, and the operation PWB.

(2) Method of copying with two Flash ROM sockets on the ICU MAIN PWB
The program for each PWB in the Flash ROM (source ROM) on the Read side Flash ROM socket is copied to the Flash ROM on the Write side socket.

Necessary item	Note
Flash Rom including the ICU program and the Flash ROM copy (ROM to ROM) program (Flash ROM B) (32Mbit x 2)	Flash ROM made by writing the program data from PC to the Flash ROM (32Mbit x 2)
Flash Rom including the PCU program and the Flash ROM copy (ROM to ROM) program (Flash ROM B) (32Mbit x 2)	Flash ROM made by writing the program data from PC to the Flash ROM (32Mbit x 2)
Flash Rom including the program for the operation control PWB and the Flash ROM copy (ROM to ROM) program (Flash ROM B') (32Mbit x 2)	Flash ROM made by writing the program data from PC to the Flash ROM (32Mbit x 2)
Program for scanner control Flash ROM/Flash ROM copy (ROM to ROM) program	Flash ROM made by writing the program data from PC to the Flash ROM (32Mbit x 2)
Program for FAX control Flash ROM/Flash ROM copy (ROM to ROM) program	Flash ROM made by writing the program data from PC to the Flash ROM (32Mbit x 2)
Writing Flash ROM/16Mbit x 2/ 16Mbit/8iMbit/32Mbit x 2) (Flash ROM C)	The type (capacity) of Flash ROM is determined depending on the kind of Flash ROM (in the PCU PWB, in the ICU PWB, or in the operation control PWB).

(In the case of Desk control ROM)

Necessary item	Note
Level converter	UKOG-0002QSZZ (with serial cable)/ UKOG-0003QSZZ (without serial cable)
PC	Windows 95/98/2000 environment
Download program file	Software to write the program data from PC to the Flash ROM. (Mainte_xxxx.exe)
Desk control Flash ROM program file	WDskxxx_d.pgm

4. Flash ROM version up procedure

(In the case of PCU ROM, ICU ROM, Operation control ROM, Scanner control ROM, FAX control ROM)

(Preliminary procedure)

1) Remove the machine paper tray cabinet. (2 screws)

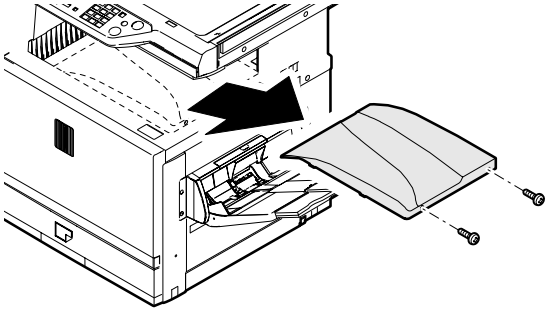

2) Remove the shield plate. (2 screws)

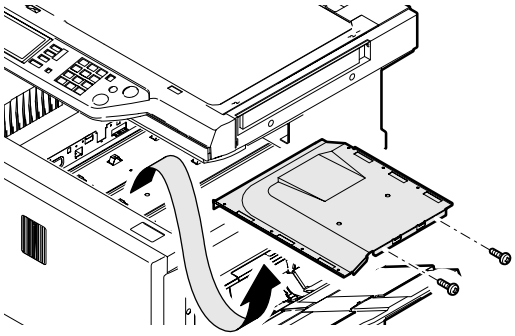

A. By using a computer and the ICU PWB, the program data of Flash ROM is written from the computer to the Flash ROM of the ICU PWB.

1) Check that the power of the machine is turned off. Install the Flash ROM which is to be upgraded (copied) to the write socket of the ICU PWB.

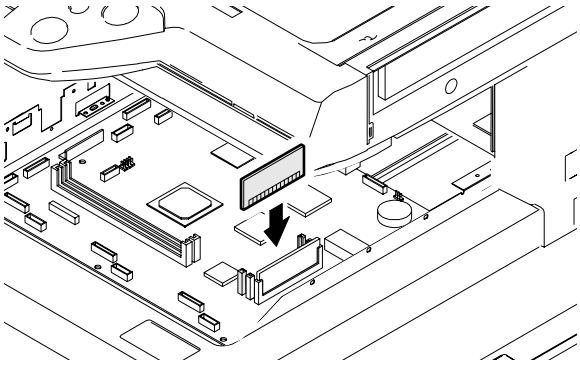

2) Connect the computer with the level converter.

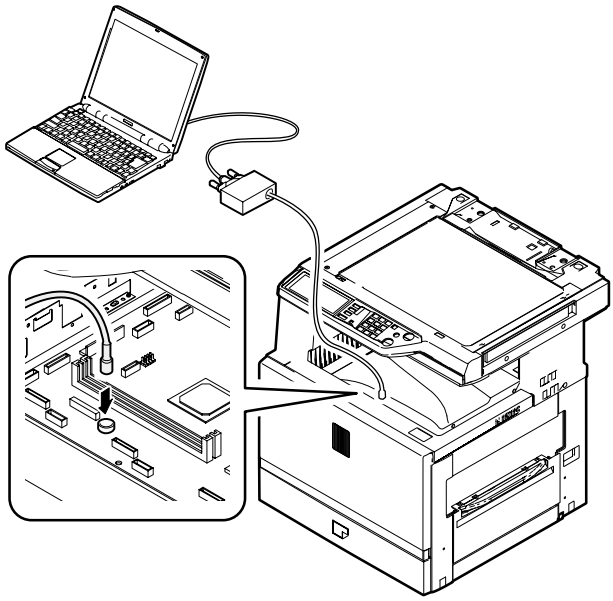

3) Connect the serial I/F connector on the ICU MAIN PWB with the level converter.
4) Turn on the computer to start Windows.
5) Turn on the machine.
6) Set the communication speed on the computer side.

In the case of Windows 95/98:

(6-1) Open the "Control panel."

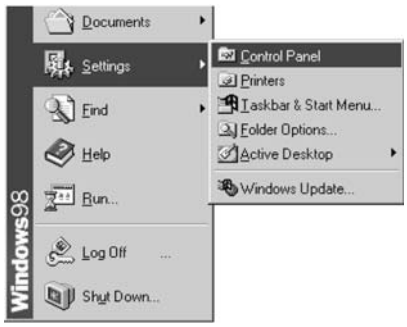

(6-2) Open the "System."

(6-3) Click the "Device manager." Click the "Port (COM/LPT)" and double-click the "Communication port (COM*)" to be used.

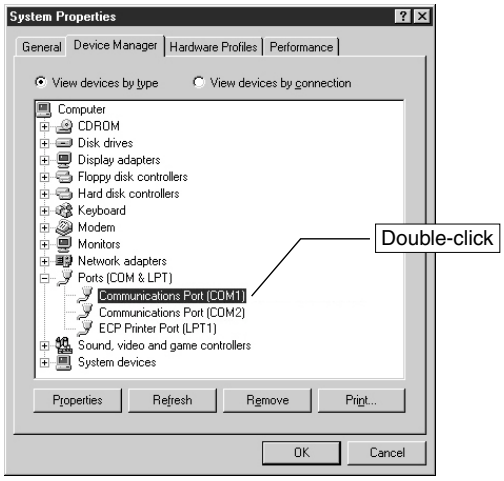

(6-4) Open the "Port setup" tab, and enter "115200" in the column of bit/sec.
If the above communication speed cannot be set, select and set one of the following speeds.
9600/19200/38600/57600

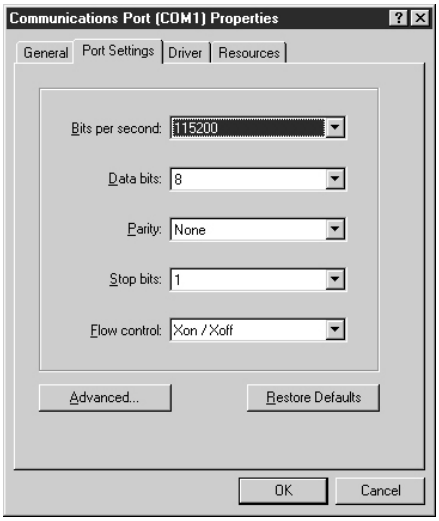

In the case of Windows 2000:

(6-1) Open the "Control panel."

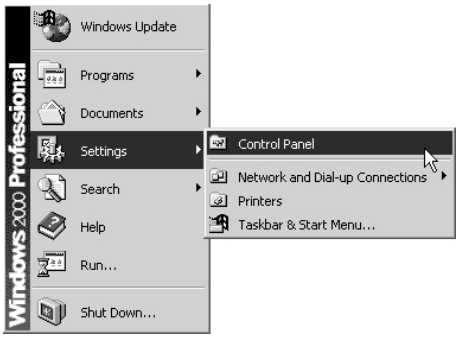

(6-2) Open the "System."

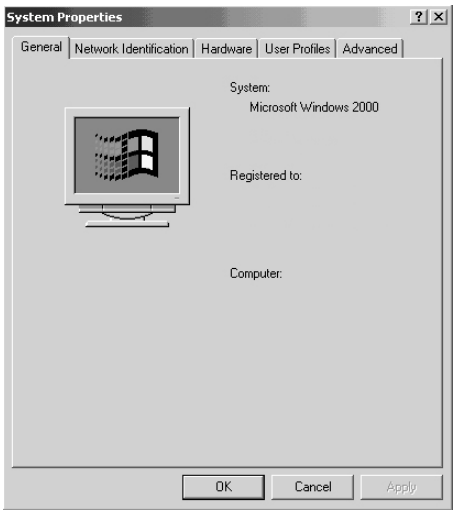

(6-3) Select the "Device manager (D)" on the hardware menu.

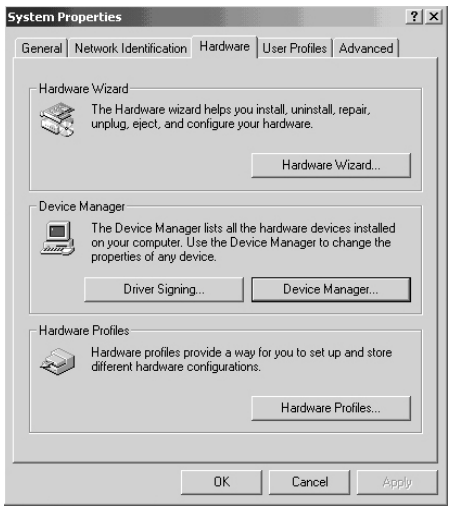

(6-4) Click the "Port (COM/LPT)" and douche-click the "Communication port (COM*)" to be used.

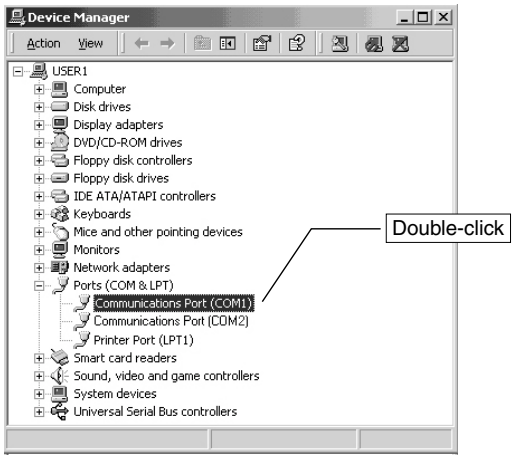

(6-5) Open the "Port setup" tab, and enter "115200" in the column of bit/sec.
If the above communication speed cannot be set, select and set one of the following speeds.
9600/19200/38600/57600

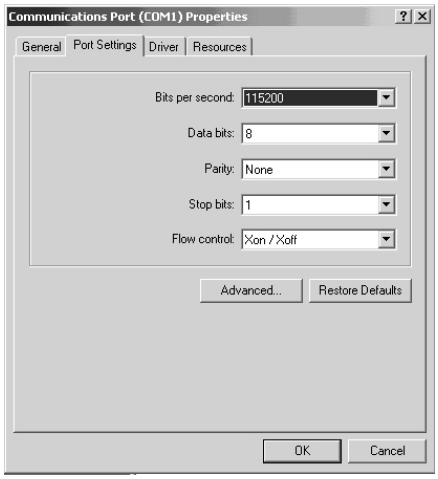

7) Set the communication speed on the machine side. The set value of communication speed on the computer side must be the same as that on the machine side.
(7-1) Enter the simulation 49-2 mode.

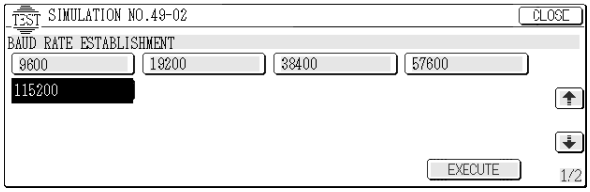

(7-2) Press the key of the same communication speed as what is set in procedure 8). (The set communication speed is highlighted.)
(7-3) Cancel the simulation 49-2.

8) Enter the simulation mode 49-1 mode, and press the ENTER key. (The machine enters the download (Flash ROM writing) mode.)

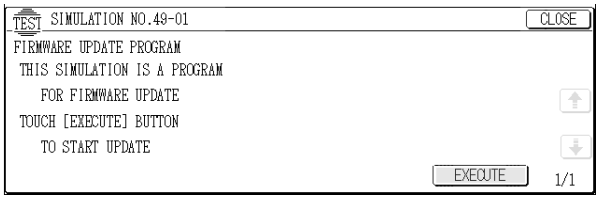

9) Start the download program on the computer side. (Double-click the Mainte.exe file.)

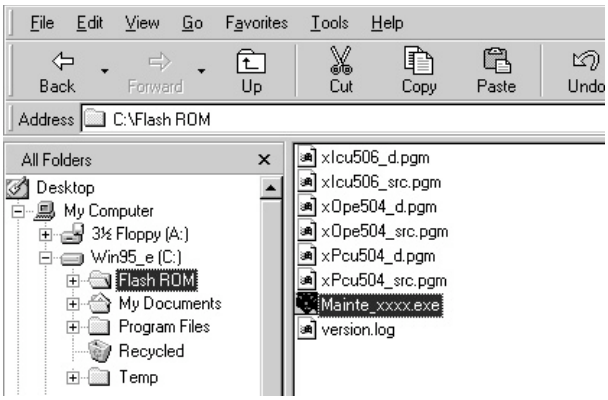

10) Select the communication speed on the option menu. (Set the communication speed same as what is set in procedures 6) and 7).)

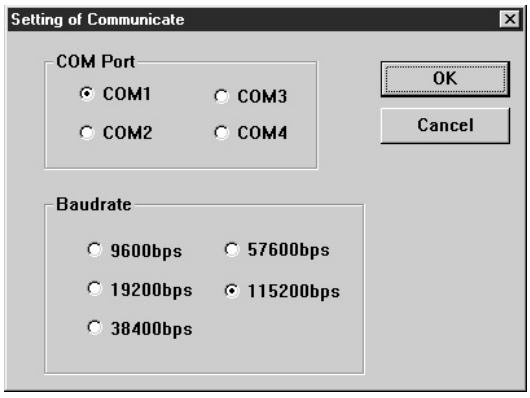

11) Select the data file to be copied (written) to the Flash ROM installed to the Write socket on the ICU MAIN PWB in procedure 1).
(11-1) Double-click the "Simulation Command List " holder.

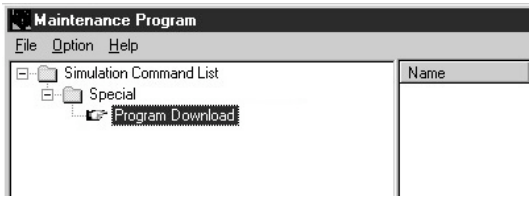

(11-2) Double-click the "Special" holder.
(11-3) Double-click the "Program Download" file.
(11-4) The message of "Program Download OK ?" is displayed. Press the OK button.
(11-5) Select the data (PWB name) to be written and click the START button.

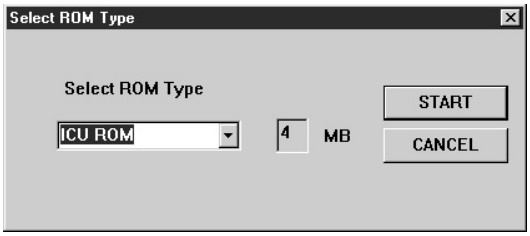

(11-6) Select the data file to be written, and click the "Open" button.

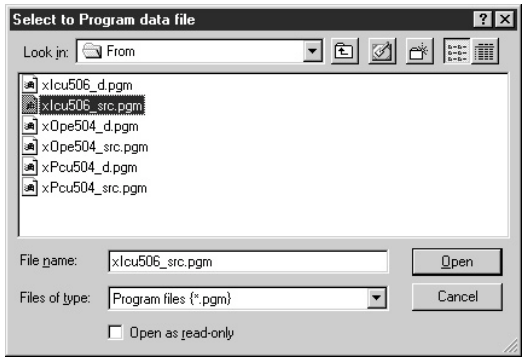

With the above procedure, downloading (writing to the Flash ROM) is started.

(NOTE) Selection of data files to be written determines whether a source ROM (which includes the latest version program and the Flash ROM copy program) or a ROM which has only the latest version program is made.

12) Confirm that downloading (copying to the Flash ROM) is completed on the computer display and on the LCD display. It normally takes 5 to 7 minutes to copy (write) to the Flash ROM.

When downloading is normally completed, the following indications are shown.

* LED3 on the ICU PWB are turned off, and LED1 and LED2 flash at a low speed.
* "FIRMWARE UPGRADE FINISHED" is displayed on the LCD.

13) Cancel the simulation 49-1, and turn off the power of the machine.

(Note) If the Flash ROM is removed from or installed to the machine with the machine power ON, the Flash ROM may be destroyed. Be sure to turn off the power of the machine before removing or installing the Flash ROM.

14) Remove the Flash ROM (which was upgraded) installed to the ICU MAIN PWB Write socket in procedure 1).

When another Flash ROM is to be upgraded, install it to the ICU PWB Write socket and turn on the power, and perform procedures 11) through 14).

B. Method using two Flash ROM sockets on the ICU MAIN PWB to copy between Flash ROM's

1) Check that the power of the machine is OFF. Install the Flash ROM (of either of ICU PWB, PCU PWB, or operation control PWB) to the ICU PWB Write socket.

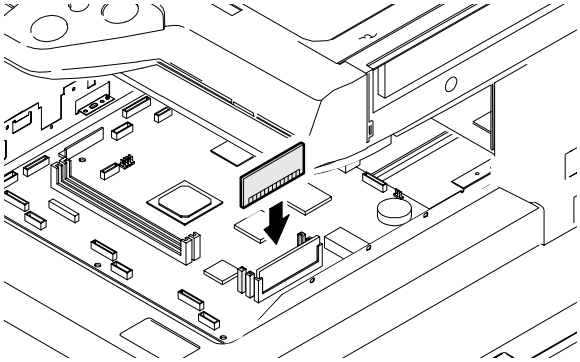

2) Install the source Flash ROM (which has the program data of either of ICU PWB, PCU PWB, or operation control PWB) to the ICU PWB Read socket.
3) Turn on the power of the machine. Copying is started. When copying is completed, LED3 on the ICU PWB are turned off, and LED1 and LED2 flash at a low speed. It normally takes 30 to 60 sec to copy (write) to the Flash ROM.
4) Turn off the power of the machine, and remove the Flash ROM's from the Read and the Write sockets.

(After work)

1) Installed the copied Flash ROM to the specified PWB.
2) Turn on the power of the machine and check that the machine operates normally.
3) Use the simulation 22-5 to check each ROM version.
4) Install the shield plate and the stopper shift. (3 screws)
5) Attach the right upper cabinet of the machine. (2 screws)

(NOTE)

The monitor displays before and after and during the Flash ROM version up (copy) operation are shown below. If the Flash ROM version up operation is not completed normally or if the Flash ROM is not installed to the socket properly, a trouble code is displayed. In that case, perform the countermeasures shown in the table below.

(1) ICU MAIN PWB monitor LED lighting specification

The monitor LED status during copy (write) operation of PC to Flash ROM and Flash ROM to Flash ROM is shown below. In the copy mode of Flash ROM to Flash ROM, the machine status is indicated only with the monitor LED.

While in the copy mode of PC to Flash ROM, the status is indicated on the operation panel or the PC monitor.

Status LED lighting specifications

	LED1	LED2	LED3	Mode
Status 1	Low-speed flashing	Low-speed flashing	OFF	Normal operation
Status 2	High-speed flashing	High-speed flashing	High-speed flashing	System down
Display when writing the program data from PC to Flash ROM				
Status 3	ON	OFF	OFF	Download SIM start
Status 4	OFF	Flashing	OFF	Download ROM not-installed error
Status 5	Flashing	ON	OFF	During data transfer from PC
Status 6	Flashing	Flashing	OFF	Data transfer error from PC
Status 7	ON	ON	OFF	Flash deleting
Status 8	OFF	Flashing	OFF	Flash deleting error
Status 9	Flashing	ON	OFF	Flash writing
Status 10	Flashing	Flashing	OFF	Flash writing error
Status 11	ON	ON	OFF	Verifying
Status 12	ON	Flashing	OFF	Verifying error
Status 13	Low-speed flashing	Low-speed flashing	OFF	Normal completion

	LED1	LED2	LED3	Mode
Display when copying data from Flash ROM to Flash ROM				
Status 14	ON	ON	OFF	ROM copy start
Status 15	OFF	Flashing	OFF	Download ROM not-installed error
Status 16	ON	ON	OFF	ROM capacity checking
Status 17	ON	Flashing	OFF	ROM capacity check error
Status 18	ON	ON	OFF	Flash deleting
Status 19	OFF	Flashing	OFF	Flash deleting error
Status 20	Flashing	ON	OFF	Flash writing
Status 21	Flashing	Flashing	OFF	Flash writing error
Status 22	ON	ON	OFF	Verifying
Status 23	ON	Flashing	OFF	Verifying error
Status 24	Low-speed flashing	Low-speed flashing	OFF	Normal completion

Status in bold means an error

(2) Operation panel display specifications (SIM 49-1)
The operation panel display status in PC to Flash ROM copying (writing) is shown in the table below.

Display message	Operation/Content	Countermeasures
NOW EXECUTING ...	Simulation start	
THIS COPIER IS NOT CONNECTED TO PC.	The cable is not connected.	Turn off the power of the copier machine, and check the connection again.
FLASH ROM ISN'T INSERTED INTO A CONNCTOR.	The writing Flash ROM is not inserted into the socket.	Turn off the copier machine, insert the Flash ROM.
WAITING FOR DATA	Waiting for starting the Flash ROM writing software on PC side	Boot the software for writing to Flash ROM on PC.
ERASING FLASH ...	Deleting	
WRITING FLASH ...	Writing	
VERIFYING FLASH ...	Verifying	
FLASH ERASE ERROR.	Failure in erase of Flash ROM for writing	Try again, or replace the Flash ROM.
FLASH WRITE ERROR.	Failure in copy (write) of Flash ROM for writing	Try again, or replace the Flash ROM.
FLASH VERIFY ERROR.	Failure in verifying Flash ROM content for writing	Try again, or replace the Flash ROM.
DOWNLOADING NOW ...	Data downloading	
DOWNLOAD ERROR.	Data transfer failure	Tray data transfer again, or tray simulation again.
FIRMWARE UPGRADE FINISHED.	Data transfer complete	
THIS SIMULATION DOES NOT WORK IN THIS ROM VERSION.	Displayed when ICU Flash ROM does not support this simulation.	ICU Flash ROM Version up

When the power of PC is down during data transfer, data transfer is performed from the beginning.

(In the case of Desk control PWB)

1) Remove the desk unit power source cover. (One screw)

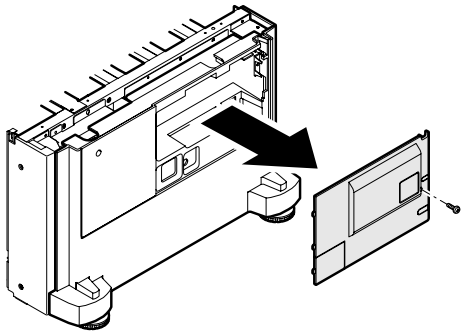

2) Check that the machine power is off, and connect the PC and the level converter desk unit serial I/F connector and the level converter.

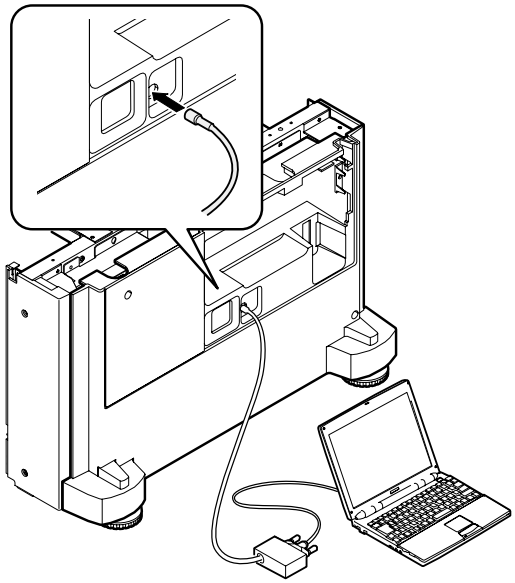

3) Turn on the PC, and start Windows.

4) Set the data transfer speed of PC.

In the case of Windows 95/98:

(4-1) Open the "Control panel."

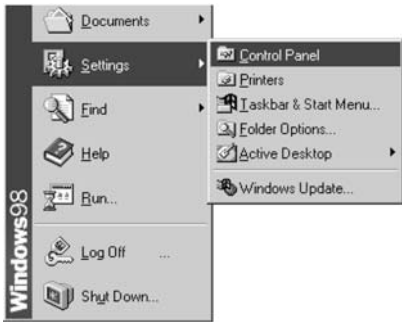

(4-2) Open the "System."

(4-3) Click the "Device manager" and click the "Port (COM/LPT)," and double-click the "Communication port (COM*) to be used.

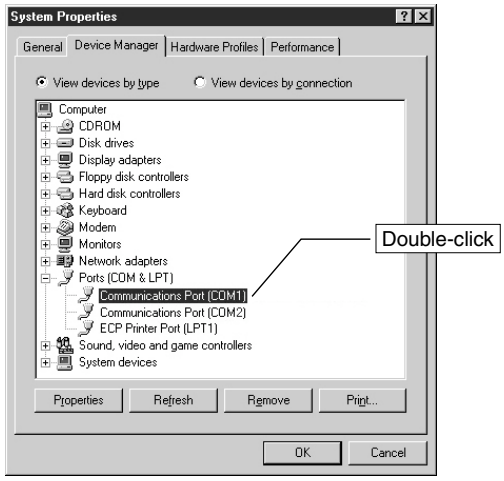

(4-4) Set the bit/sec of port set menu to 38400.
If 38400 cannot be set, set either of the following communication speeds.
9600/19200

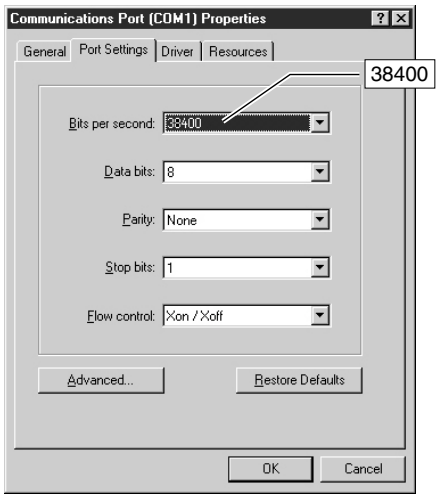

In the case of Windows 2000:

(4-1) Open the "Control panel."

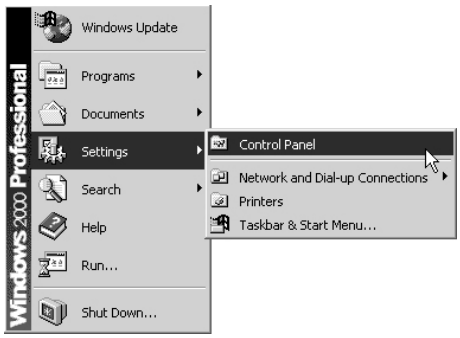

(4-2) Open the "System."

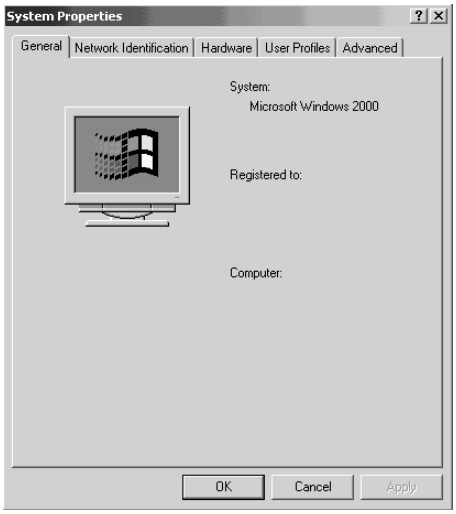

(4-3) Open the "Device manager" on the hardware menu.

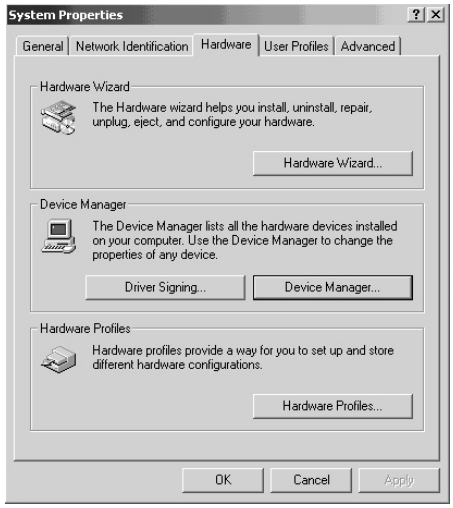

(4-4) Click the "Port (COM/LPT)", and double-click the "Communication port (COM*)" to be used.

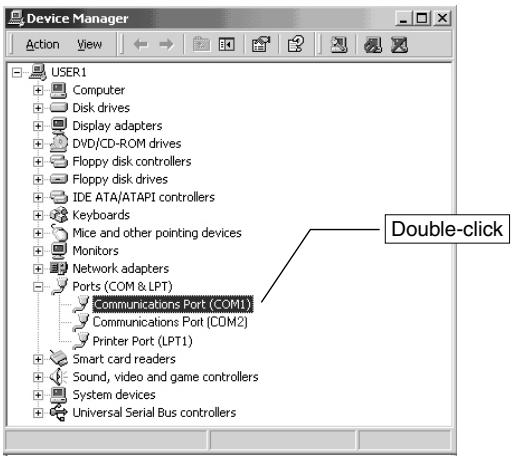

(4-5) Set the bit/sec of the port set menu to 38400, and click the OK button to close the communication port (COM*) property.
If 38400 cannot be set, set either of the following communication speeds.
9600/19200

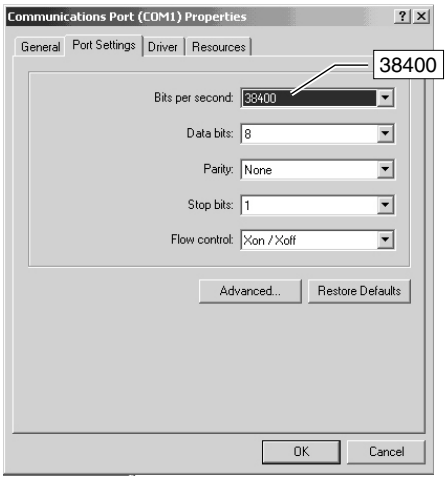

5) Turn on the power of the machine.
6) Enter the simulation 49-10 mode. (Press the EXECUTE key to enter the download (Flash ROM writing) mode.)

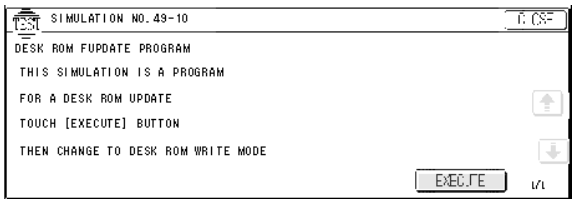

7) Start the download program on the PC side by double-clicking the Mainte.exe file. The following window is indicated.

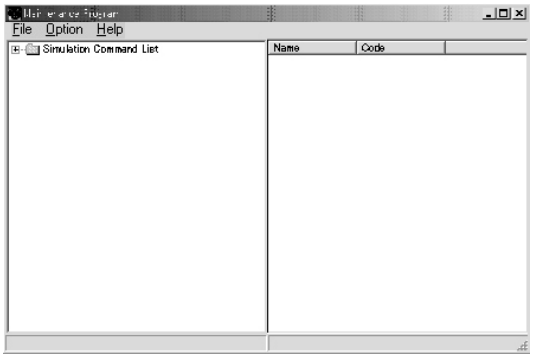

8) Select the communication setup in the option menu, and set the communication speed same as which is set in procedure 4).

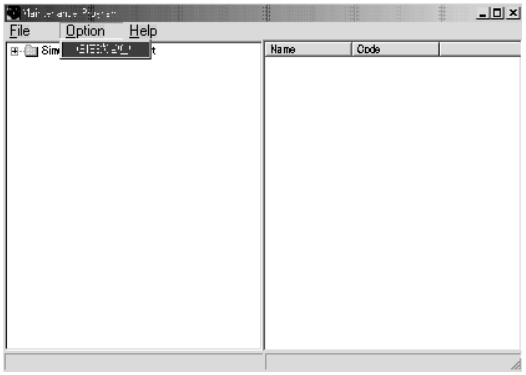

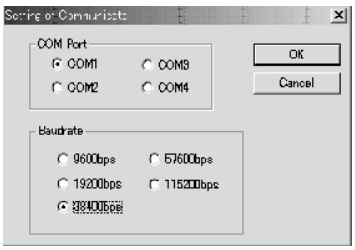

9) Select the data file to be written.
(9-1) Double-click the Simulation Command List folder.
(9-2) Double-click the Special (Whale Desk) folder.

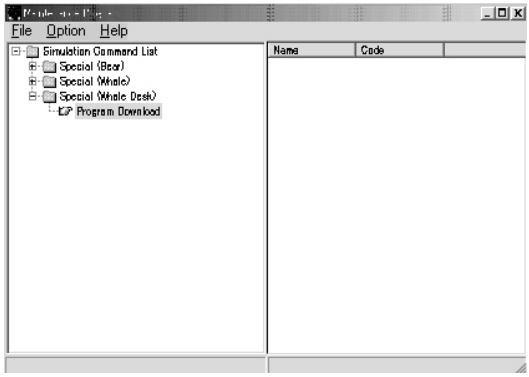

(9-3) Double-click the file Program Download, and the following dialog is displayed. Click the OK button.

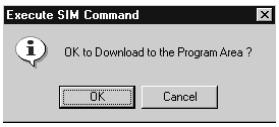

(9-4) Then the following dialog is displayed. Click the START button.

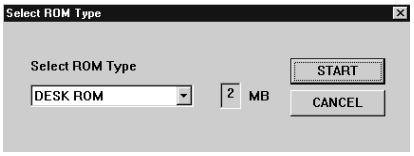

(9-5) The file selection dialog is displayed. Select the data file to be written, and click the Open button.

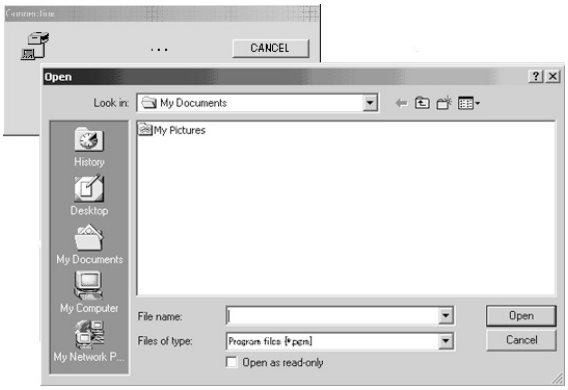

10) With the above procedures, writing is started and the following display is shown.

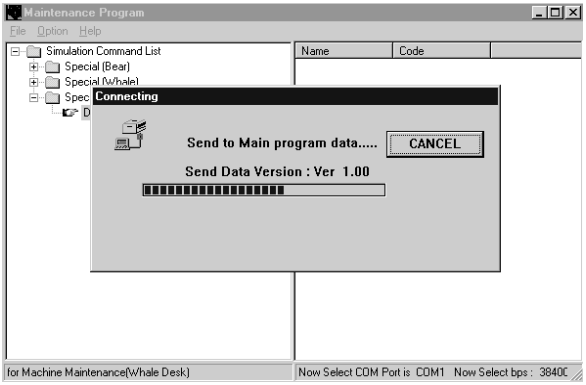

11) Check on the PC display that writing is completed. (When writing is normally completed, the following dialog is displayed.)

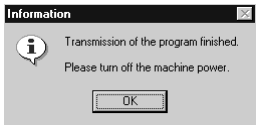

12) Turn off the machine power, and disconnect the level converter.

(NOTE) When connecting or disconnecting the level converter, be sure to turn off the machine power in advance. If the level converter is connected or disconnected with the power ON, the level converter may be damaged.

[13] ELECTRIC DIAGRAM

1. Block diagram

A. PCU PWB

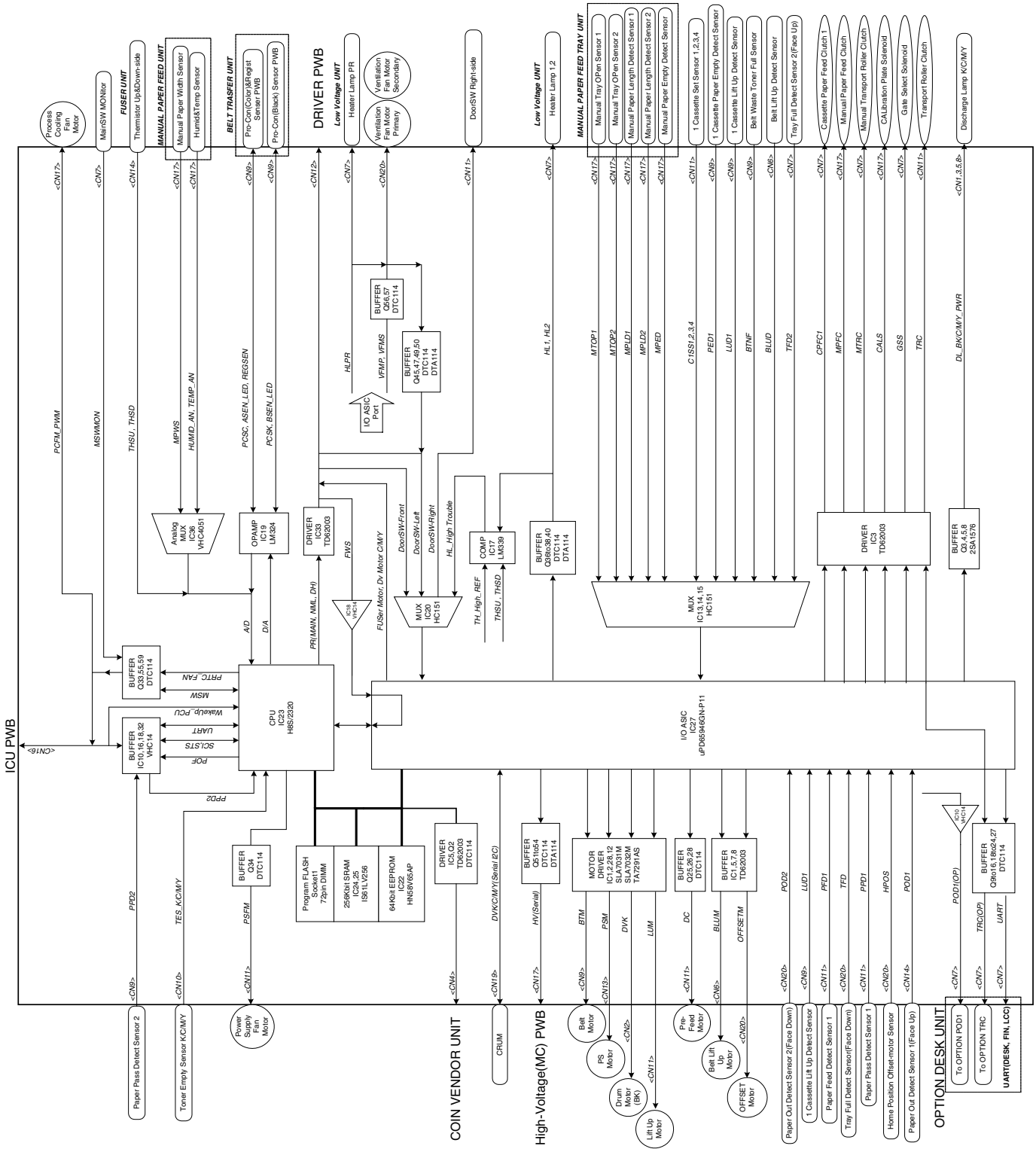

B. ICU PWB

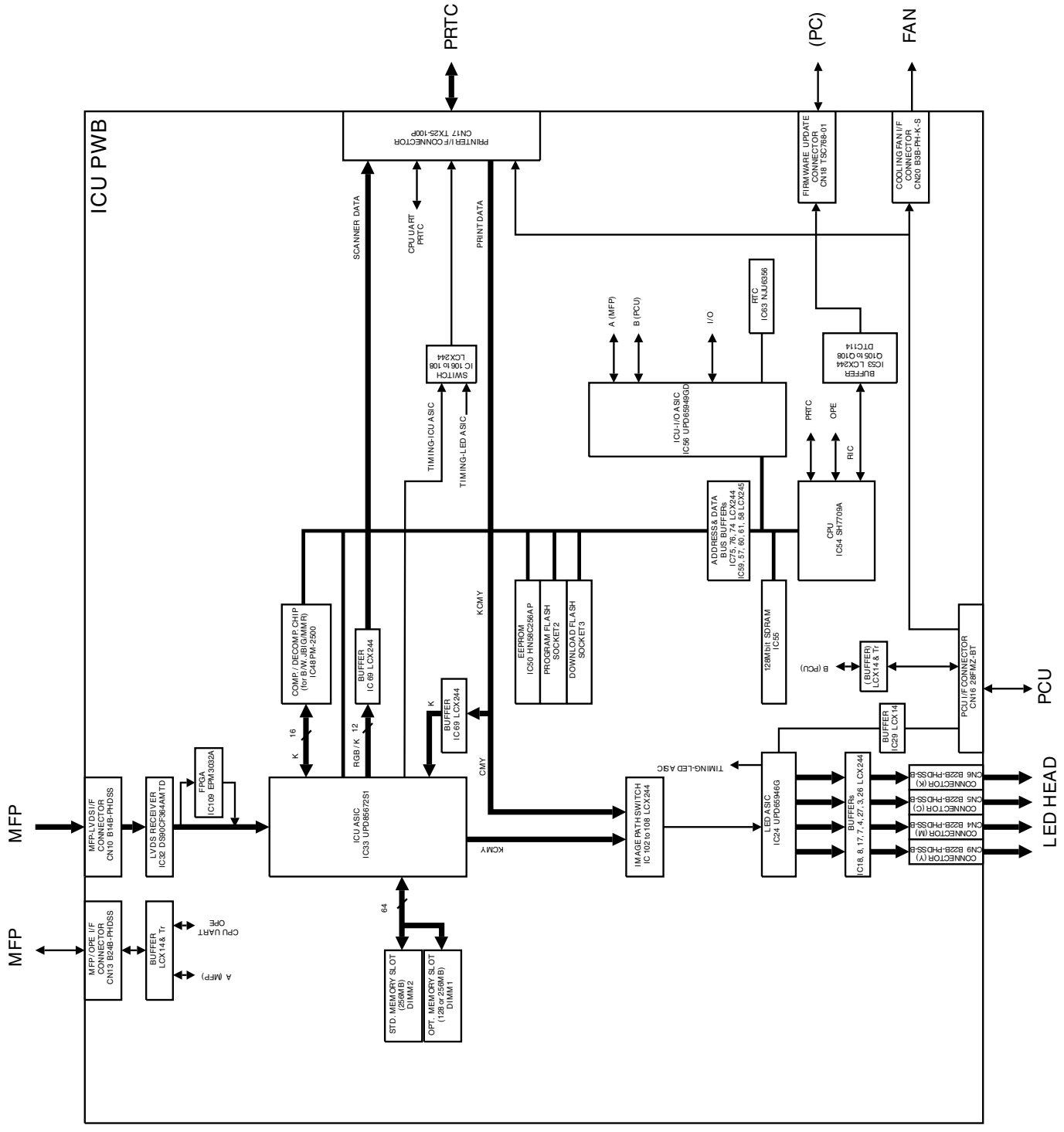
ICU PWB
PRTC
(PC)
FAN
MFP
MFP
PCU
LED HEAD
PRINTER I/F CONNECTOR CN17 TX25-100P
FIRMWARE UPDATE CONNECTOR CN18 TSC768-01
COOLING FAN I/F CONNECTOR CN20 B3B-PH-K-S
SCANNER DATA
CPU UART PRTC
PRINT DATA
SWITCH IC 106 to 108 LCX244
TIMING-ICU ASIC
TIMING-LED ASIC
A (MFP)
B (PCU)
I/O
RTC IC93 NJU6356
BUFFER IC53 LCX244 Q105 to Q108 DTC114
ICU-I/O ASIC IC56 UPD65946GD
PRTC
OPE
R/C
CPU IC54 SH7709A
ADDRESS& DATA BUS BUFFERs IC75, 76, 74 LCX244 IC59, 57, 60, 61, 58 LCX245
128Mbit SDRAM IC55
EEPROM IC50 HN58C256AP
PROGRAM FLASH SOCKET2
DOWNLOAD FLASH SOCKET3
KCMY
COMP. / DECOMP. CHIP (for B/W JBIG/MMR) IC48 PM-2500
BUFFER IC 69 LCX244
BUFFER IC69 LCX244
K
16
RGB / K
12
CMY
KCMY
B (PCU)
(BUFFER) LCX14 & Tr
BUFFER IC29 LCX14
PCU I/F CONNECTOR CN16 28FMZ-BT
TIMING-LED ASIC
IMAGE PATH SWITCH IC 102 to 108 LCX244
LED ASIC IC24 UPD65946G
BUFFERs IC18, 8, 17, 7, 27, 3, 26 LCX244
CONNECTOR (Y) CN9 B22B-PHDSS-B
CONNECTOR (M) CN4 B22B-PHDSS-B
CONNECTOR (C) CN5 B22B-PHDSS-B
CONNECTOR (K) CN6 B22B-PHDSS-B
MFP-LVDS I/F CONNECTOR CN10 B14B-PHDSS
LVDS RECEIVER IC32 DS90CF364AMTD
FPGA IC109 EPM3032A
ICU ASIC IC33 UPD98672SI
64
MFP / OPE. I/F CONNECTOR CN13 B24B-PHDSS
BUFFER LCX14& Tr
CPU UART OPE
A (MFP)
STD. MEMORY SLOT (256MB) DIMM2
OPT. MEMORY SLOT (128 or 256MB) DIMM1

C. MFP PWB

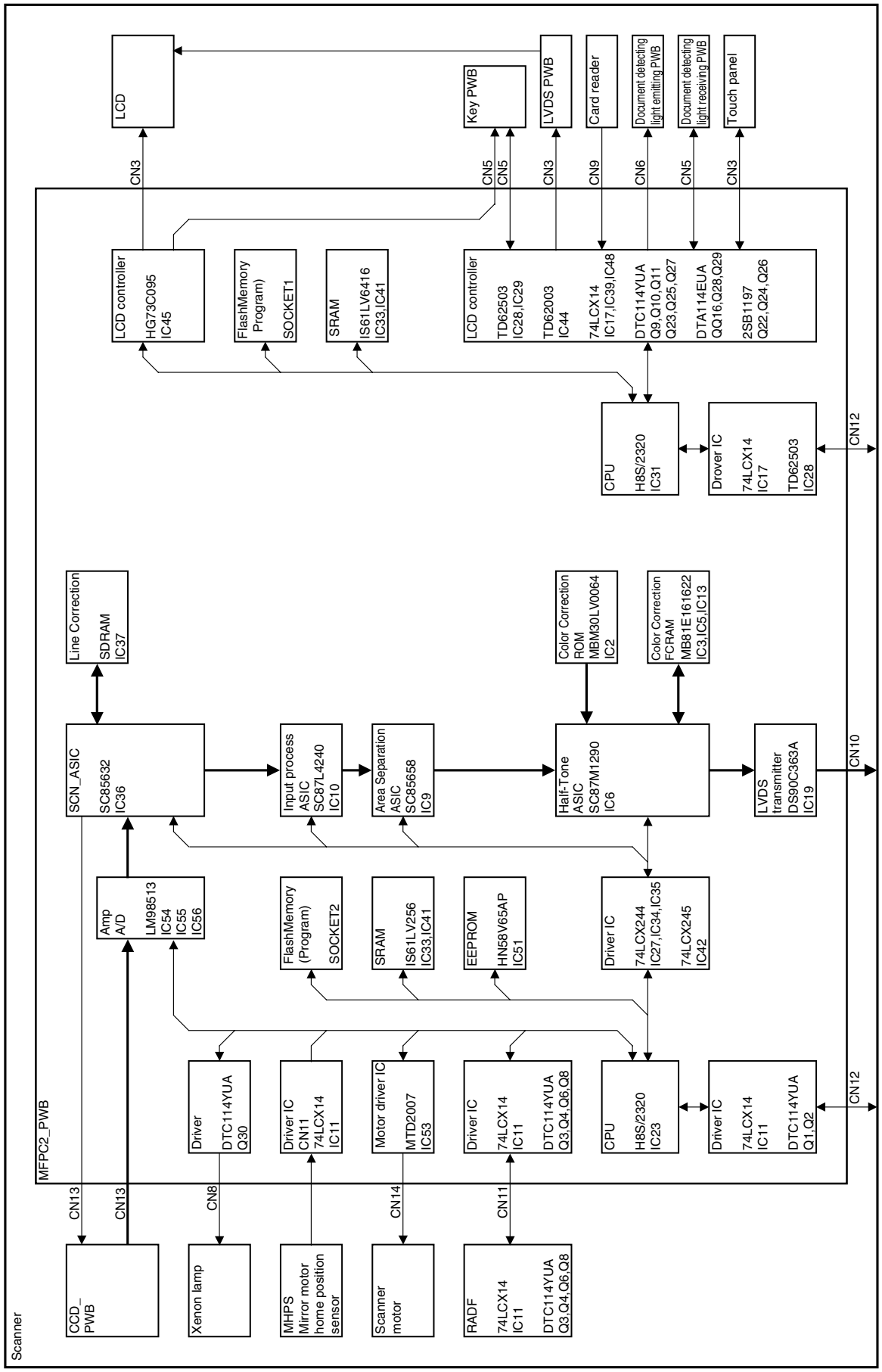
Scanner
MFPC2_PWB
LCD
Key PWB
LVDS PWB
Card reader
Document detecting light emitting PWB
Document detecting light receiving PWB
Touch panel
CN3
CN5
CN5
CN3
CN9
CN6
CN5
CN3
LCD controller HG73C095 IC45
FlashMemory Program) SOCKET1
SRAM IS61LV6416 IC33,IC41
LCD controller TD62503 IC28,IC29
TD62003 IC44
74LCX14 IC17,IC39,IC48
DTC114YUA Q9,Q10,Q11 Q23,Q25,Q27
DTA114EUA QQ16,Q28,Q29
2SB1197 Q22,Q24,Q26
CPU H8S/2320 IC31
Drover IC 74LCX14 IC17 TD62503 IC28
CN12
Line Correction SDRAM IC37
Color Correction ROM MBM30LV0064 IC2
Color Correction FCRAM MB81E161622 IC3,IC5,IC13
SCN_ASIC SC85632 IC36
Input process ASIC SC87L4240 IC10
Area Separation ASIC SC85658 IC9
Half-Tone ASIC SC87M1290 IC6
LVDS transmitter DS90C363A IC19
CN10
Amp A/D LM98513 IC54 IC55 IC56
FlashMemory (Program) SOCKET2
SRAM IS61LV256 IC33,IC41
EEPROM HN58V65AP IC51
Driver IC 74LCX244 IC27,IC34,IC35
74LCX245 IC42
Driver DTC114YUA Q30
Driver IC CN11 74LCX14 IC11
Motor driver IC MTD2007 IC53
Driver IC 74LCX14 IC11 DTC114YUA Q3,Q4,Q6,Q8
CPU H8S/2320 IC23
Driver IC 74LCX14 IC11 DTC114YUA Q1,Q2
CN12
CN13
CN13
CN8
CN14
CN11
CCD_ PWB
Xenon lamp
MHPS Mirror motor home position sensor
Scanner motor
RADF 74LCX14 IC11 DTC114YUA Q3,Q4,Q6,Q8

D. PRINT CONTROL PWB

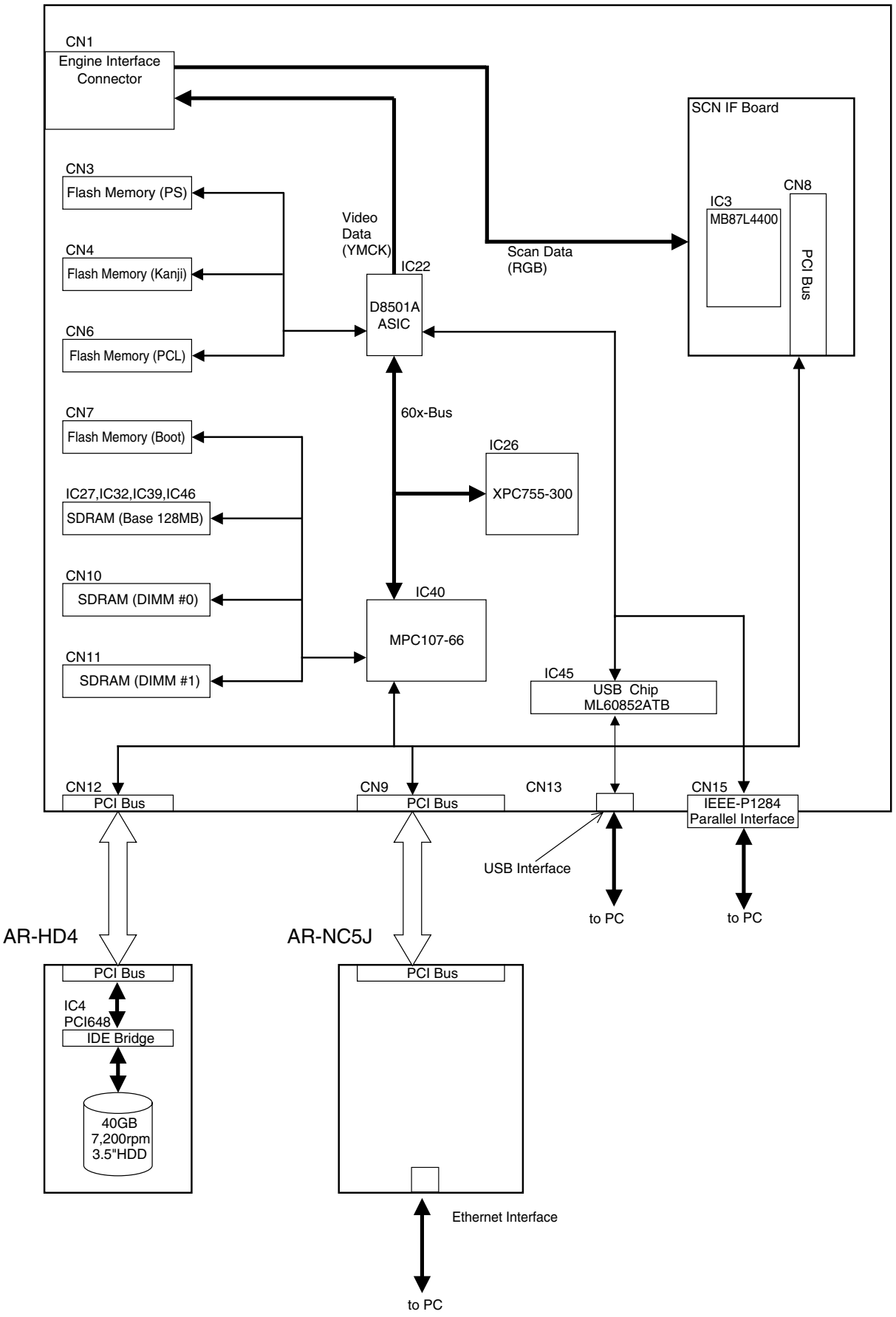

2. AC power line diagram

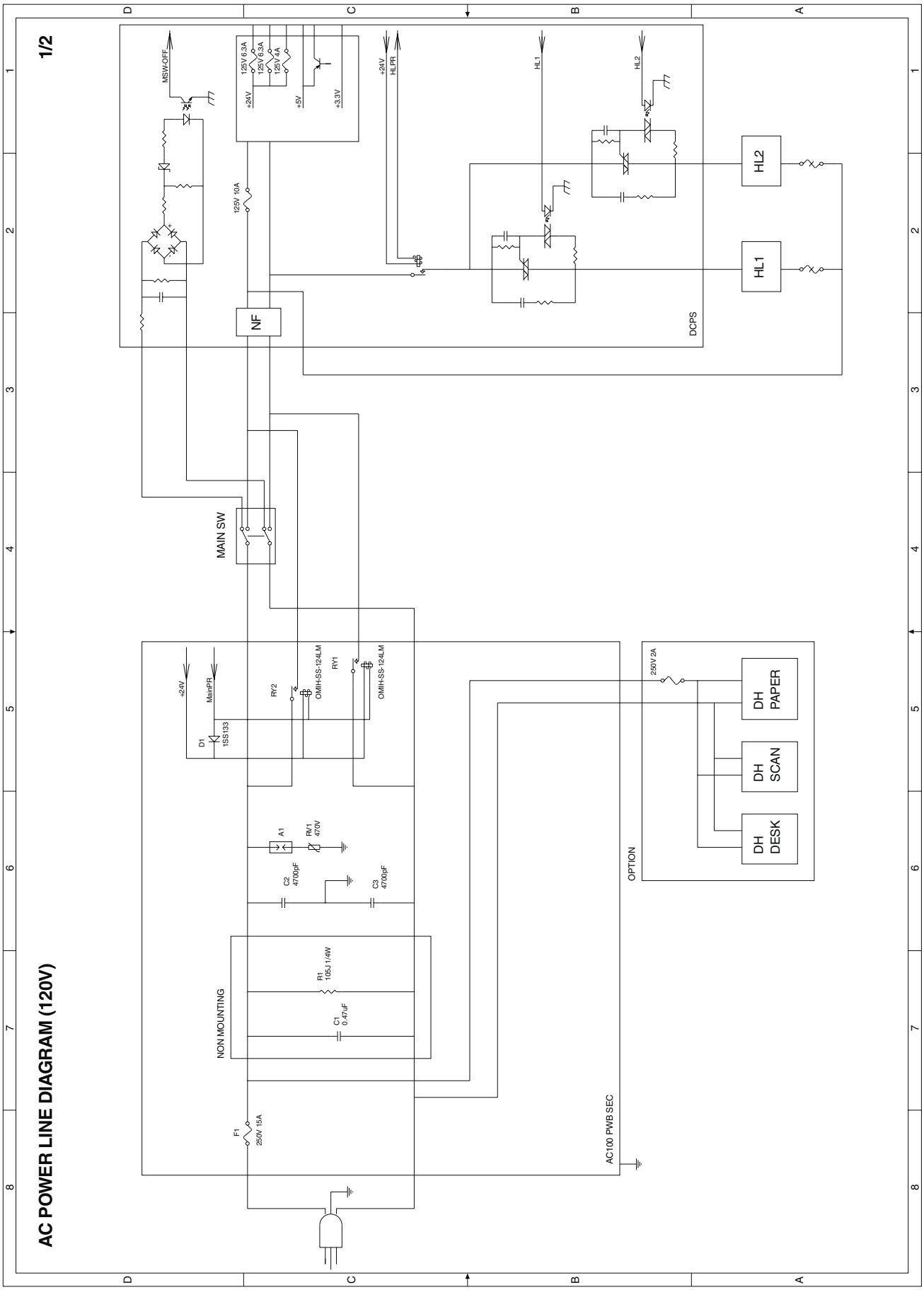

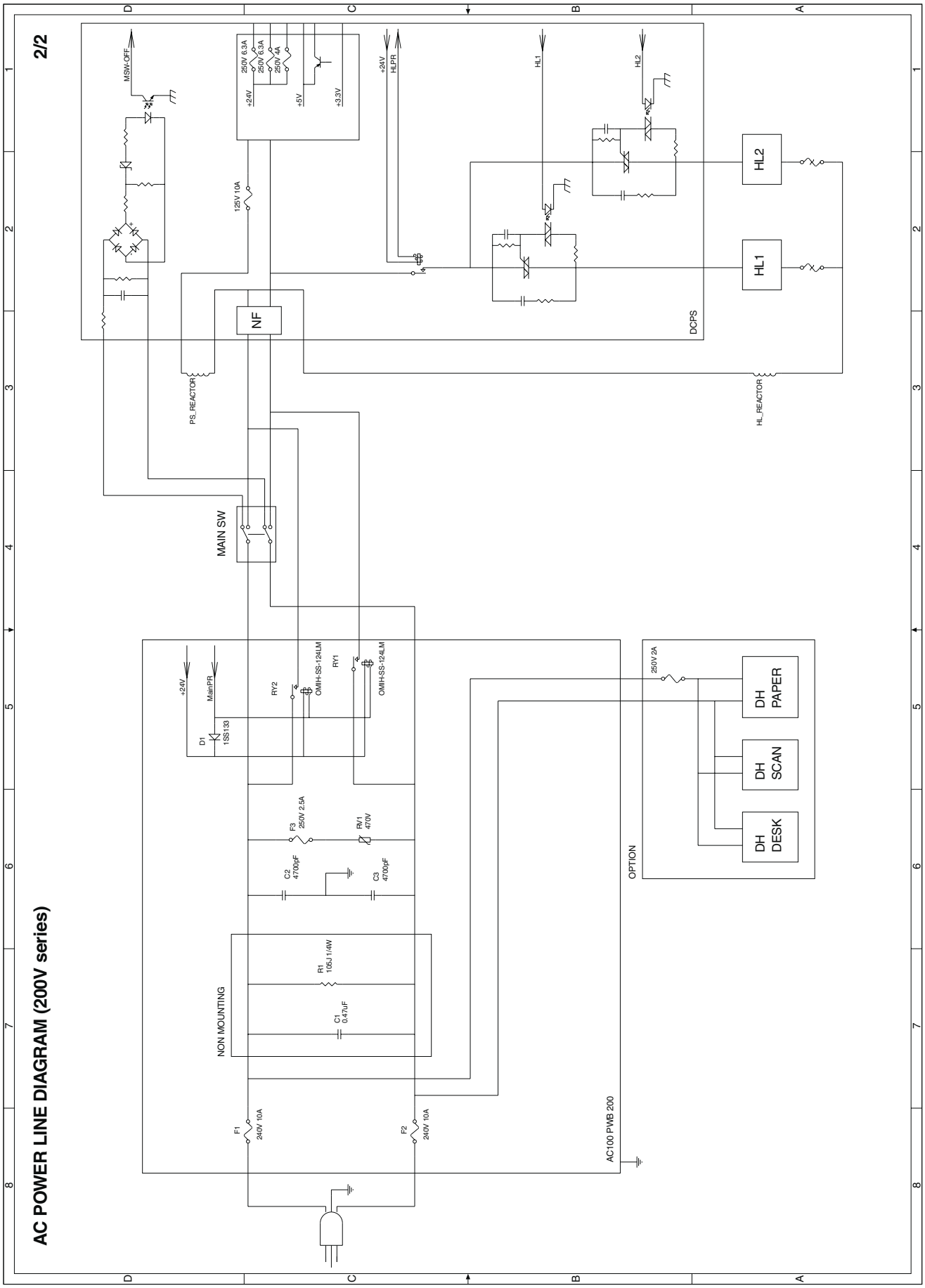
AC POWER LINE DIAGRAM (200V series)
2/2
MSW-OFF
250V 6.3A
250V 6.3A
250V 4A
+24V
+5V
+3.3V
+24V
HLPR
HL1
HL2
125V 10A
NF
DCPS
HL2
HL1
PS_REACTOR
HL_REACTOR
MAIN SW
+24V
MainPR
D1
1SS133
RY2
OMIH-SS-124LM
RY1
OMIH-SS-124LM
F3
250V 2.5A
RV1
470V
C2
4700pF
C3
4700pF
250V 2A
DH PAPER
DH SCAN
DH DESK
OPTION
NON MOUNTING
R1
105J 1/4W
C1
0.47uF
F1
240V 10A
F2
240V 10A
AC100 PWB 200

3. DC power line diagram

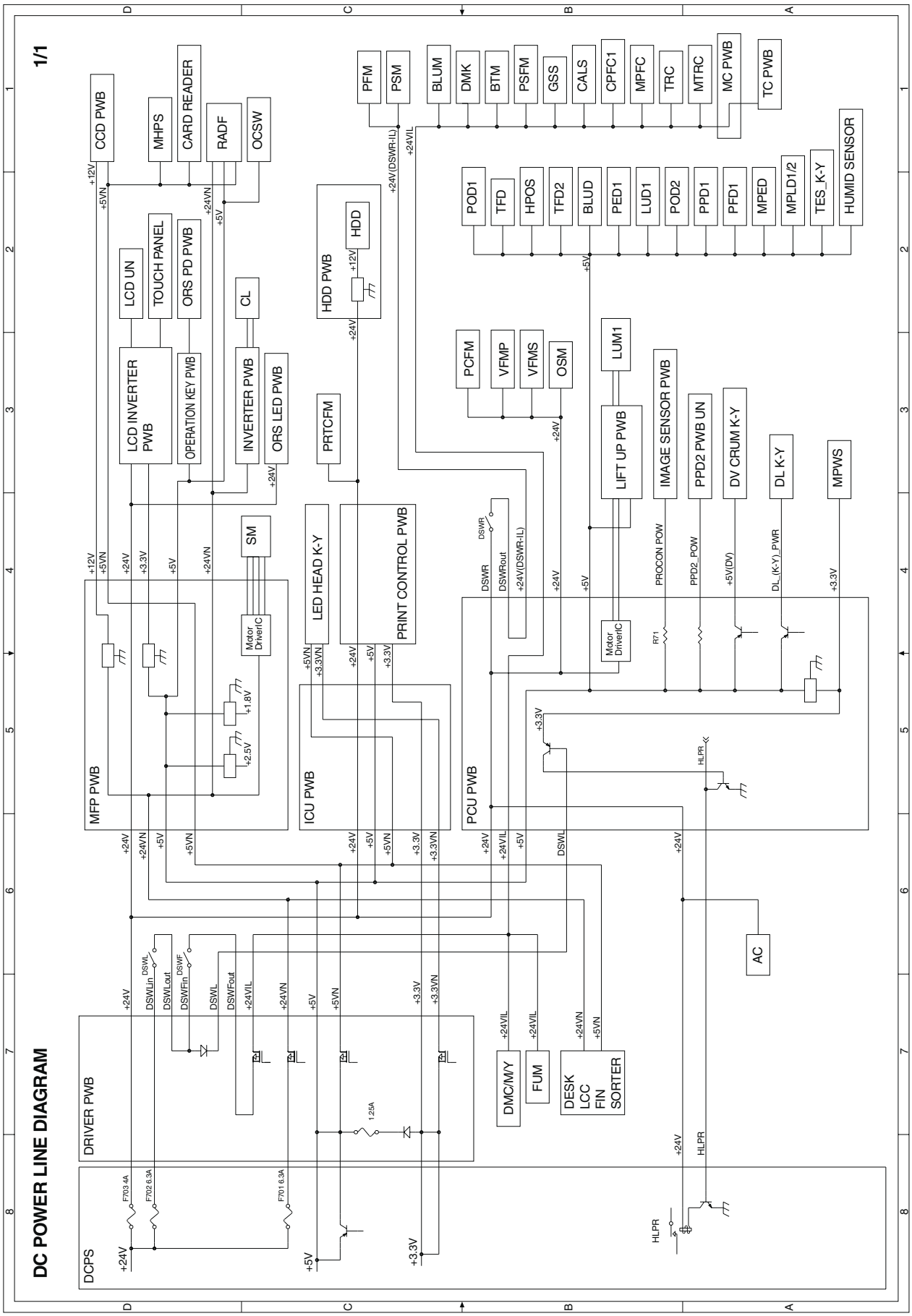

4. ACTUAL WIRING CHART

(1) POWER SECTION (100V series)

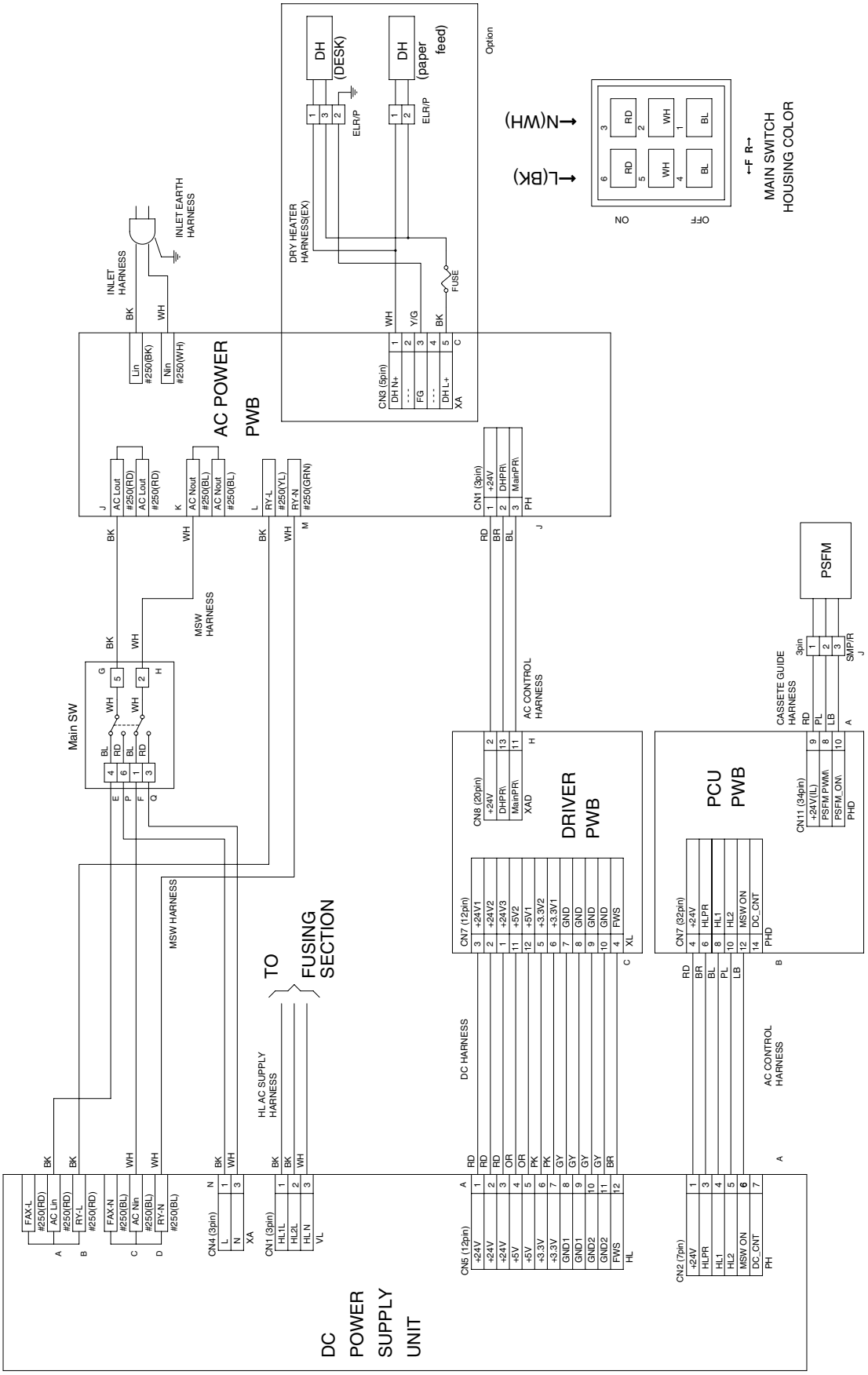

(1) POWER SECTION (200V series)

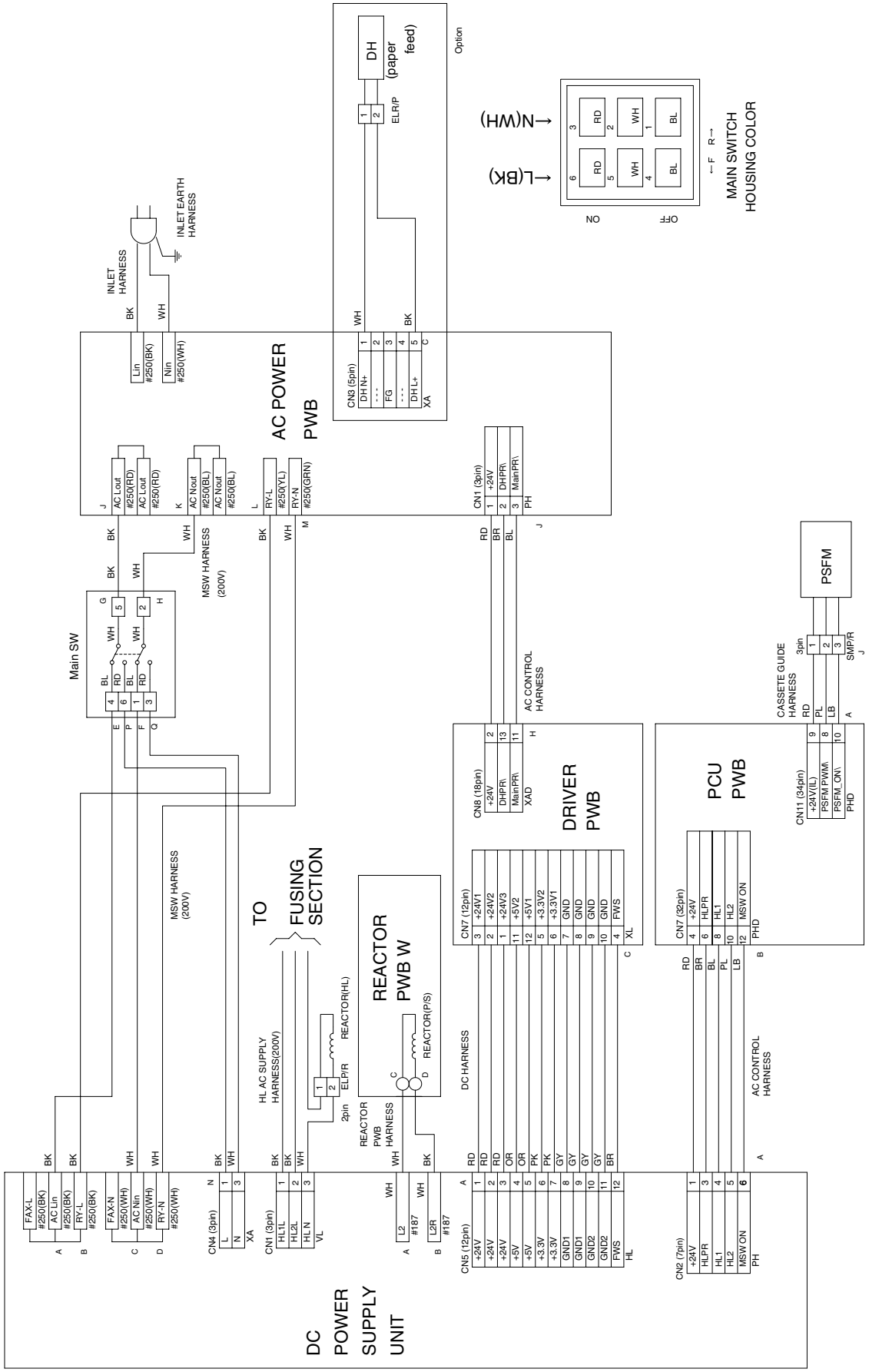

(2) DRUM DRIVE/DSW SECTION

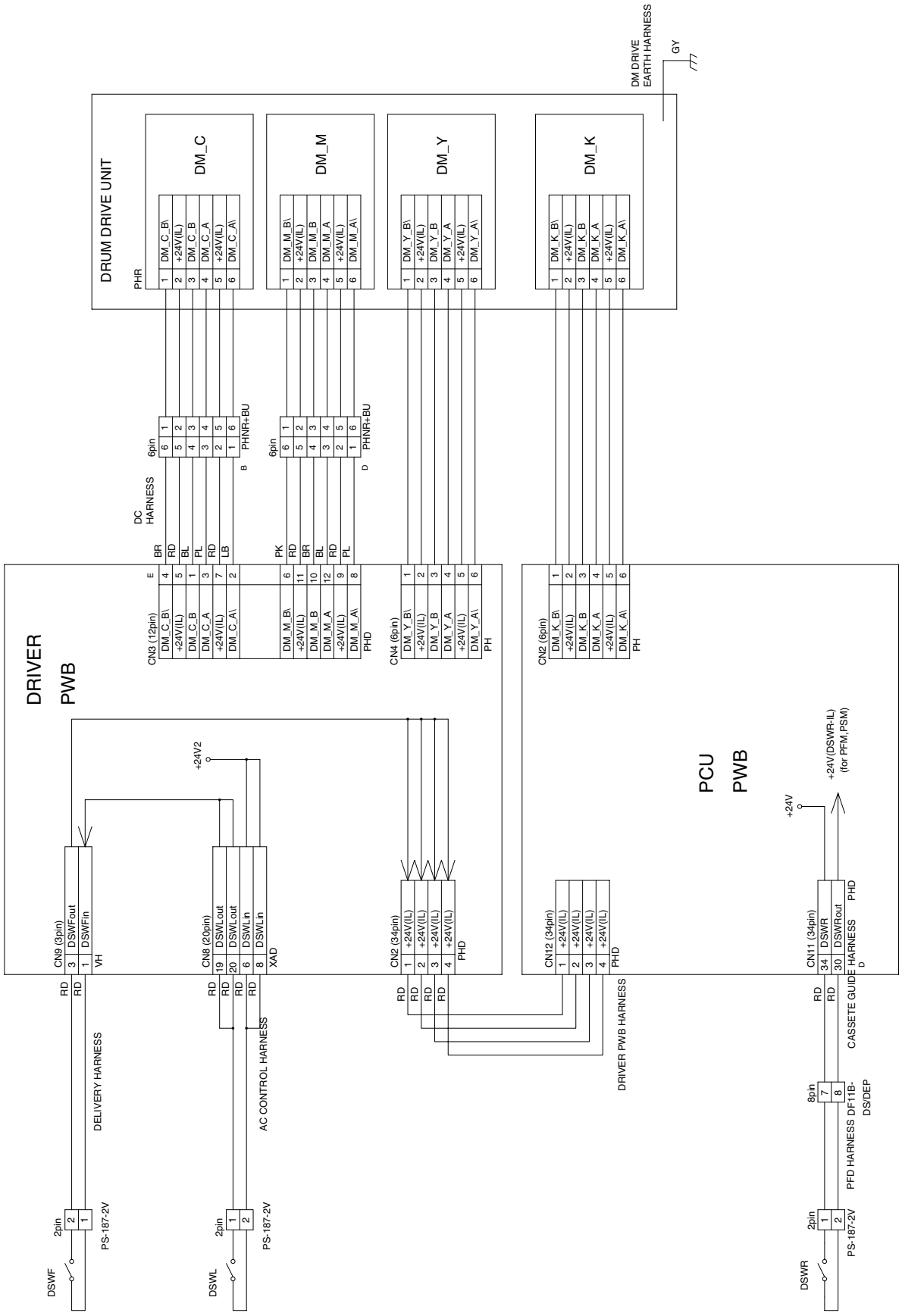

(3) IMAGE PROCESS SECTION

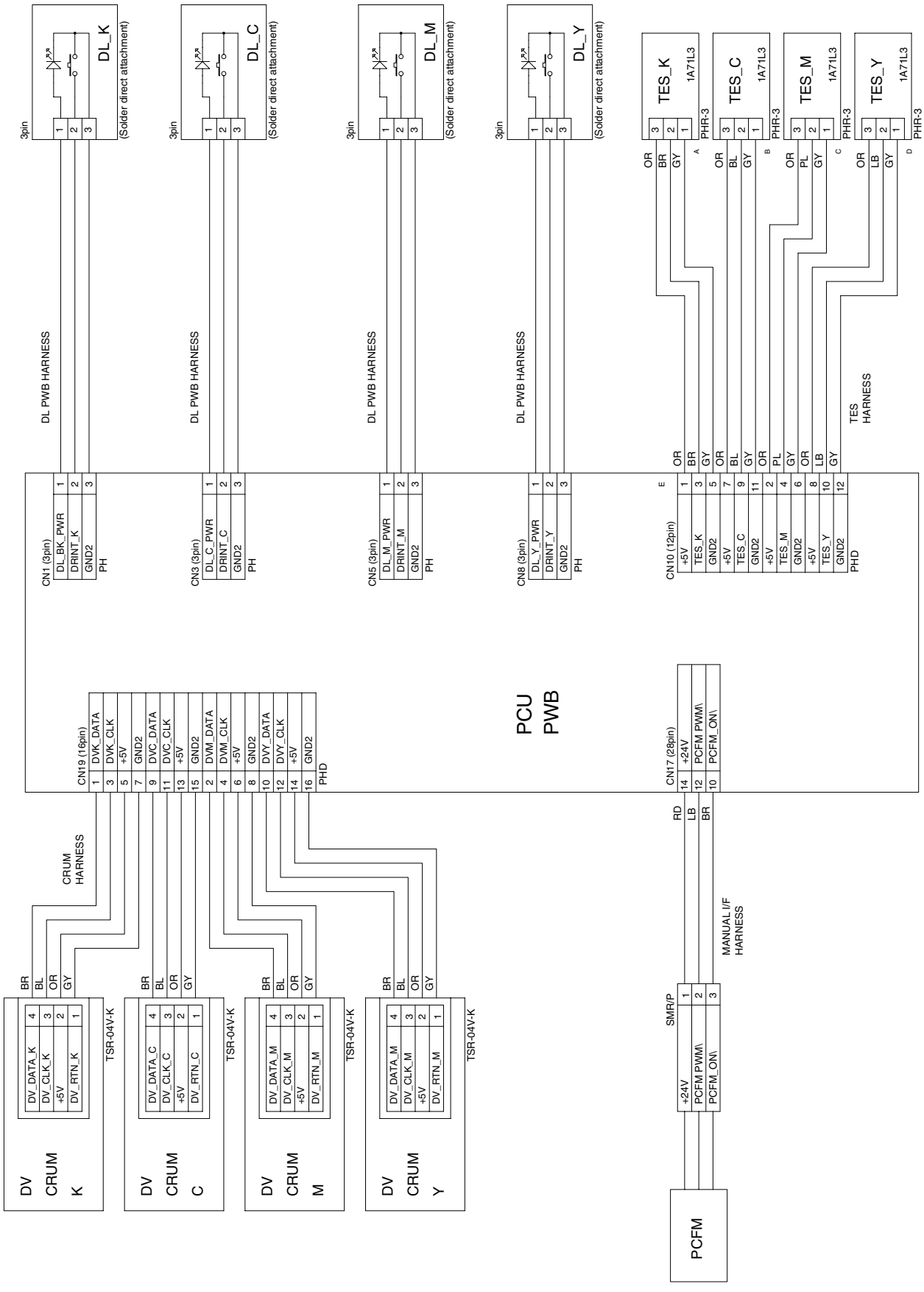

(4) HIGH VOLTAGE SECTION

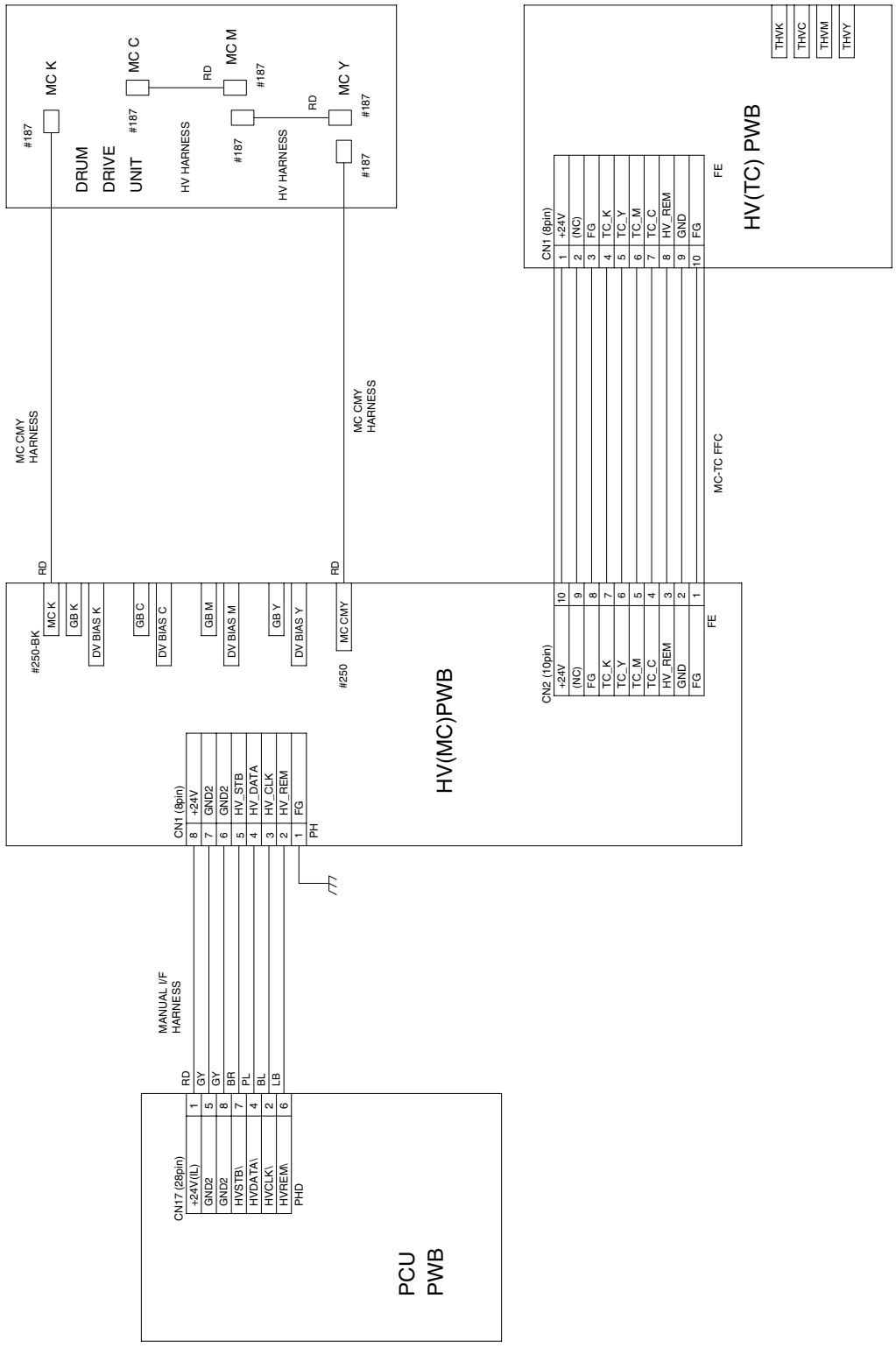

(5) MOTOR-DRIVER SECTION

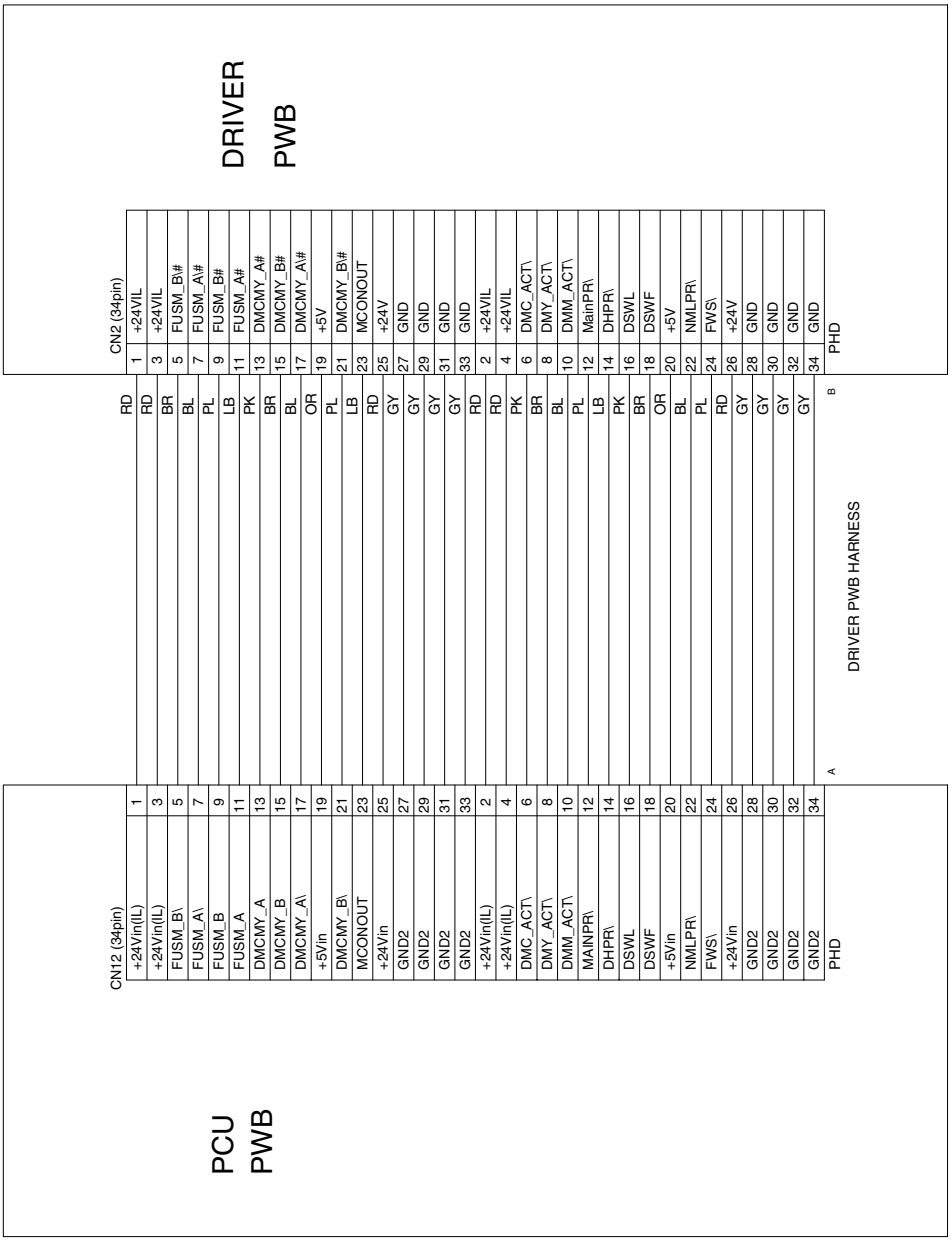

(6) PCU-ICU SECTION

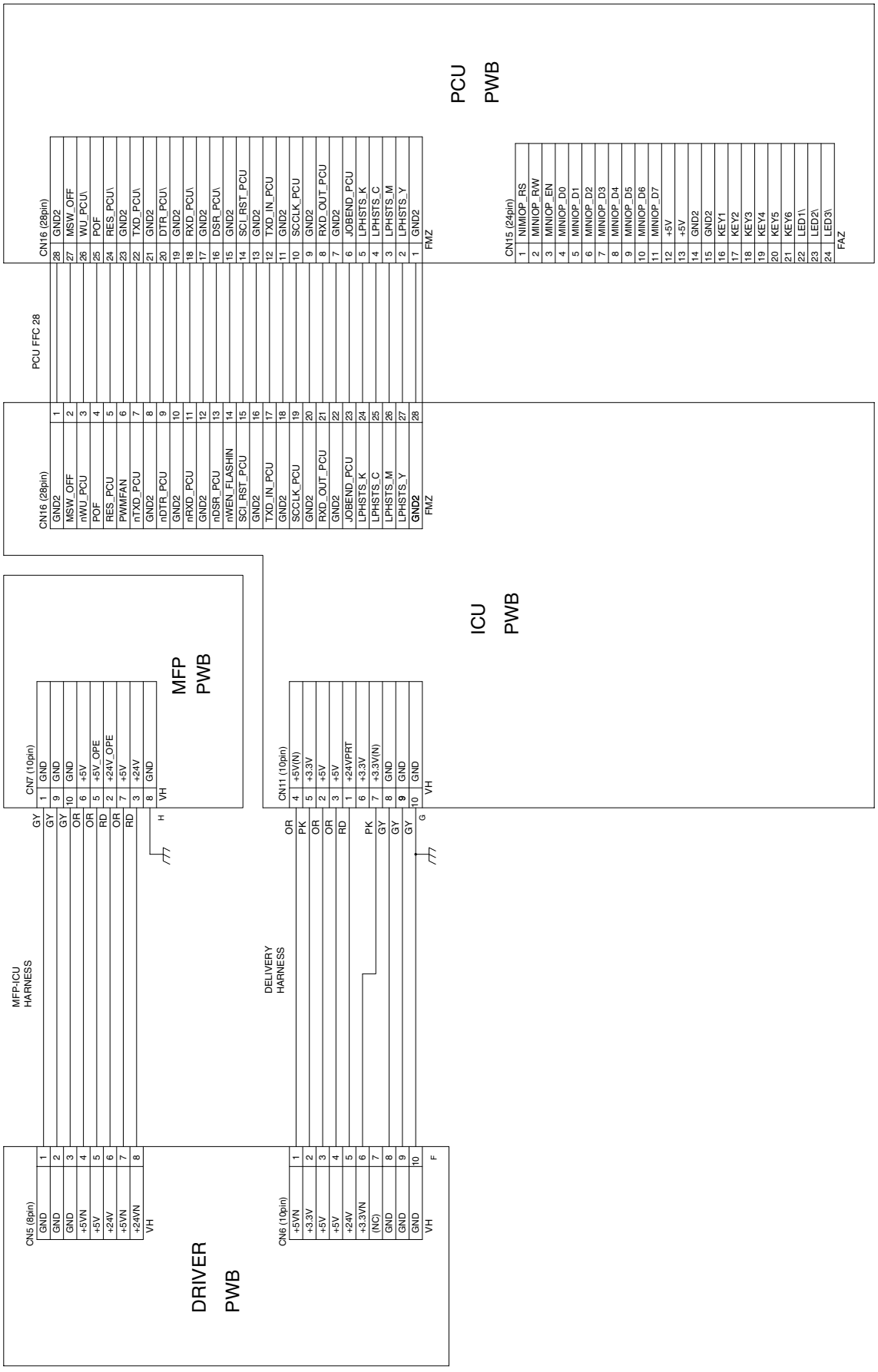

(7) PAPER TRANSPORT SECTION

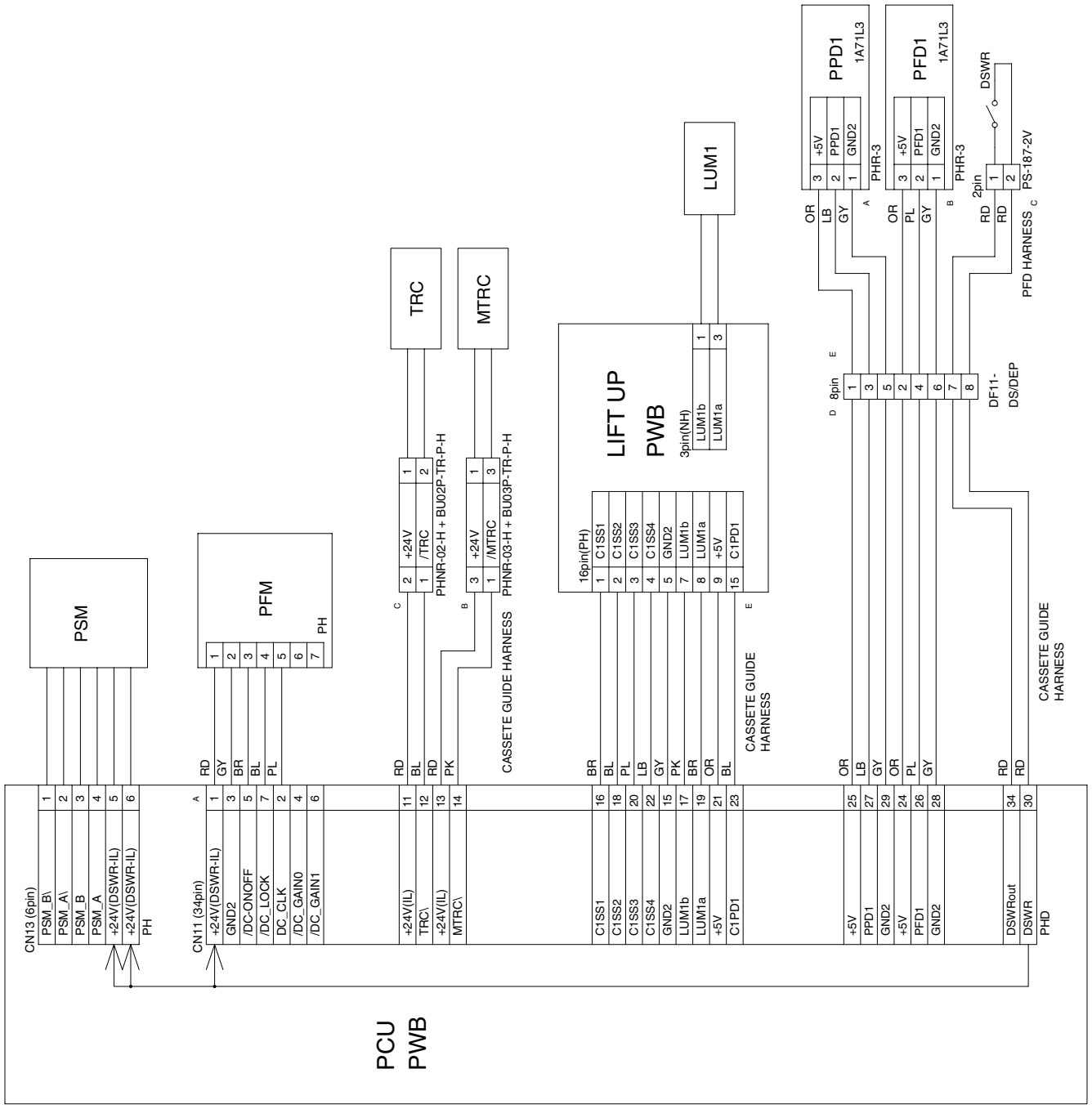

(8) TRANSFER BELT SECTION

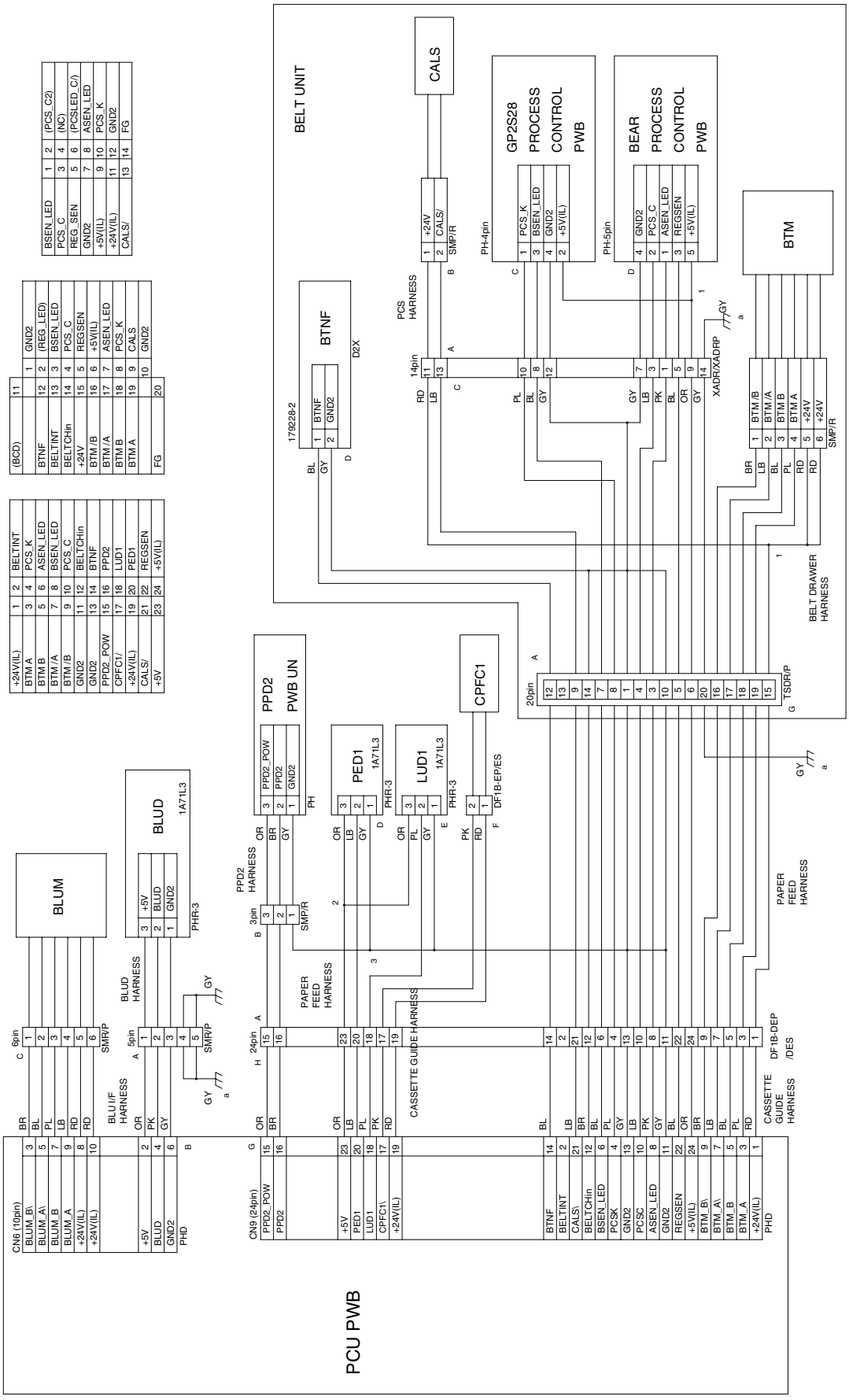

(BCD)	11		1	GND2
BTNF	12	2	(REG_LED)	
BELTINT	13	3	BSEN_LED	
BELTCHin	14	4	PCS_C	
+24V	15	5	REGSEN	
BTM /B	16	6	+5V(IL)	
BTM /A	17	7	ASEN_LED	
BTM B	18	8	PCS_K	
BTM A	19	9	CALS	
		10	GND2	
FG	20			

+24V(IL)	1	2	BELTINT
BTM A	3	4	PCS_K
BTM B	5	6	ASEN_LED
BTM /A	7	8	BSEN_LED
BTM /B	9	10	PCS_C
GND2	11	12	BELTCHin
GND2	13	14	BTNF
PPD2_POW	15	16	PPD2
CPFC1/	17	18	LUD1
+24V(IL)	19	20	PED1
CALS/	21	22	REGSEN
+5V	23	24	+5V(IL)

BSEN_LED	1	2	(PCS_C2)
PCS_C	3	4	(NC)
REG_SEN	5	6	(PCSLED_C/)
GND2	7	8	ASEN_LED
+5V(IL)	9	10	PCS_K
+24V(IL)	11	12	GND2
CALS/	13	14	FG

(9) FUSING SECTION (100V series)

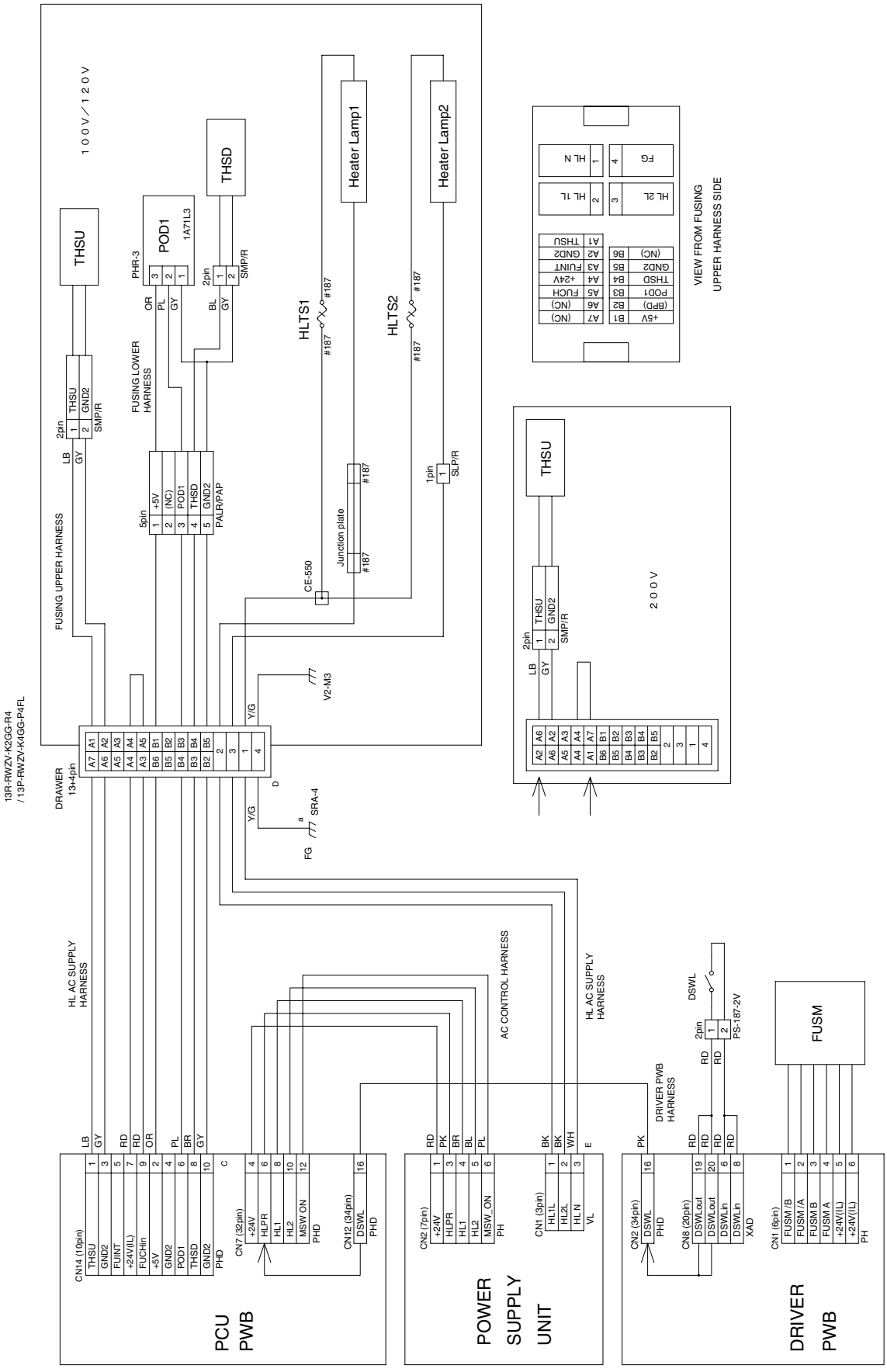

(9) FUSING SECTION (200V series)

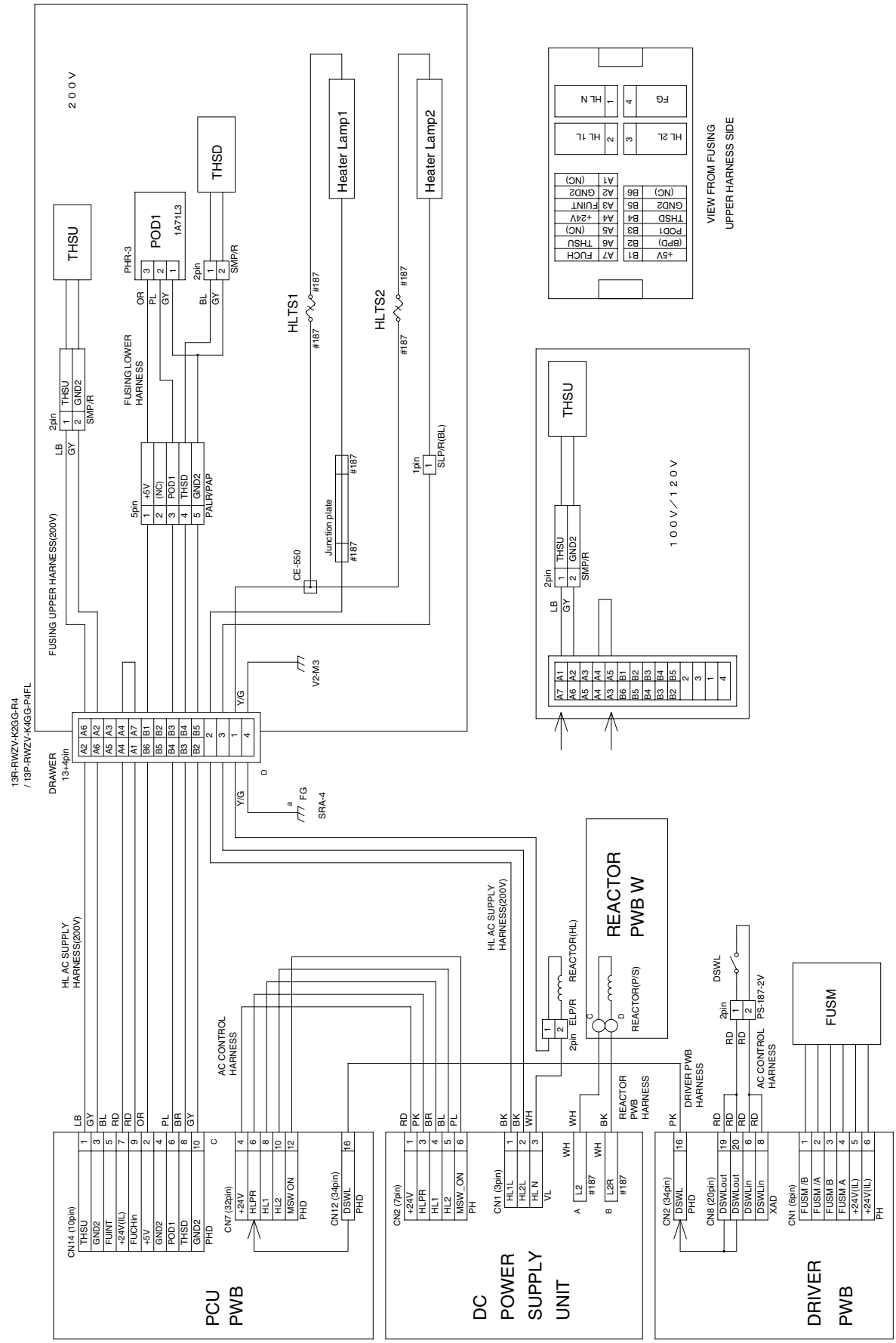

(10) PAPER EXIT SECTION

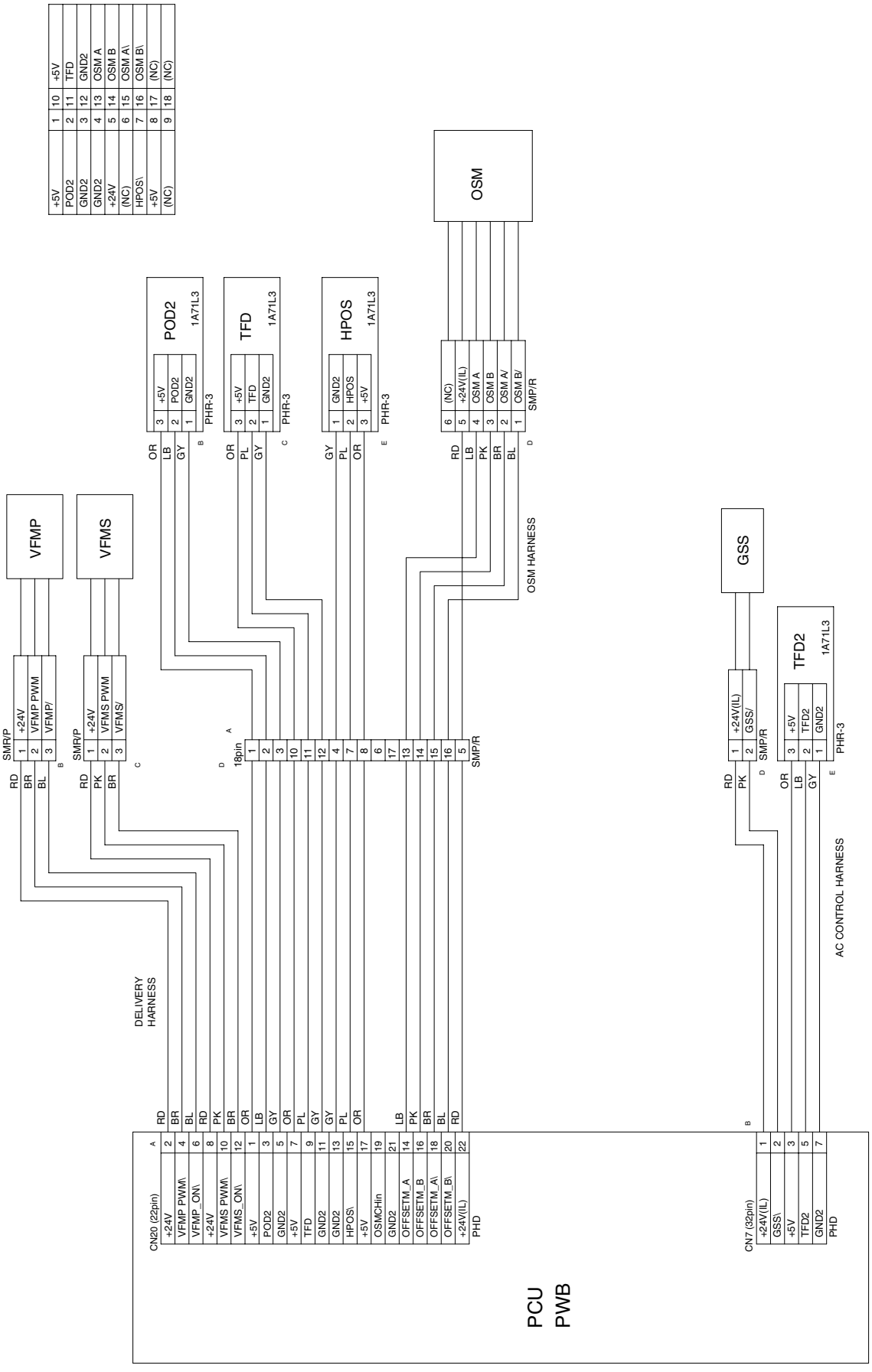

(11) MANUAL PAPER FEED SECTION

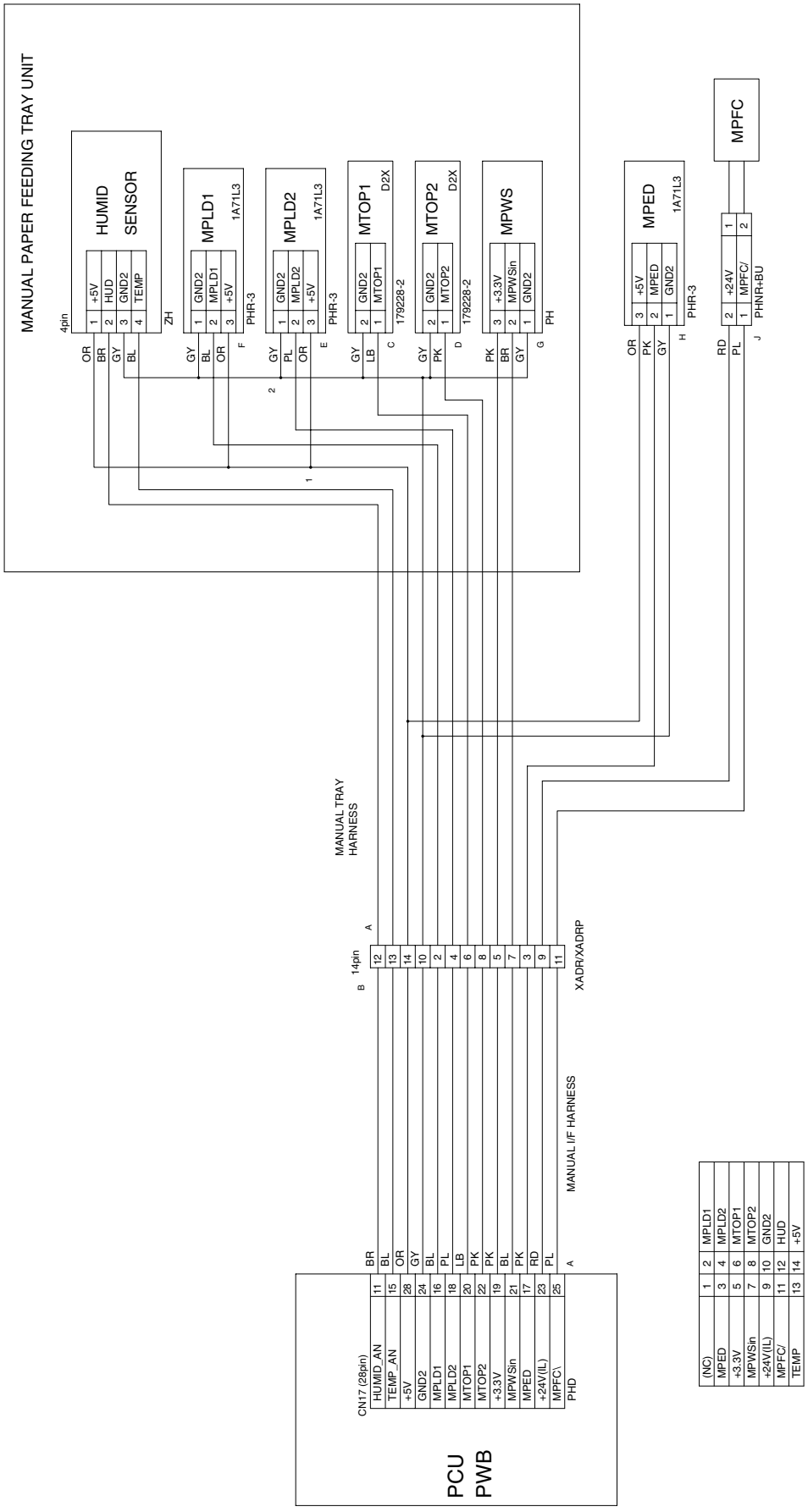

(12) LED-HEAD SECTION

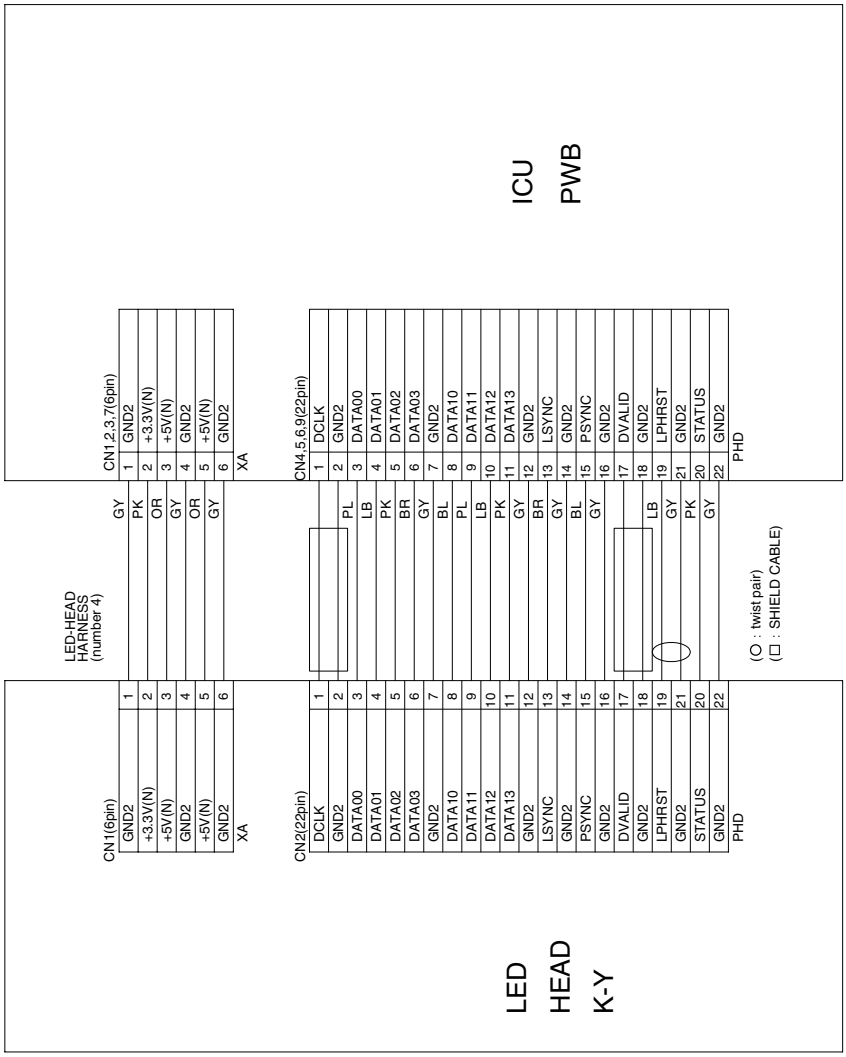

(13) DESK SECTION

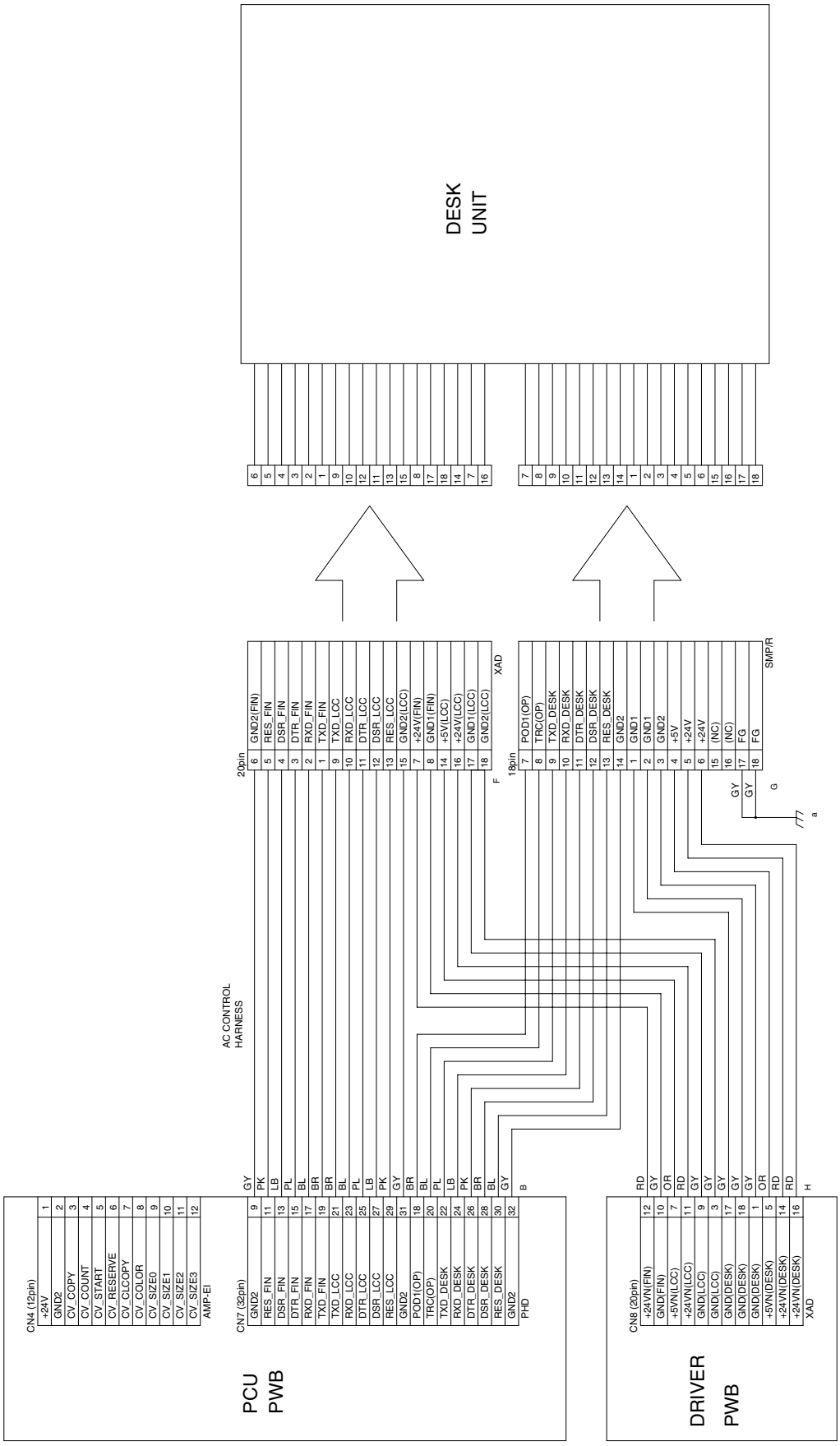

(14) IMAGE SCANNER SECTION

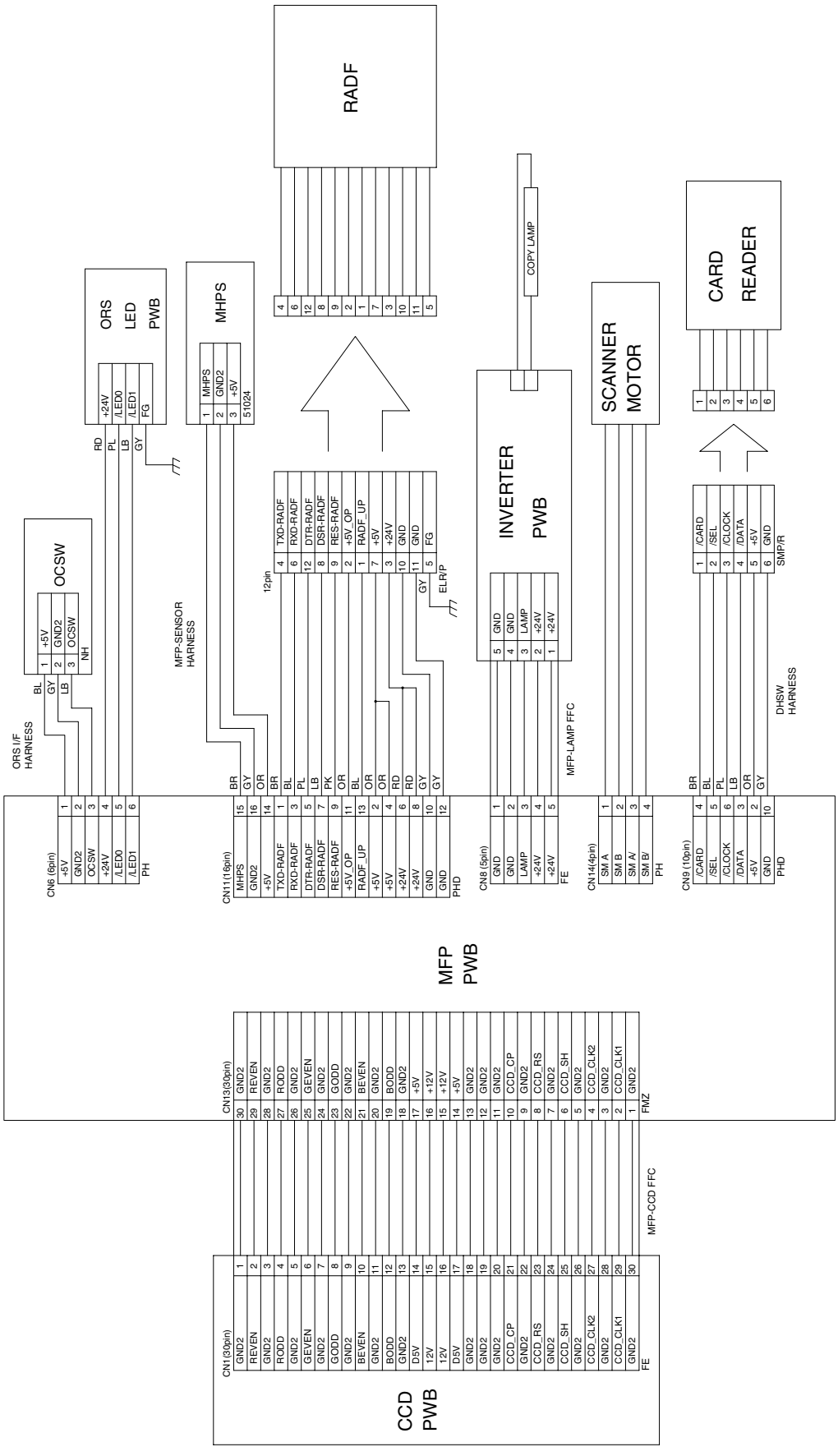

(15) OPERATION SECTION

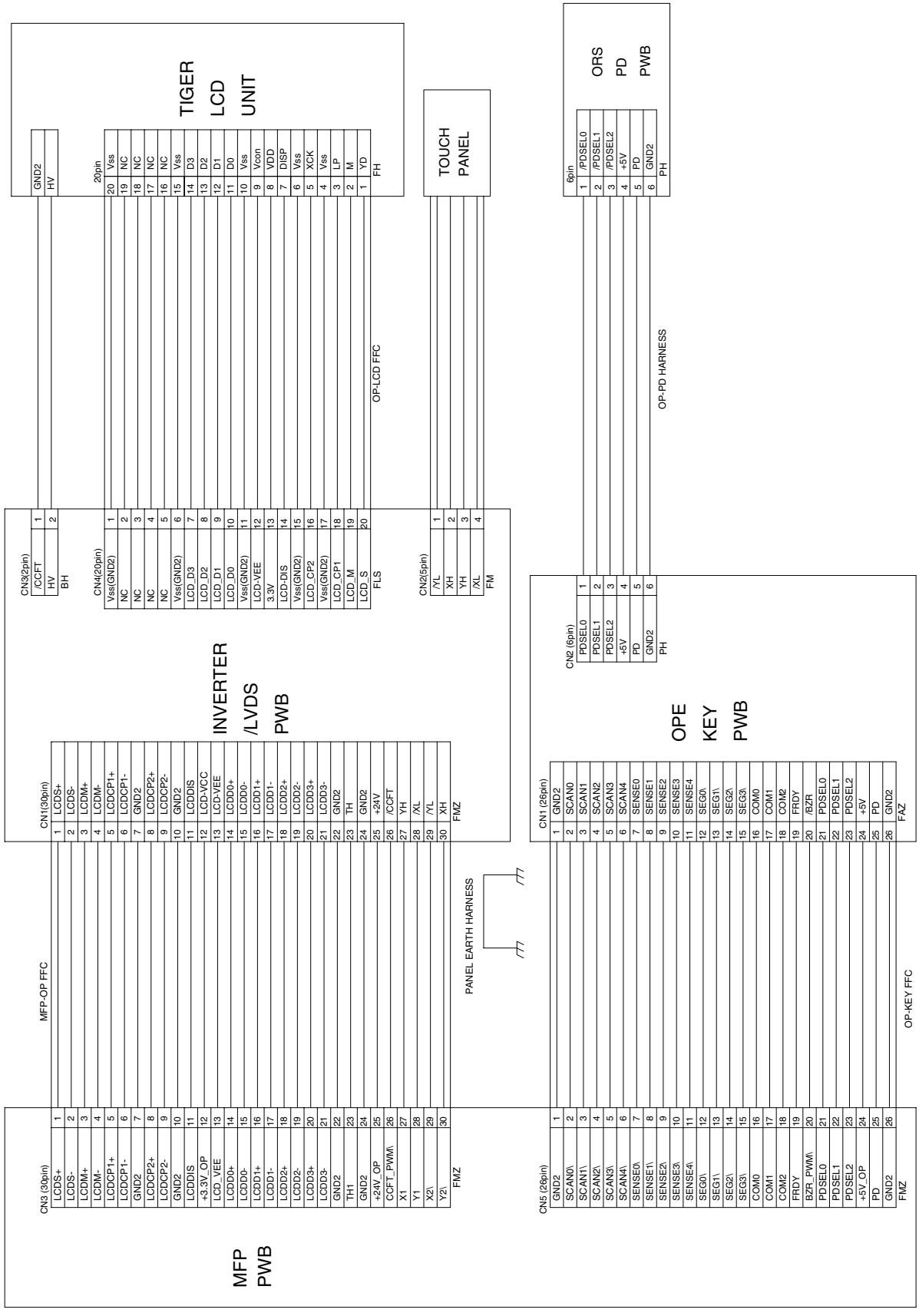

(16) ICU SECTION

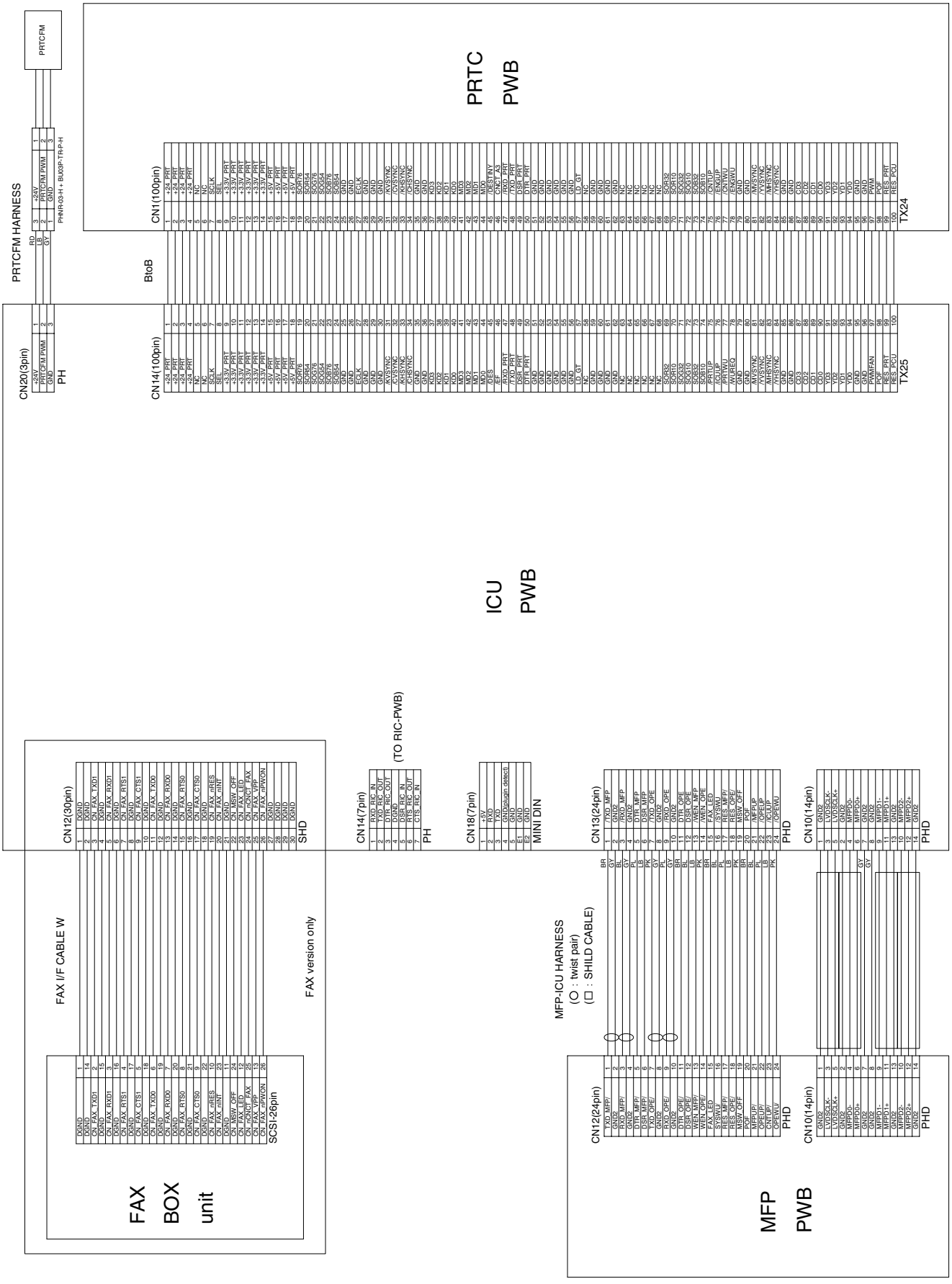

5. Signal list

Signal name	Name	Function/Operation	Section
AOSW	ADF open switch	Detects ADF open.	AR-RF3
APAM	Alignment motor	Aligns paper in ADU.	AR-D19
APHPS	Alignment plate home position detection	Detects the alignment plate in ADU.	AR-D19
APPD1	ADU transport sensor 1	Detects paper transport in ADU.	AR-D19
APPD2	ADU transport sensor 2	Detects paper transport in ADU.	AR-D19
ARHPS	Bundle roller HP sensor		AR-F13
AS	Alignment tray sensor		AR-F13
ATM	ADU transport motor	Drives the paper transport section in ADU.	AR-D19
ATRC	ADU transport clutch	Controls ON/OFF of the transport roller in ADU.	AR-D19
BDD	Door open detection 1	Detects upper door open.	AR-RB1
BDD2	Door open detection 2	Detects left door open.	AR-RB1
BES	Tray paper sensor		AR-F13
BGSOL	Gate solenoid	Switches straight or reverse paper exit.	AR-RB1
BIM	Paper entry motor	Transports paper in the paper entry section.	AR-RB1
BLUD	Belt lift-up upper limit detection	Detects if the transfer belt is lifted up or down.	Main machine
BLUM	Belt lift-up motor	Lifts the transfer belt unit.	Main machine
BPFD	Full sensor	Detects paper full on the tray.	AR-RB1
BPOD	Paper exit sensor	Detects paper exit.	AR-RB1
BPPD1	Transport sensor 1	Detects paper transport.	AR-RB1
BPPD2	Transport sensor 2	Detects paper transport.	AR-RB1
BPRD	Reverse section sensor	Detects paper presence in the reverse section.	AR-RB1
BRM	Upper reverse motor	Transports paper in the upper section.	AR-RB1
BTM	Transport belt motor	Drives the transfer belt.	Main machine
BTM	Lower reverse motor	Transports paper in the lower section.	AR-RB1
BTNF	Belt waste toner detection	Detects belt waste toner full.	Main machine
C1SS1	1 cassette paper size detection 1	Detects the paper size which is set by the paper size set block.	Main machine
C1SS2	1 cassette paper size detection 2	Detects the paper size which is set by the paper size set block.	Main machine
C1SS3	1 cassette paper size detection 3	Detects the paper size which is set by the paper size set block.	Main machine
C1SS4	1 cassette paper size detection 4	Detects the paper size which is set by the paper size set block.	Main machine
CALS	Calibration plate open/close solenoid	Switches image density sensors.	Main machine
CPFC1	Paper feed clutch	Transmits the paper feed motor power to each transport roller. (Controls ON/OFF.)	Main machine
DCSPSx	Paper remaining quantity sensor	Detects the remaining quantity of paper.	AR-D17/D18
DCSSx	Paper size sensor	Detects the paper size.	AR-D17/D18/D19
DDOPD	Door open sensor	Detects opening of the right door.	AR-D17/D18
DEM	Reverse motor	Reverses or discharges documents.	AR-RF3
DEOS	Paper exit open sensor	Detects opening of the paper exit cover.	AR-RF3
DES	Paper exit sensor	Detects that a document has been transported to the paper exit sensor section.	AR-RF3
DFM	Paper feed motor	Feeds a document from the tray.	AR-RF3
DFOS	Paper feed open sensor	Detects opening of the paper feed cover.	AR-RF3
DFSW	Paper feed open switch	Detects opening of the paper feed cover.	AR-RF3
DH	Dehumidifier heater	Dehumidifier heater for the machine cassette.	Main machine
DH (Japan only)	Dehumidifier heater 1	Dehumidifies the scanner section.	Main machine
DH (Japan only)	Dehumidifier heater 2	Dehumidifies the lens section.	Main machine
DHSW (Japan only)	Dehumidifier heater switch	Turns ON/OFF the power line of the dehumidifier heaters provided in the scanner (reading) section and the paper feed section.	Main machine
DLMx	Lift motor	Drives the lift plate.	AR-D17/D18/D19
DLS1	Tray document length sensor 1	Detects the document length on the tray. (Short)	AR-RF3
DLS2	Tray document length sensor 2	Detects the document length on the tray. (Long)	AR-RF3
DLUDx	Paper upper limit sensor	Detects the paper upper limit position.	AR-D17/D18/D19
DM	Paper feed drive motor	Drives the paper feed section and the paper transport section.	AR-D17/D18/D19
DM_C	Drum motor (C)	Drives the Cyan photoconductor unit.	Main machine
DM_K	Drum motor (K)	Drives the Black photoconductor unit.	Main machine
DM_M	Drum motor (M)	Drives the Magenta photoconductor unit.	Main machine
DM_Y	Drum motor (Y)	Drives the Yellow photoconductor unit.	Main machine
DPEDx	Paper empty sensor	Detects paper presence on the paper tray.	AR-D17/D18/D19
DPFCx	Paper feed clutch	Controls ON/OFF of the paper feed roller.	AR-D17/D18/D19
DPFSx	Pickup solenoid	Presses the paper pickup roller onto paper.	AR-D17/D18/D19
DPPD1	Paper transport sensor 1	Detects paper transport.	AR-D17/D18/D19
DPPD2	Paper transport sensor 2	Detects paper transport.	AR-D17/D18
DPPD3	Paper transport sensor 3	Detects paper transport.	AR-D17/D18

Signal name	Name	Function/Operation	Section
DRS	Reverse sensor	Detects that a document has been transported to the reverse sensor section.	AR-RF3
DRSOL	Reverse solenoid	Switches the flapper in duplex operation.	AR-RF3
DSWF	Front door open detection	Detects opening of the front door.	Main machine
DSWL	Paper exit door open detection	Detects opening of the paper exit door.	Main machine
DSWR	Paper feed door open detection	Detects opening of the paper feed door.	Main machine
DTM	Transport motor	Transports a document on the document glass,	AR-RF3
DTRC	Transport clutch	Controls ON/OFF of the transport roller.	AR-D17/D18/D19
DUSTPTR	Punch dust full sensor	Detects punch dust full.	AR-F13
DWVR	Document width detection volume	Detects the document width on the tray.	AR-RF3
EMPS	Empty sensor	Detects document presence on the paper feed tray.	AR-RF3
ES	Entry port sensor		AR-F13
FAM	Bundle exit sensor		AR-F13
FDS	Front door sensor		AR-F13
FDSW	Front door switch		AR-F13
FE	Bookbinding clock sensor		AR-F13
FES	Bookbinding paper senor		AR-F13
FFJM	Alignment motor (F)		AR-F13
FFM	Transport motor		AR-F13
FFSM	Stapler/Folding motor staple operation/ Paper folding operation		AR-F13
FHPS	Bookbinding HP sensor		AR-F13
FJHPS	Alignment HP sensor		AR-F13
FLM	Shift motor		AR-F13
FOS	ADF front open sensor	Detects opening of ADF.	AR-RF3
FPM	Paddle motor oscillation guide drive, discharge to offset tray		AR-F13
FPNM	Punch motor		AR-F13
FPS	Bookbinding position sensor		AR-F13
FPSM	Puncher side registration motor		AR-F13
FRHPS	Bookbinding roller HP sensor		AR-F13
FRJM	Alignment motor (R)		AR-F13
FSM	Slide motor staple unit shift		AR-F13
FUSM	Fusing drive motor	Drives the fusing unit.	Main machine
GSS	Face up/down switch gate solenoid	Drives the face-up/down switch gate.	Main machine
HLTS1	Upper heat roller thermostat	Detects an abnormally high temperature to turn off the heater lamp.	Main machine
HLTS2	Lower heat roller thermostat	Detects an abnormally high temperature to turn off the heater lamp.	Main machine
HPOS	Offset home position sensor	Detects the offset home position.	Main machine
HUD	Humidity sensor	Detects the humidity.	Main machine
JS	Joint switch		AR-F13
LDD	Lower limit detector		AR-LC5
LE	Lift lock sensor		AR-F13
LEDONx	Paper size sensor	Detects the paper size.	AR-F13
LLLS	Lift lower limit sensor		AR-F13
LLM	Lift-up motor		AR-LC5
LLSW	Upper limit lock switch		AR-LC5
LPED	Paper detector		AR-LC5
LPFC	Paper clutch		AR-LC5
LPFD	Transport detector		AR-LC5
LPFM	Paper feed and transport motor		AR-LC5
LPFS	Pick-up solenoid		AR-LC5
LRES	Encoder sensor		AR-LC5
LTOD	Copier connection detector		AR-LC5
LTRC	Paper feed clutch		AR-LC5
LUD	Upper limit detector		AR-LC5
LUD1	1 cassette lift-up upper limit detection	Detects the paper upper limit position.	Main machine
LUM1	1 cassette lift-up motor	Drives the lift plate.	Main machine
MHPS	Mirror home position sensor	Detects the scanner home position.	Main machine
MPED	Manual feed paper empty sensor	Detects paper presence on the paper tray.	Main machine
MPFC	Manual paper feed clutch	Controls ON/OFF of the paper feed roller. Presses the paper pickup roller onto paper.	Main machine
MPLD1	Manual paper length detection 1	Detects the paper length.	Main machine
MPLD2	Manual paper length detection 2	Detects the paper length.	Main machine

Signal name	Name	Function/Operation	Section
MPWS	Manual paper width detection	Detects the paper width.	Main machine
MSW	Main switch	Turns ON/OFF the main power.	Main machine
MTOP1	Manual tray pull-out detection 1	Detects the paper tray position.	Main machine
MTOP2	Manual tray pull-out detection 2	Detects the paper tray position.	Main machine
MTRC	Manual feed drive clutch	Transmits drive power to the manual paper feed unit.	Main machine
OBHPS	Paper exit belt HP sensor		AR-F13
OCSW	O/G open sensor	Detects opening of the document cover. (Generates the document size detection timing signal.)	Main machine
OSM	Offset motor (Slide motor)	Drives the paper offset.	Main machine
PCFM	Process cooling fan motor	Exhaust and cools the process section.	Main machine
PCS_C	Color toner concentration (process control) sensor	Detects the toner patch density (color toner) in image density correction.	Main machine
PE	Punch motor encoder		AR-F13
PED1	1 cassette paper empty detection	Detects paper presence on the paper tray.	Main machine
PFD1	1 cassette paper feed detection	Detects paper delivery from No. 1 paper tray.	Main machine
PFM	Paper feed motor	Drives the paper feed section and the paper transport section.	Main machine
PHPS	Paddle HP sensor		AR-F13
POD1	Machine paper exit sensor 1	Detects discharged paper.	Main machine
POD2	Machine paper exit sensor 2	Detects discharged paper.	Main machine
PPD1	No. 1 paper transport sensor	Detects paper in front of the resist roller.	Main machine
PPD2	PS front sensor	Detects paper in front of PS.	Main machine
PSFM	Power UN cooling fan motor	Cools the power unit.	Main machine
PSHPS	Punch side registration home position		AR-F13
PSM	PS motor	Drives the resist roller and controls ON/OFF.	Main machine
PUNCH	Punch home position		AR-F13
PWMFAN_ICU	Printer controller cooling fan motor	Cools the printer controller.	Main machine
REGS	Resist sensor	Detects that a document has been transported to the resist roller sensor section.	AR-RF3
RJHPS	Alignment HP sensor R		AR-F13
SHPS	Slide HP sensor		AR-F13
SLS	Paper surface sensor		AR-F13
SM	Scanner motor	Drives the scanner unit.	Main machine
SPS	Staple sensor	Detects staple empty.	AR-F13
SS	Staple cartridge sensor	Detects installation of a staple cartridge.	AR-F13
SSS	Stapler safety switch		AR-F13
STHPS	Stapler HP sensor		AR-F13
TCS	Upper cover sensor		AR-F13
TES_C	Toner empty sensor (C)	Detects toner empty (C).	Main machine
TES_K	Toner empty sensor (K)	Detects toner empty (K).	Main machine
TES_M	Toner empty sensor (M)	Detects toner empty (M).	Main machine
TES_Y	Toner empty sensor (Y)	Detects toner empty (Y).	Main machine
TFD2	Paper exit tray full detection	Detects face-down paper exit tray full.	Main machine
TFD2	Face-up paper exit tray full detection	Detects face-up paper exit tray full.	Main machine
THSD	Lower heat roller thermistor	Detects the temperature on the heat roller surface.	Main machine
THSU	Upper heat roller thermistor	Detects the temperature on the heat roller surface.	Main machine
TIMS	Timing sensor	Detects that a document has been transported to the timing sensor section.	AR-RF3
TRC	PS front clutch	Transmits the paper feed motor power to the manual transport roller. (Controls ON/OFF.)	Main machine
ULS	Lift upper limit sensor		AR-F13
VFMP	Exhaust fan motor 1	Exhaust and cools the fusing section.	Main machine
VFMS	Exhaust fan motor 2	Exhaust and cools the fusing section.	Main machine

[14] OTHERS

1. Key operator program

A. Classification of set items

The set items of the key operator program are classified into the following three levels:

* Some items have further lower levels (set menus).

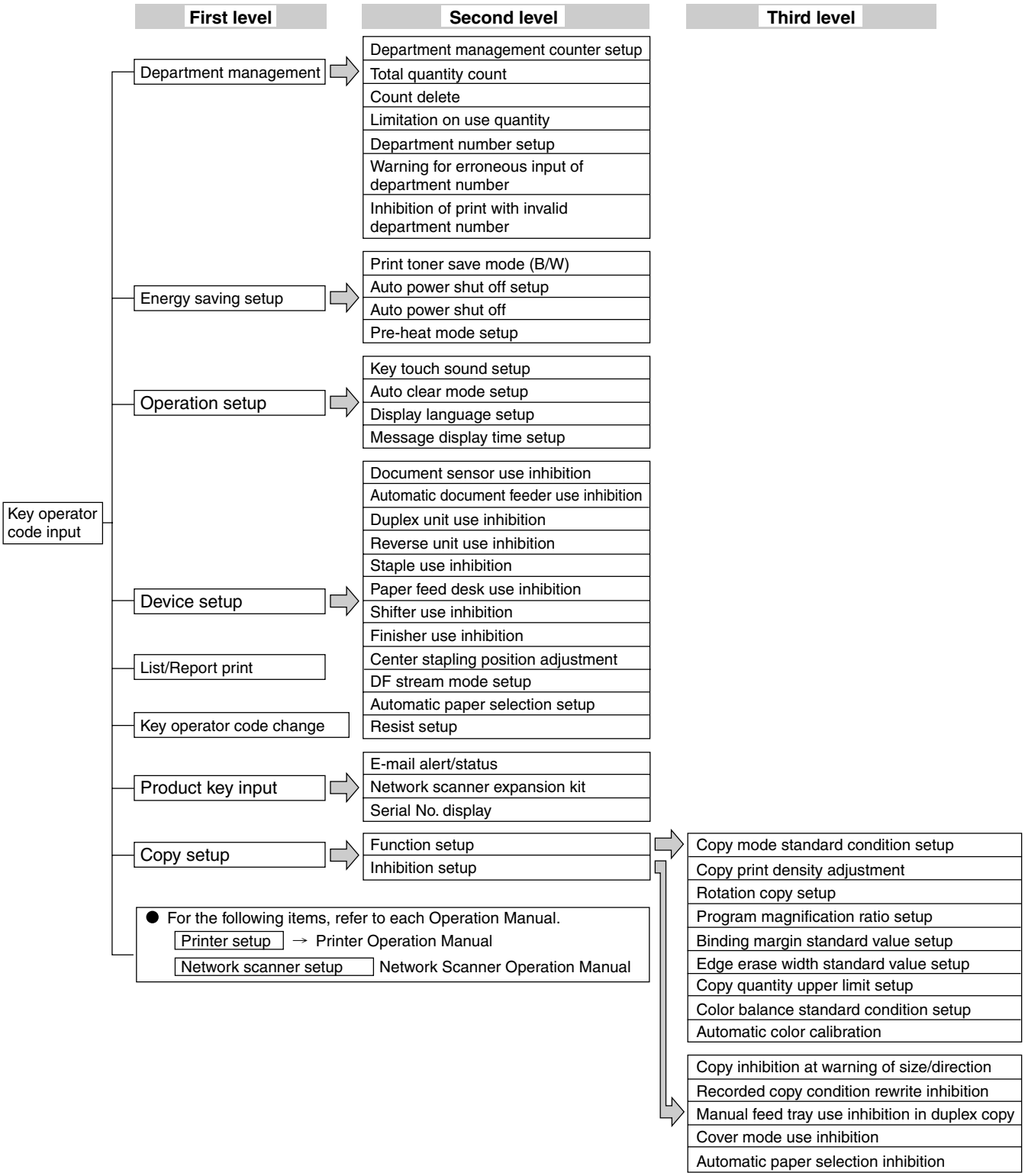

2. Special tools

No	Name	Part code	Purpose	Note
1	SIT chart (CCD gamma adjustment chart)	UKOG-0280FCZZ	Used to correct CCD gamma characteristics.	
2	Service color test chart	UKOG-0283FCZZ	Used to check color copy quality.	
3	Gray scale chart	UKOG-0162FCZZ	Used to check copy density.	
4	Service color test chart for printer	UKOG-0305FCZZ		New
5	Image density sensor adjustment jig	CPLTM6305FC01	Used to adjust the image density sensor. (Plate with calibration sheet)	New
		TLABZ4843FCZZ	Calibration sheet	New (for replacement)
6	Extension cable for measure high voltage	DHAi-3471FCZZ	Used to check the MC grid and DV bias voltage (Color)	New
7		DHAi-3472FCZZ	Used to check the MC grid and DV bias voltage (Black)	New
8	Starting powder	UKOG-0123FCZZ	Used to reduce friction between the transfer belt and the transfer belt cleaning blade.	
9	Cleaning cloth	UKOG-0289FCZZ	Used to clean the optical system. Wash to reuse.	
10	Level converter	UKOG-0002QSZZ (with serial cable)	Used to download the FLASH ROM program from a PC to the FLASH ROM on the machine.	Commercially available serial cable can be used.
		UKOG-0003QSZZ (without serial cable)		
11	FLASH ROM download program file	Mainte_xxxx.exe	Download (upgrade) the FLASH ROM program for main body section	
12		WDskxxx_d.pgm	Download (upgrade) the FLASH ROM program for Desk unit	
13	Spare FLASH ROM		FLASH ROM (16Mbit x 2) 1pc	The type (capacity) of Flash ROM is determined depending on the kind of Flash ROM (in the PCU PWB, in the ICU PWB, Printer control PWB or in the operation control PWB).
14			FLASH ROM (16Mbit) 1pc	
15			FLASH ROM (8Mbit) 2pcs	
16			FLASH ROM (32Mbit x 2) 2pcs	
17	Magnifying glass		Picture quality check (Mainly the color registration is checked.)	Purchase a commercially available one. (Magnification ratio:20 - 25)

Memo

Memo

Memo

CAUTION FOR BATTERY REPLACEMENT

(Danish) ADVARSEL !
Lithiumbatteri – Eksplosionsfare ved fejlagtig håndtering.
Udskiftning må kun ske med batteri
af samme fabrikat og type.
Levér det brugte batteri tilbage til leverandoren.

(English) Caution !
Danger of explosion if battery is incorrectly replaced.
Replace only with the same or equivalent type
recommended by the manufacturer.
Dispose of used batteries according to manufacturer's instructions.

(Finnish) VAROITUS
Paristo voi räjähtää, jos se on virheellisesti asennettu.
Vaihda paristo ainoastaan laitevalmistajan suosittelemaan
tyyppiin. Hävitä käytetty paristo valmistajan ohjeiden
mukaisesti.

(French) ATTENTION
Il y a danger d'explosion s' il y a remplacement incorrect
de la batterie. Remplacer uniquement avec une batterie du
même type ou d'un type équivalent recommandé par
le constructeur.
Mettre au rebut les batteries usagées conformément aux
instructions du fabricant.

(Swedish) VARNING
Explosionsfara vid felaktigt batteribyte.
Använd samma batterityp eller en ekvivalent
typ som rekommenderas av apparattillverkaren.
Kassera använt batteri enligt fabrikantens
instruktion.

(German) Achtung
Explosionsgefahr bei Verwendung inkorrekter Batterien.
Als Ersatzbatterien dürfen nur Batterien vom gleichen Typ oder
vom Hersteller empfohlene Batterien verwendet werden.
Entsorgung der gebrauchten Batterien nur nach den vom
Hersteller angegebenen Anweisungen.

CAUTION FOR BATTERY DISPOSAL

(For USA, CANADA)

Contains lithium-ion battery. Must be disposed of properly.
Remove the battery from the product and contact
federal or state environmental
agencies for information on recycling and disposal options.

SHARP®

COPYRIGHT © 2003 BY SHARP CORPORATION

All rights reserved.
Printed in Japan.
No part of this publication may be reproduced,
stored in a retrieval system, or transmitted,
in any form or by any means,
electronic; mechanical; photocopying; recording or otherwise
without prior written permission of the publisher.

Trademark Acknowledgments

Microsoft Windows, MS-DOS, Windows NT, Windows 2000 are trademarks of Microsoft Corporation in the U. S. A. and other countries.

Macintosh, Power Macintosh, Mac OS, LaserWriter, and AppleTalk are registered trademarks of Apple Computer, Inc.

IBM, PC/ AT, and PowerPC are trademarks of International Business Machines Corporation.

Pentium is a registered trademark of Intel Corporation.

PCL is a trademark of the Hewlett- Packard Company.

PostScript® is a registered trademark of Adobe Systems Incorporated.

NetWare is a registered trademark of Novell, Inc.

All other trademarks and copyrights are the property of their respective owners.

SHARP CORPORATION
Digital Document System Group
Products Quality Assurance Department
Yamatokoriyama, Nara 639-1186, Japan
2003 March Printed in Japan

SHARP CIRCUIT DIAGRAM

CODE: 00ZARC260/C1/

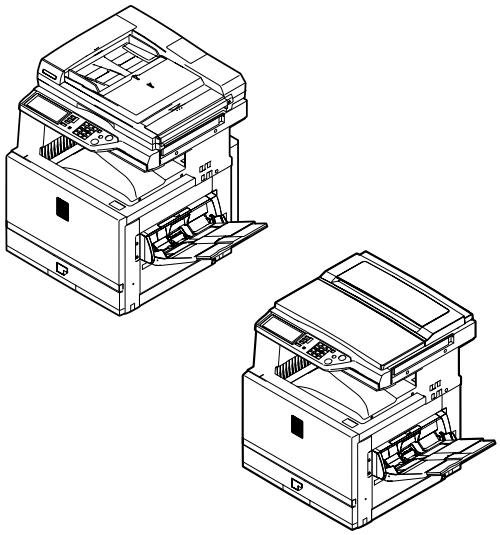

DIGITAL FULL COLOR COPIER

デジタルフルカラー複合機

MODEL AR-C260

CONTENTS

[1] BLOCK DIAGRAM 1-1
[2] PWB LOCATION CHART. 2-1
[3] ACTUAL WIRING CHART 3-1
[4] CIRCUIT DIAGRAM AND PARTS LAYOUT . . . 4-1
A. PCU PWB 4-1
B. ICU PWB. 4-21
C. MFPC2 PWB. 4-69
D. SCANNER I/F PWB 4-101
E. OPE KEY PWB 4-107
F. PROCESS CONTROL PWB. 4-111
G. LED-DL PWB 4-113
H. LVDS/INV PWB. 4-115
I. DRIVER PWB 4-118
J. HDD PWB 4-123
K. PRINT CONTROL PWB 4-130
L. MDMC PWB 4-179
M. TEL/LIU PWB (JAPAN). 4-207
N. POWER SUPPLY PWB 4-213

[1] ブロックダイアグラム 1-1
[2] 基板（PWB）ローケーション 2-1
[3] 実体配線図 3-1
[4] 回路図と部品配置図 4-1
A. PCU PWB. 4-1
B. ICU PWB. 4-21
C. MFPC2 PWB 4-69
D. スキャナ IF PWB 4-101
E. オペキー PWB. 4-107
F. プロセスコントロール PWB 4-111
G. LED-DL PWB. 4-113
H. LVDS/INV PWB. 4-115
I. ドライバー PWB 4-118
J. HDD PWB 4-123
K. プリンタコントローラ PWB 4-130
L. MDMC PWB 4-179
M. TEL LIU (JAPAN) 4-207
N. 電源回路 4-213

Parts marked with "⚠" are important for maintaining the safety of the set. Be sure to replace these parts with specified ones for maintaining the safety and performance of the set.

安全性・信頼性確保のため部品は、必ず正規のものをご使用下さい。
⚠印の商品は、安全上重要な部品です。交換をする時は、安全および性能維持のため必ず指定の部品をご使用下さい。

SHARP CORPORATION

This document has been published to be used for after sales service only.
The contents are subject to change without notice.

[1] BLOCK DIAGRAM / ブロックダイアグラム

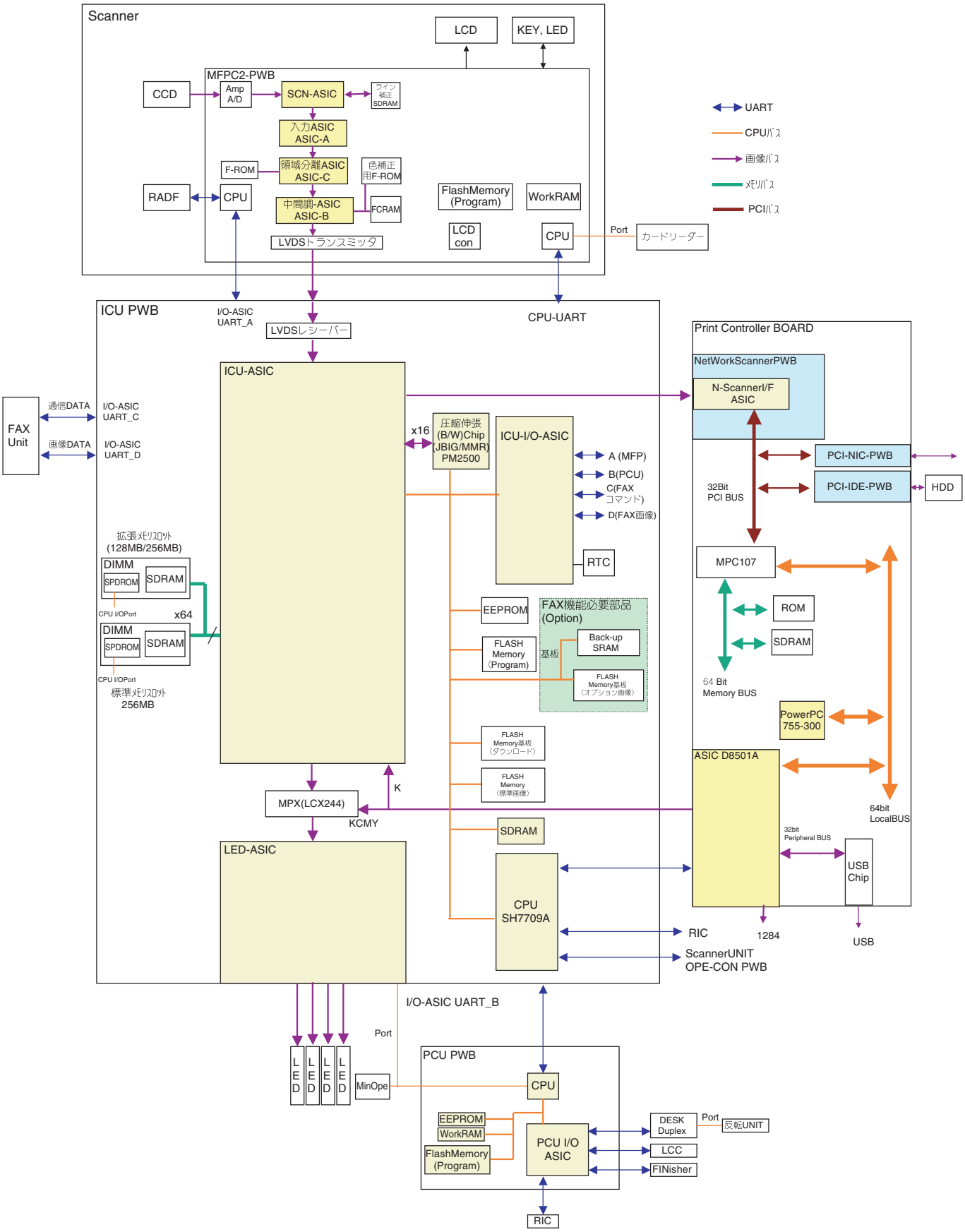

[2] PWB LOCATION CHART / 基板（PWB）ロケーション

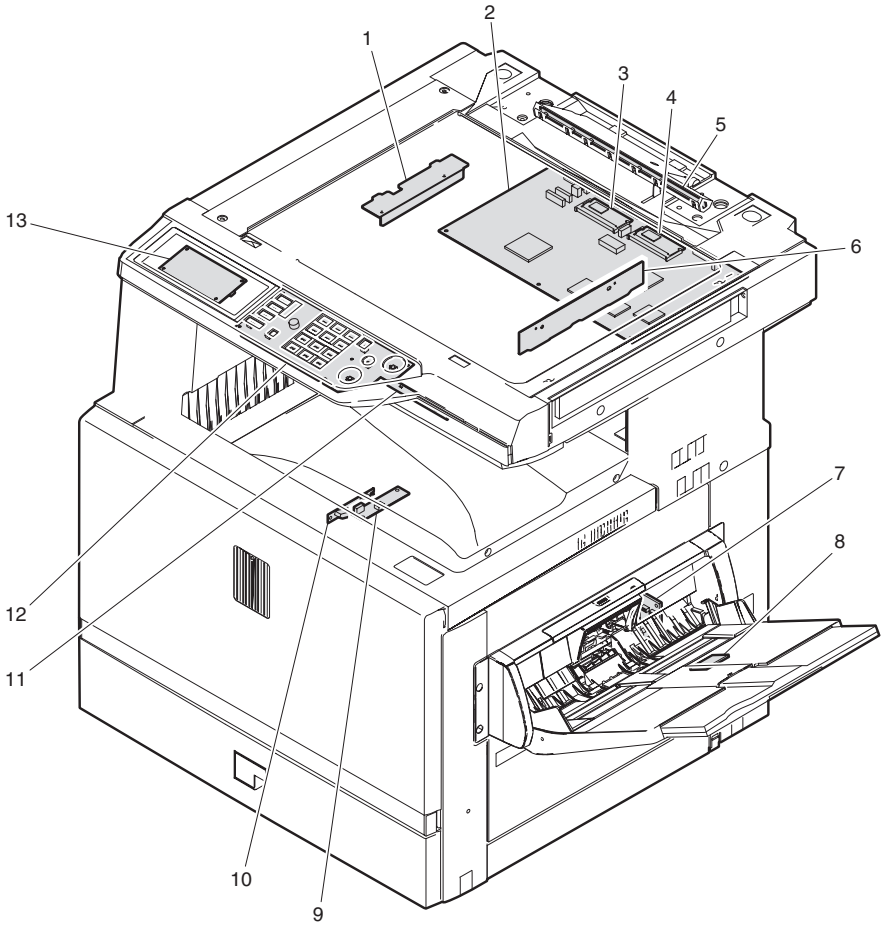

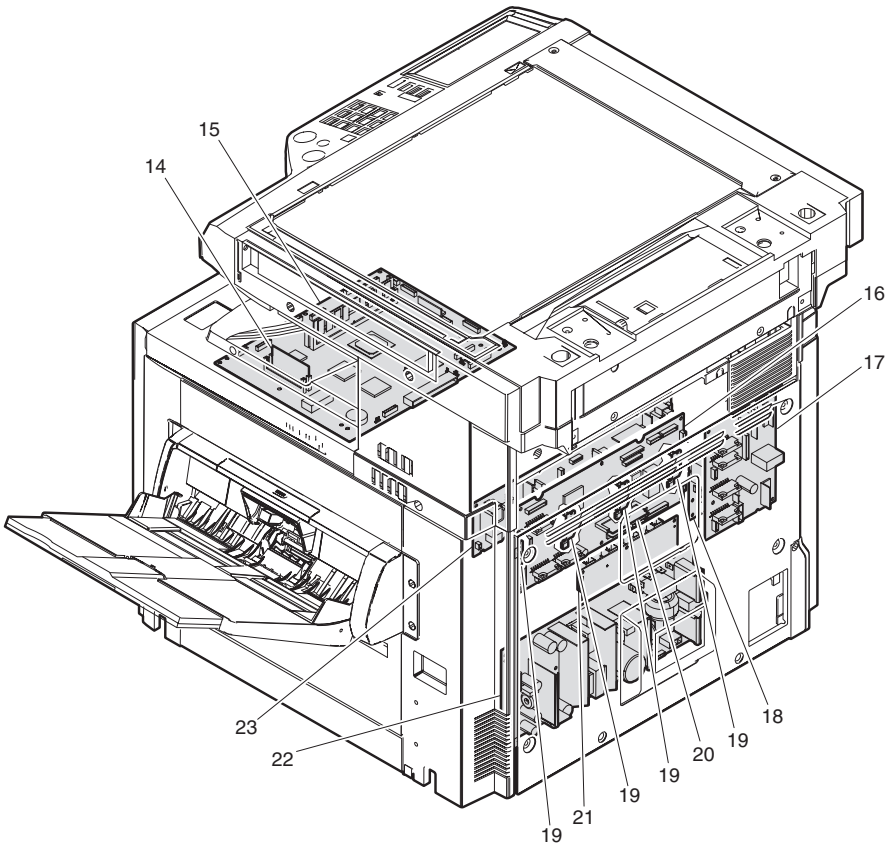

No.	パーツ		略称・信号名	タイプ
	名　　称	機　能・動　作		
1	CL インバータ基板	キセノンランプを駆動する		
2	MFP 基板	CCD から出力されたイメージの各種補正、操作パネルのコントロール		
3	フラッシュ基板 (OP)	OP 基板を動作させるプログラムが入った基板		
4	フラッシュ基板 (MFP)	MFP 基板を動作させるプログラムが入った基板		
5	原稿検知発光基板	原稿サイズ検知 LED の発光		
6	CCD 基板	原稿イメージを電気信号に変換する		
7	リフト UP 基板	カセットサイズ検知、カセットリフトアップモータ信号中継		
8	手差し VR 基板	手差し幅信号出力		
9	プロコン基板 (モノクロ用)	転写ベルト上のモノクロトナー濃度を出力		
10	プロコン基板 (カラー用)	転写ベルト上のカラートナー濃度を出力		
11	原稿検知受光基板	原稿サイズ検知信号出力		
12	操作基板	キー操作信号を出力する		
13	INV/LVDS 基板	MFP 基板からの LCD、タッチパネル信号の中継、LCD バックライトの駆動		
14	フラッシュ基板 (ICU)	ICU 基板を動作させるプログラムが入った基板		
15	ICU 基板	画像処理、LED ヘッドのコントロール		
16	PCU 基板	エンジンセクションをコントロールする		
17	DRIVER 基板	DC 負荷電源の制御、モータ駆動		
18	AC 電源基板	１次側の電源コントロール		
19	LED DL 基板	感光体上の電荷を除電する		
20	フラッシュ基板 (PCU)	PCU 基板を動作させるプログラムが入った基板		
21	高圧 TC 基板	転写電圧を発生する		
22	DC 電源基板	２次側の電圧出力、HL コントロール		
23	高圧 MC 基板	メインチャージャー用高圧と現像バイアス電圧を発生する		

英文リスト

Ⓟ

[3] ACTUAL WIRING CHART / 実体配線図

(1) AC CIRCUIT SECTION (JAPAN) / AC回路部(JAPAN)

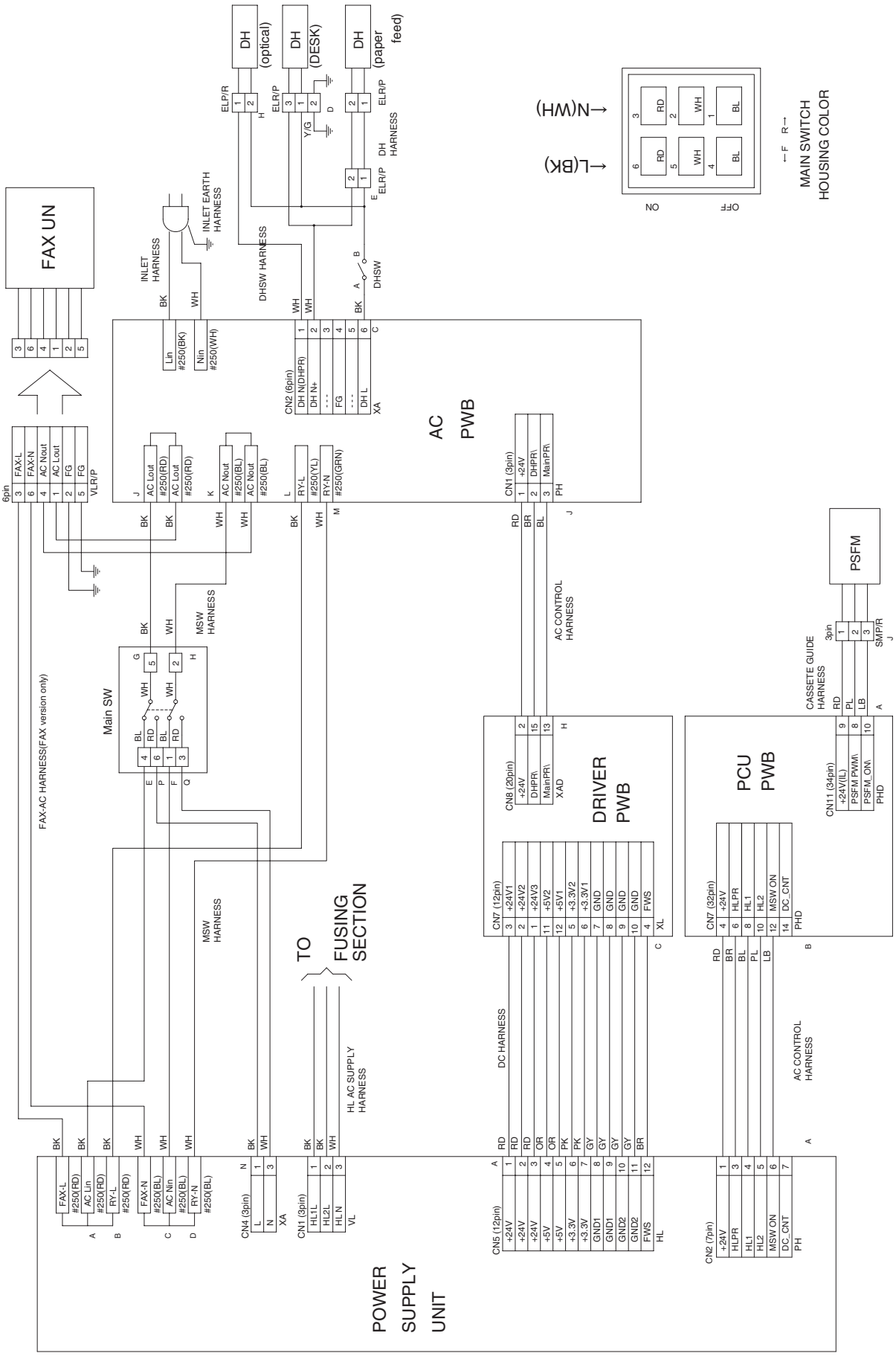

(1) AC CIRCUIT SECTION (EX100) / AC回路部 (EX100)

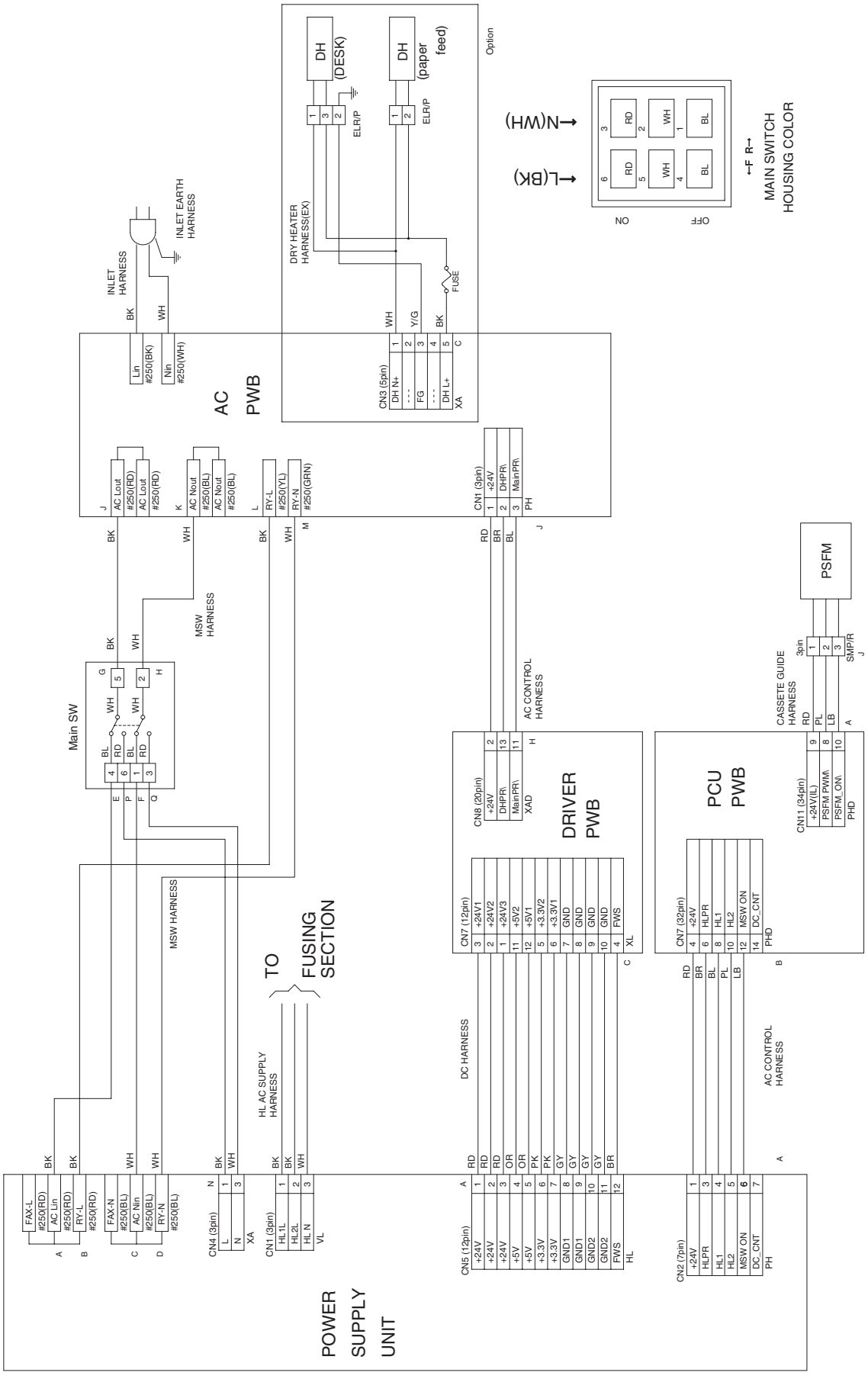

(1) AC CIRCUIT SECTION (EX200) / AC回路部(EX200)

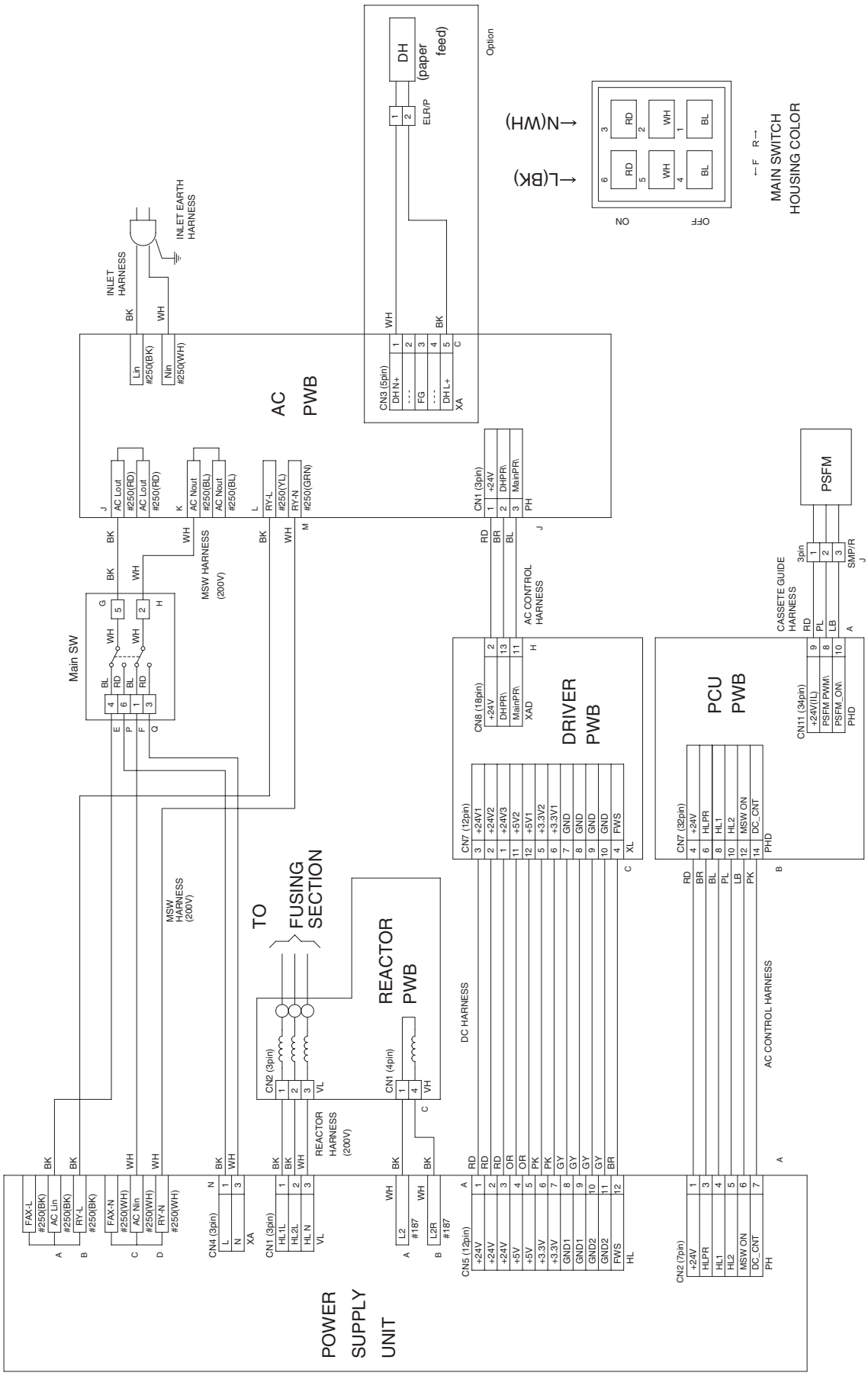

(2) DRUM DRIVE/DSW SECTION / ドラムドライブ/DSW部

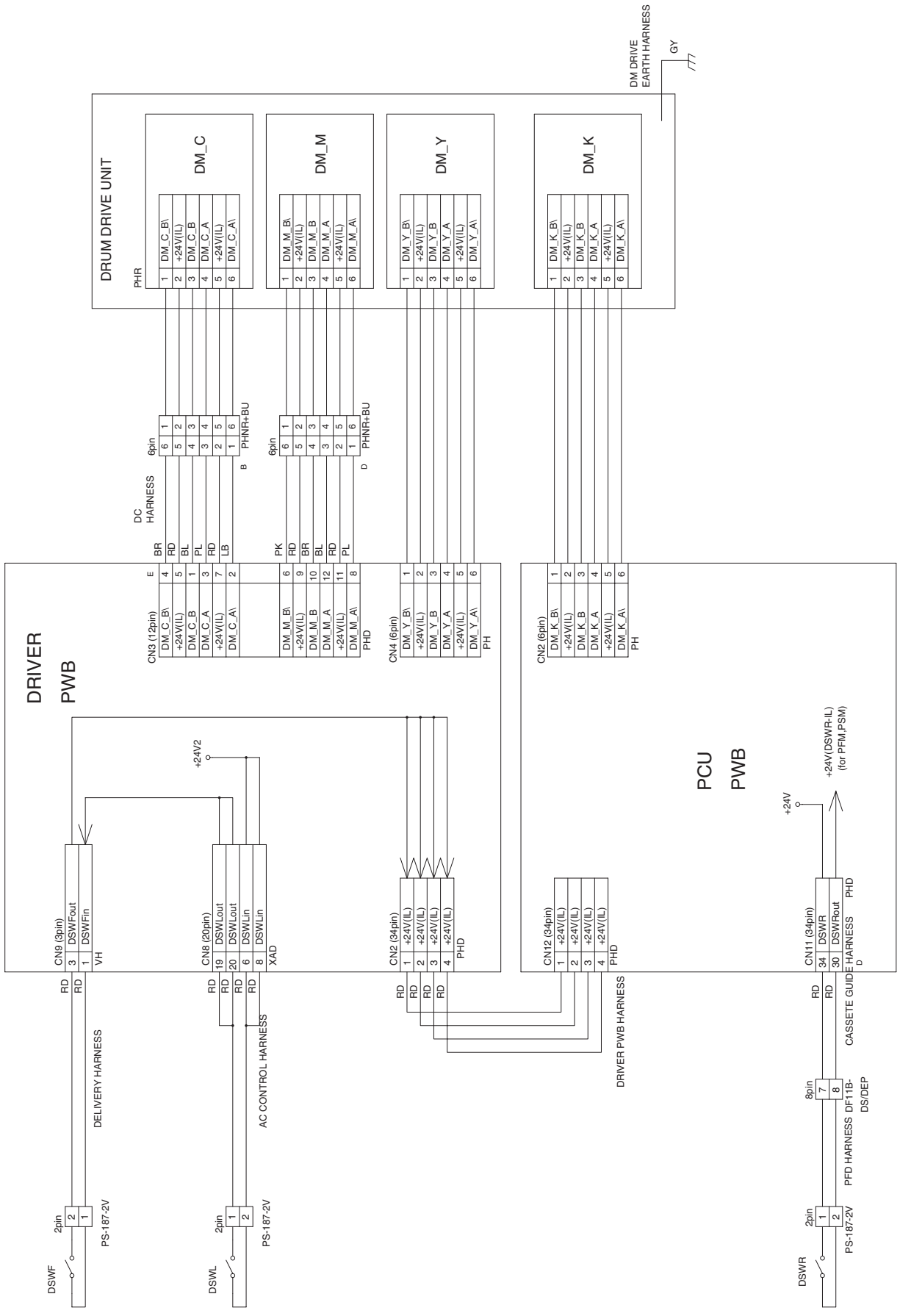

(3) PROCESS SECTION / プロセス部

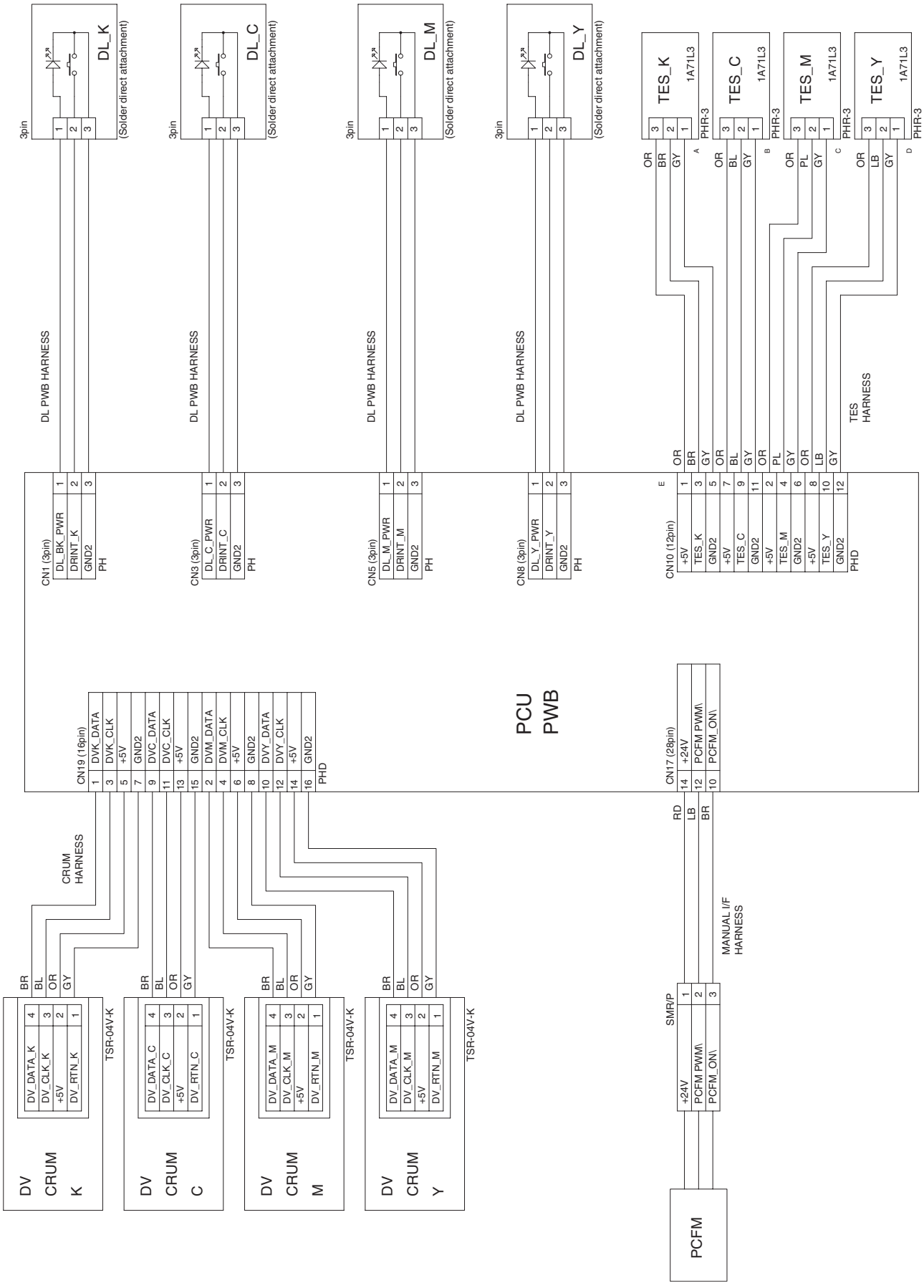

(4) HIGH VOLTAGE UNIT / 高圧ユニット

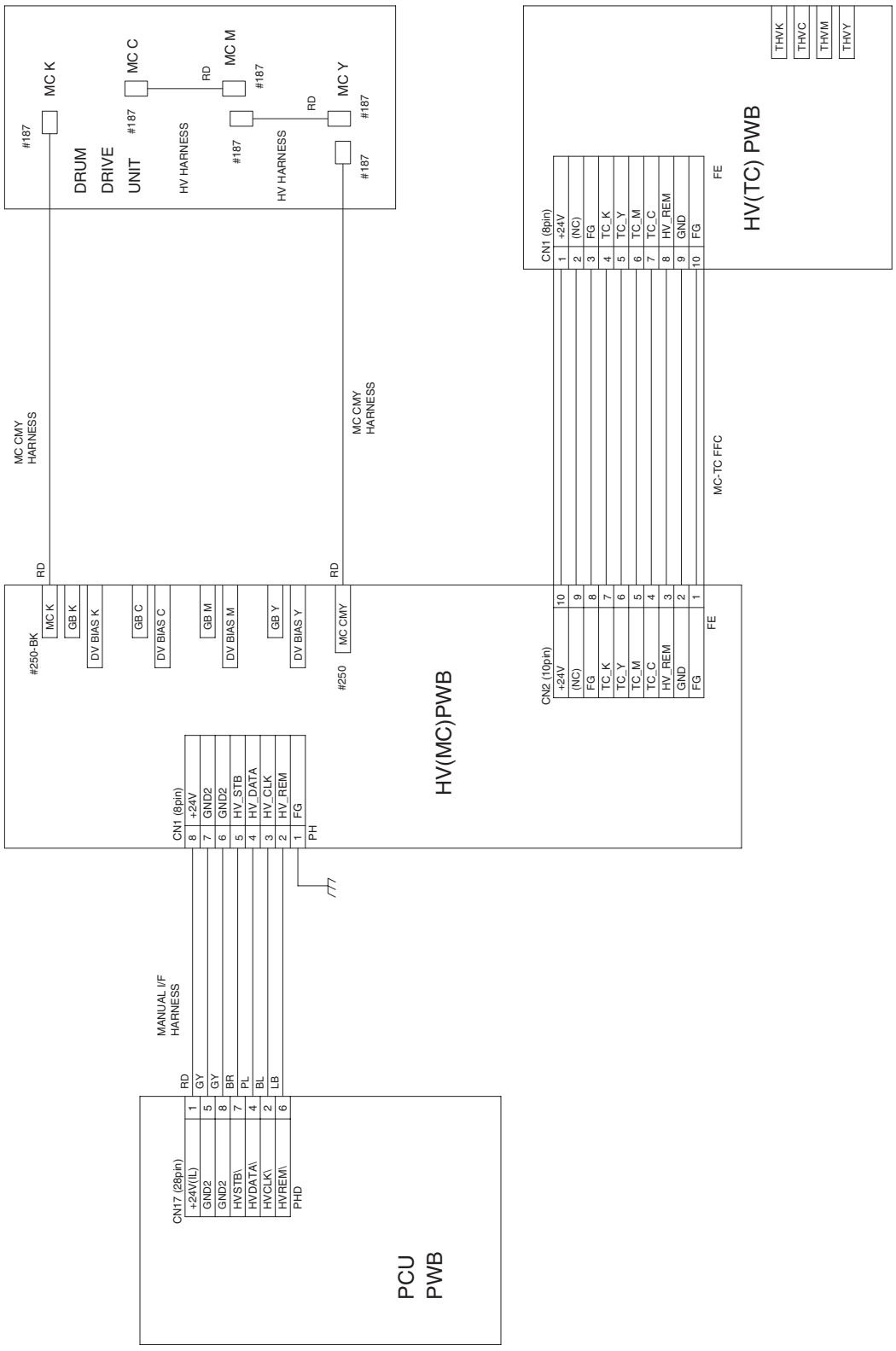

(5) PCU-DRIVER SECTION / PCUドライバ部

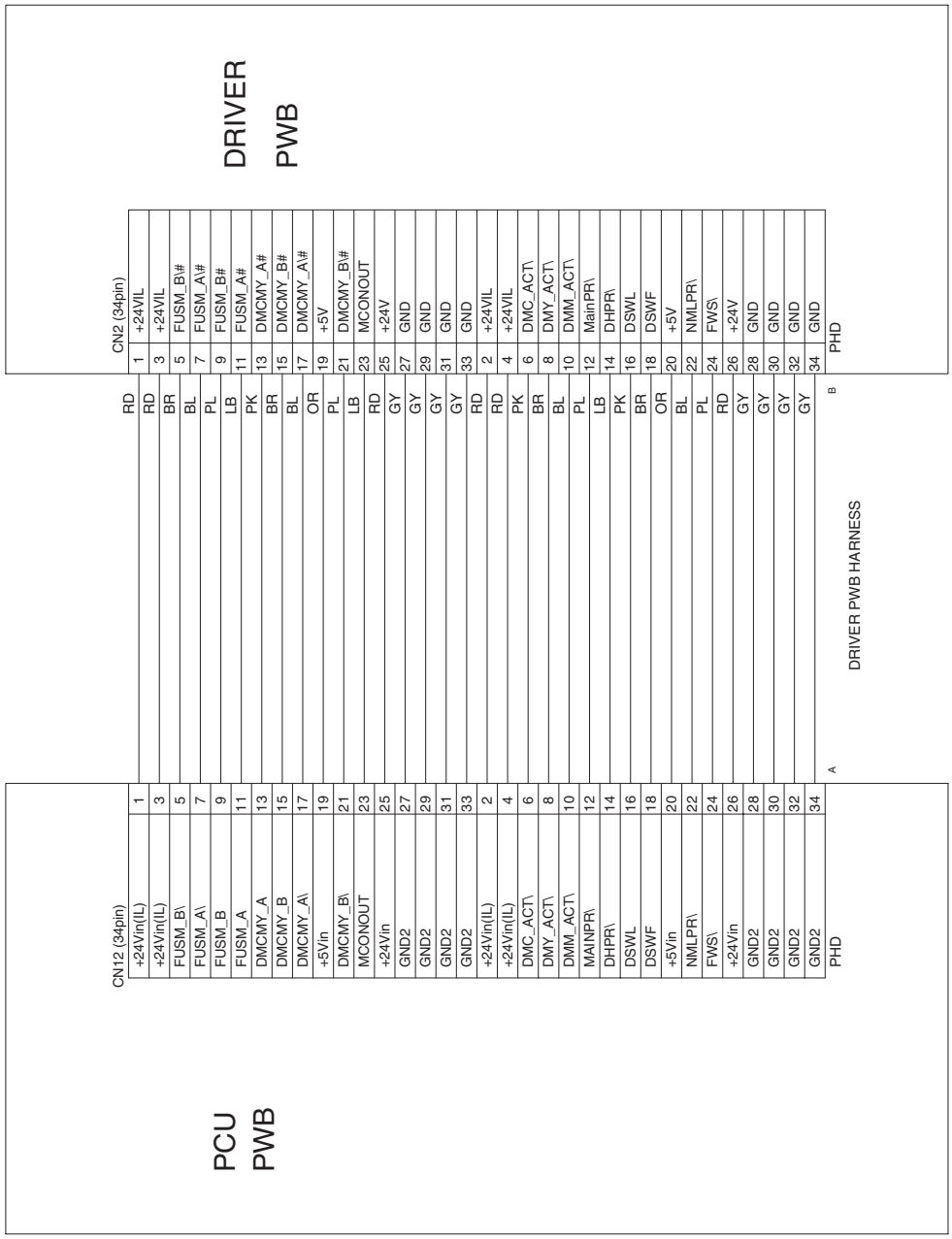

(6) PCU-ICU / MINI-OPE SECTION / PCU-ICU / ミニオペ部

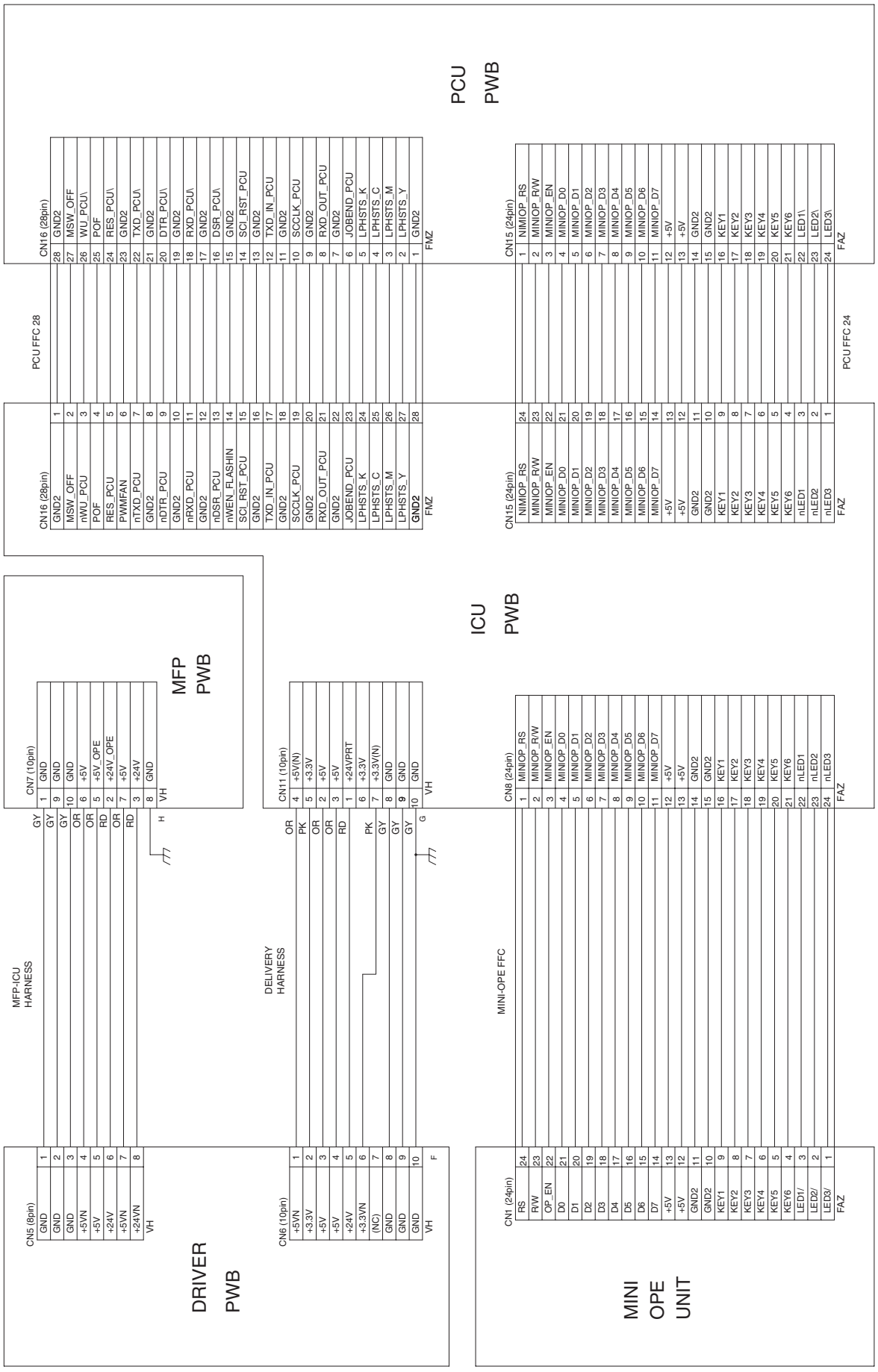

(7) TRANSPORT SECTION / 搬送部

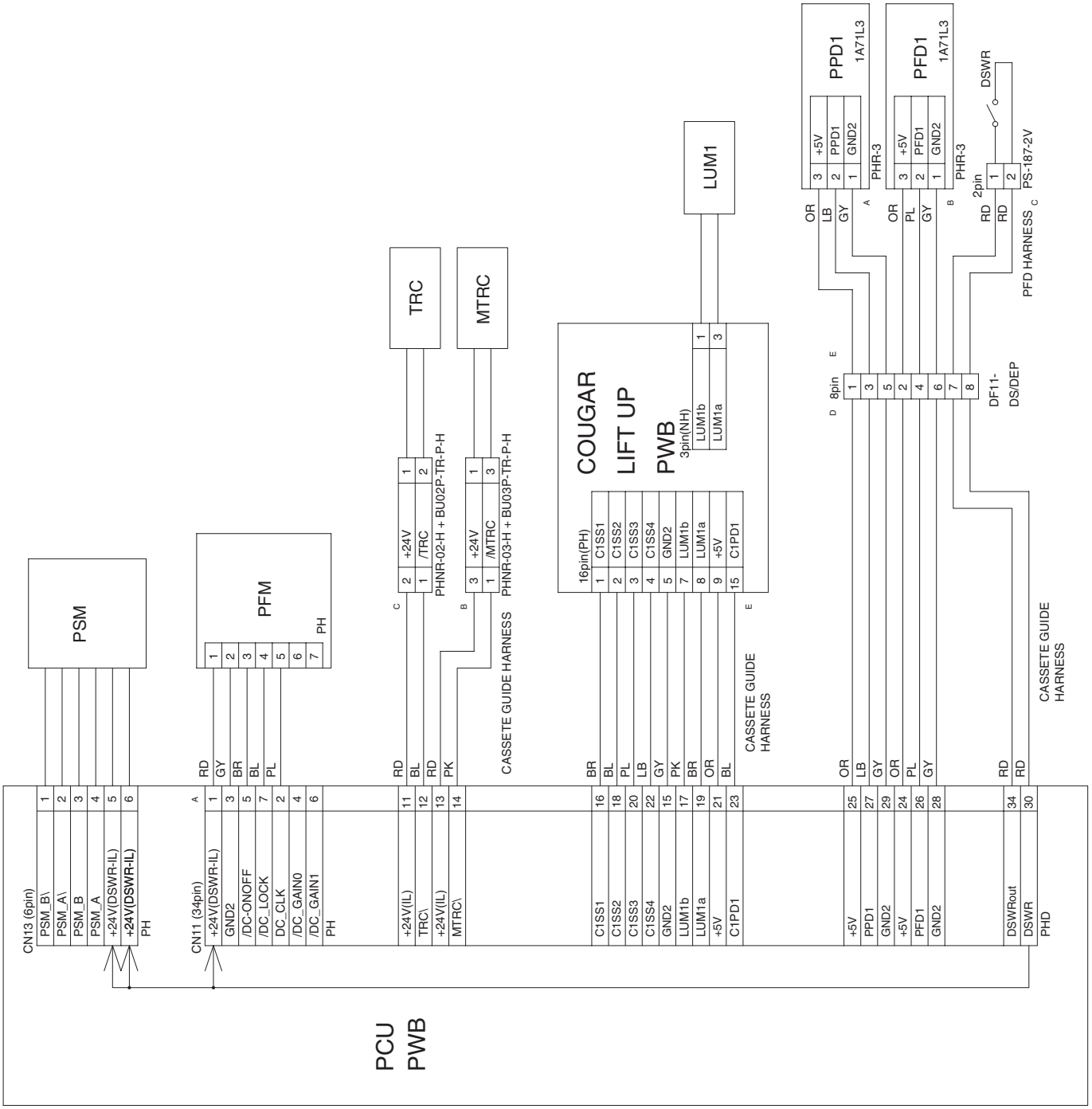

(8) TRANSPORT BELT UNIT / 搬送ベルトユニット

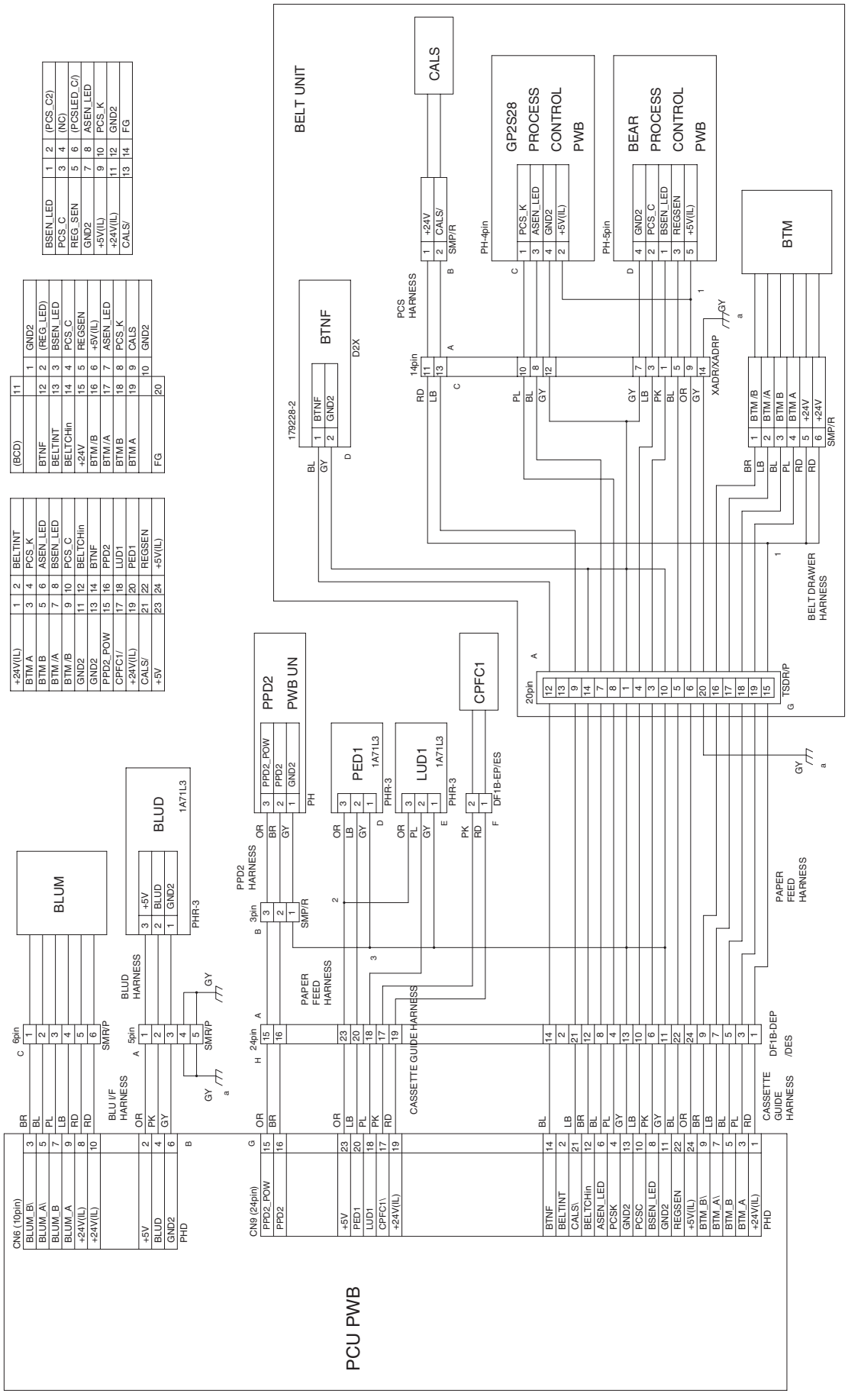

(9) FUSING UNIT (100V) / 定着ユニット(100V)

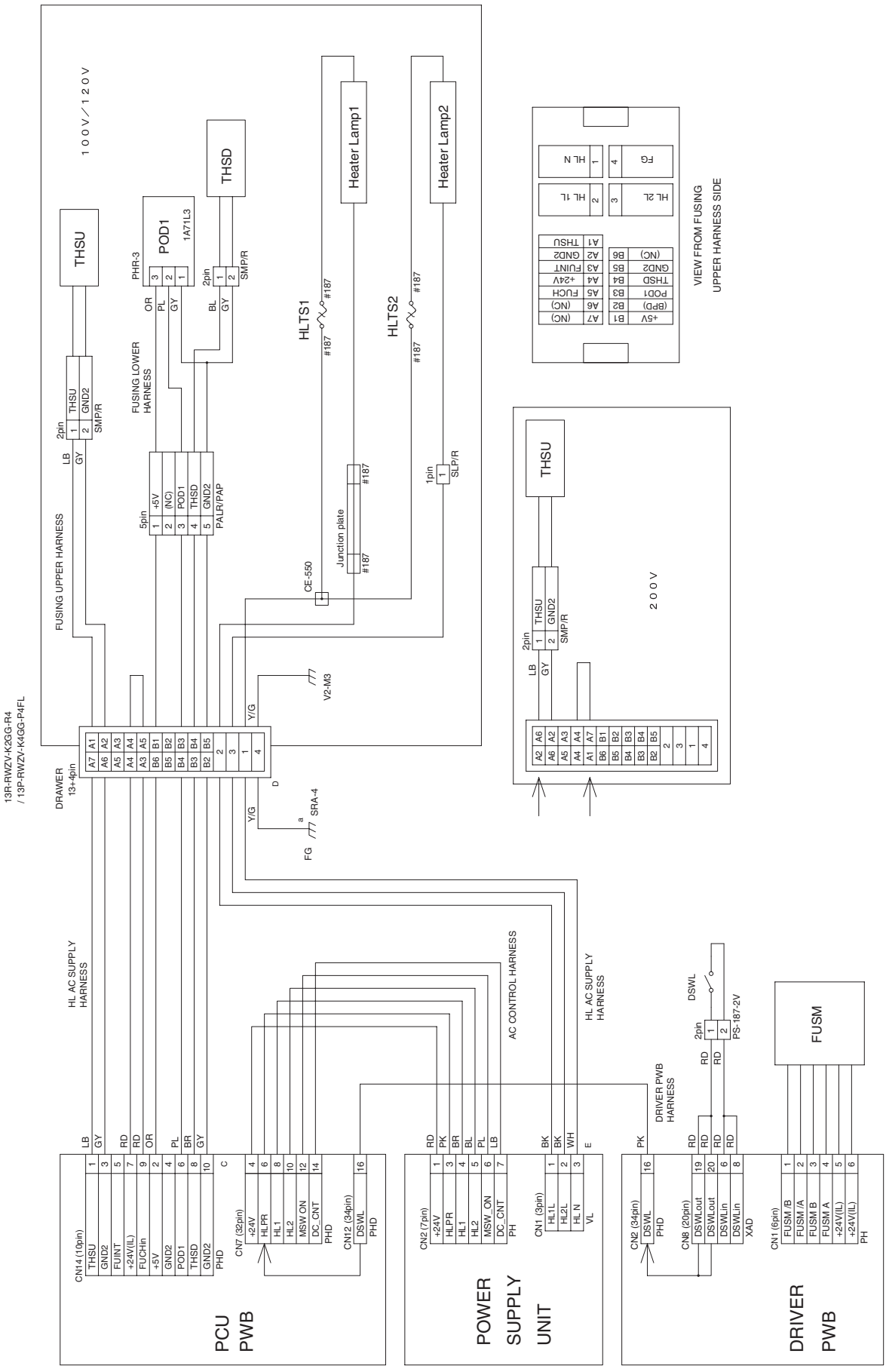

(9) FUSING UNIT (200V) / 定着ユニット(200V)

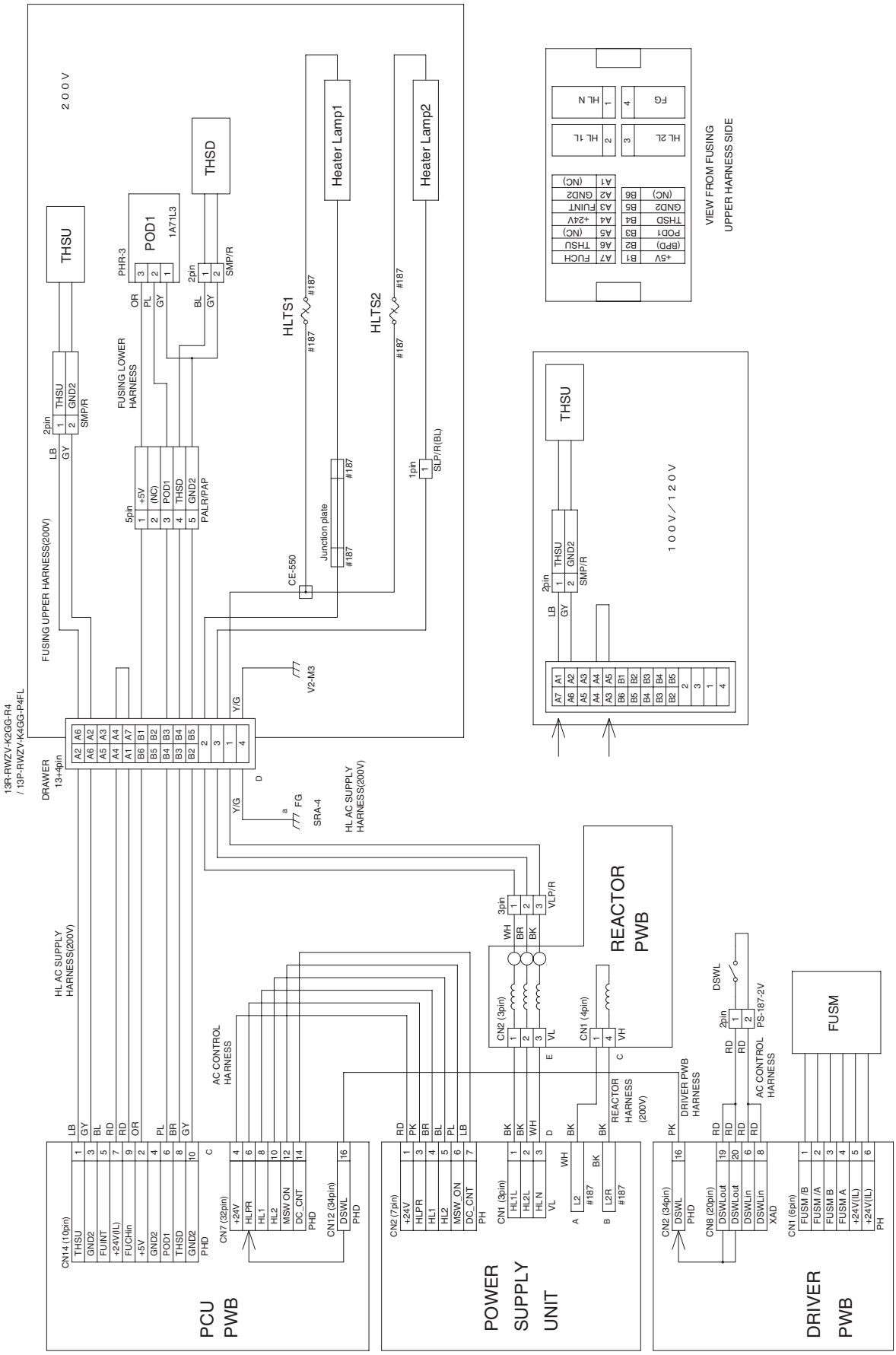

(10) DELIVERY SECTION / デリバリー部

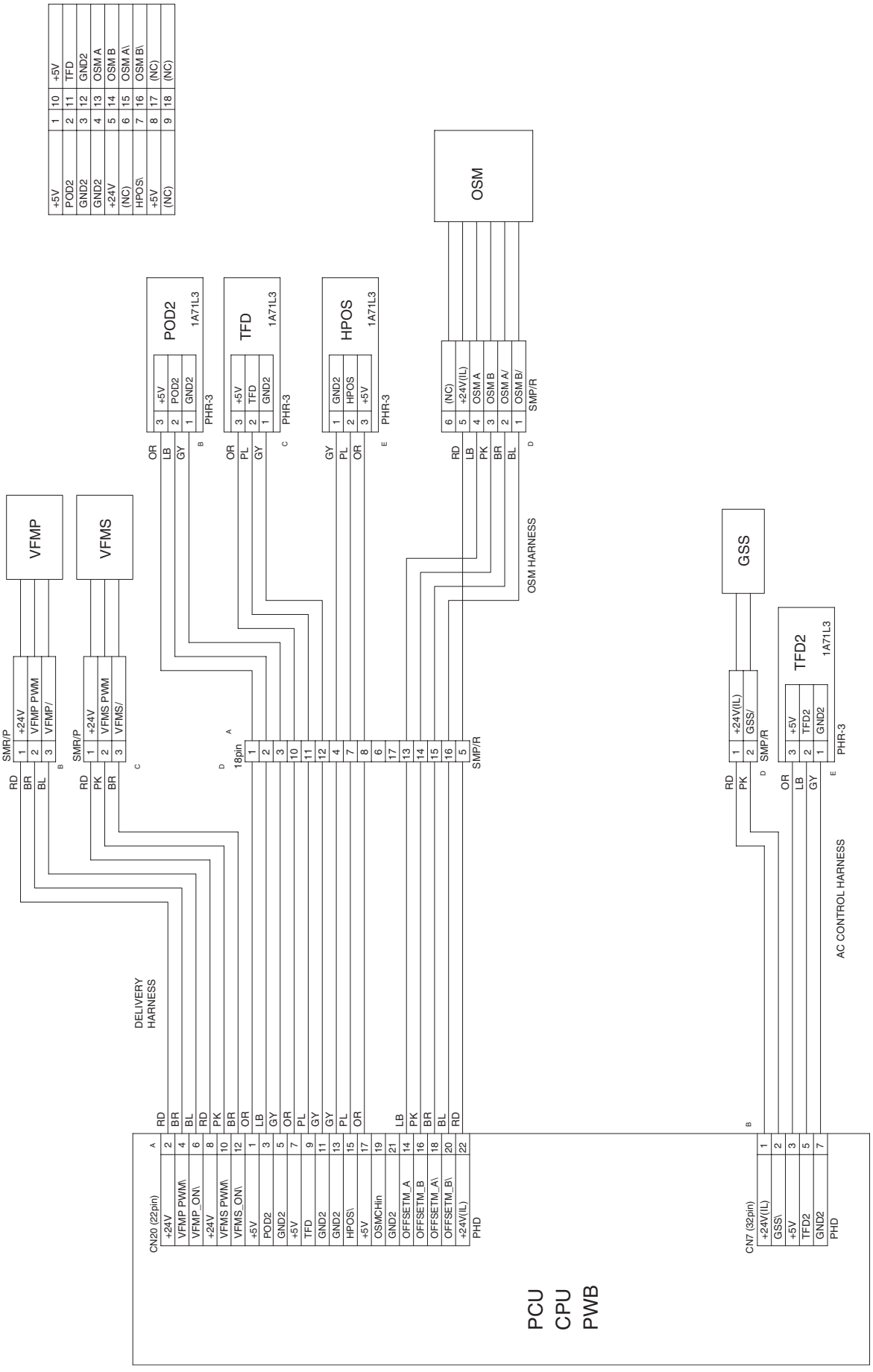

(11) MANUAL PAPER FEEDING / 手差し給紙部

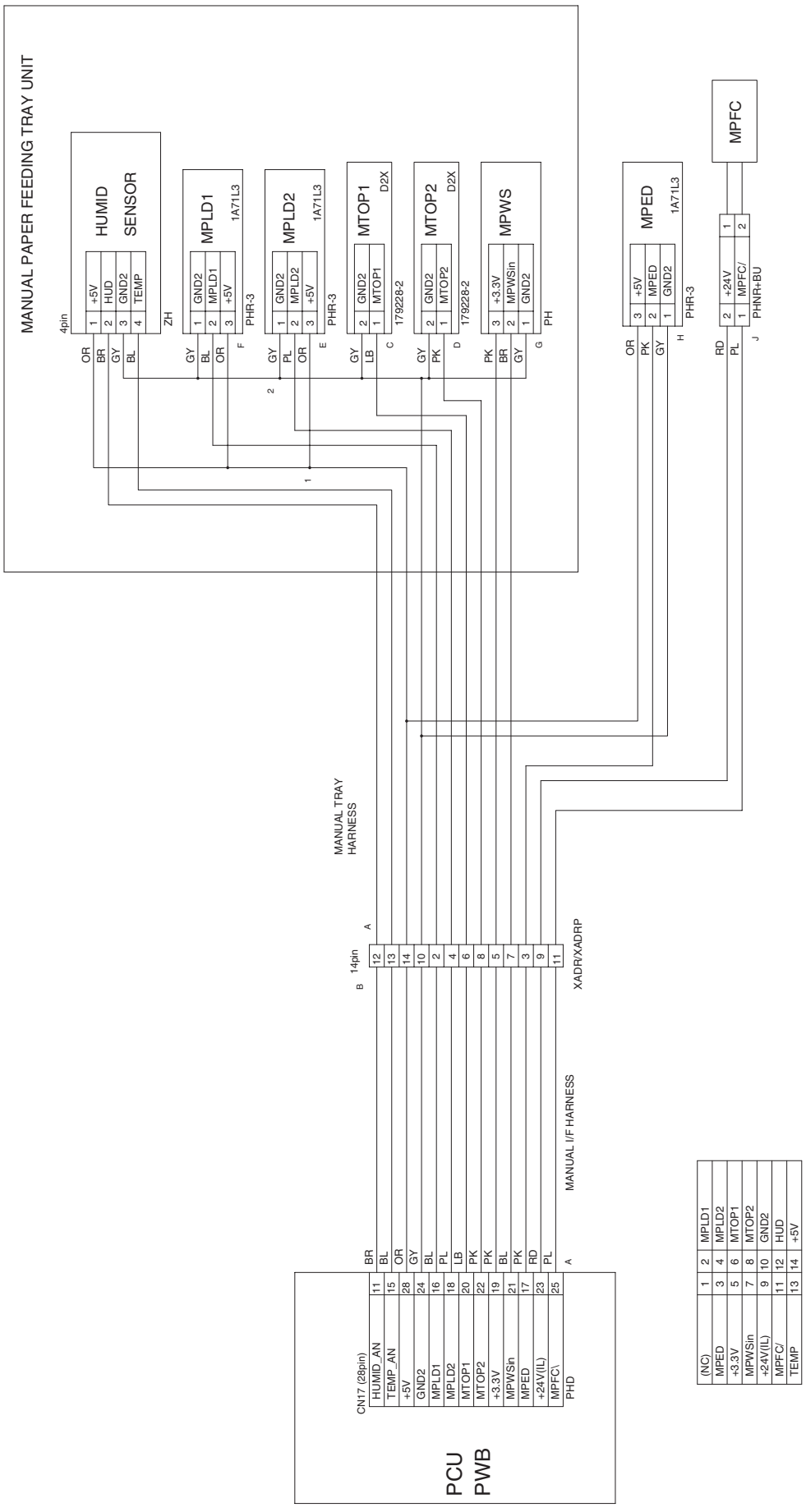

(12) LED-HEAD SECTION / LEDヘッド部

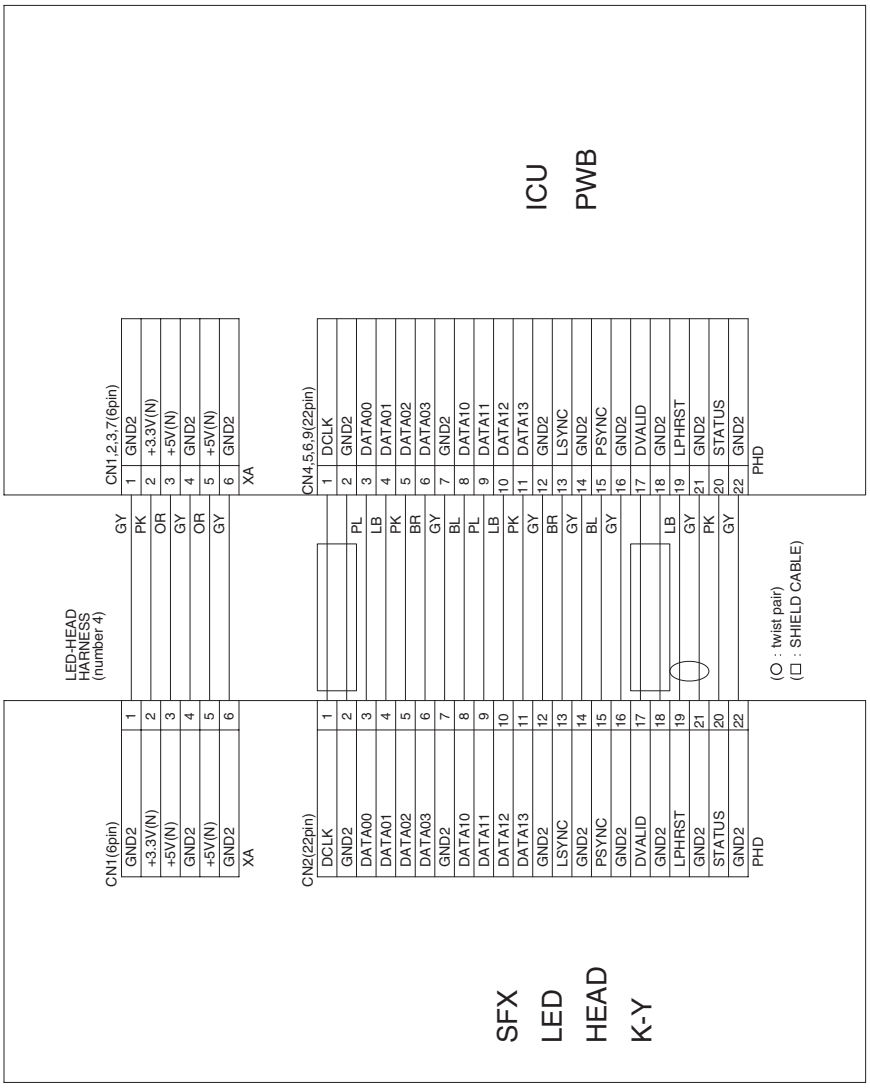

(13) OPTION UNIT / オプションユニット

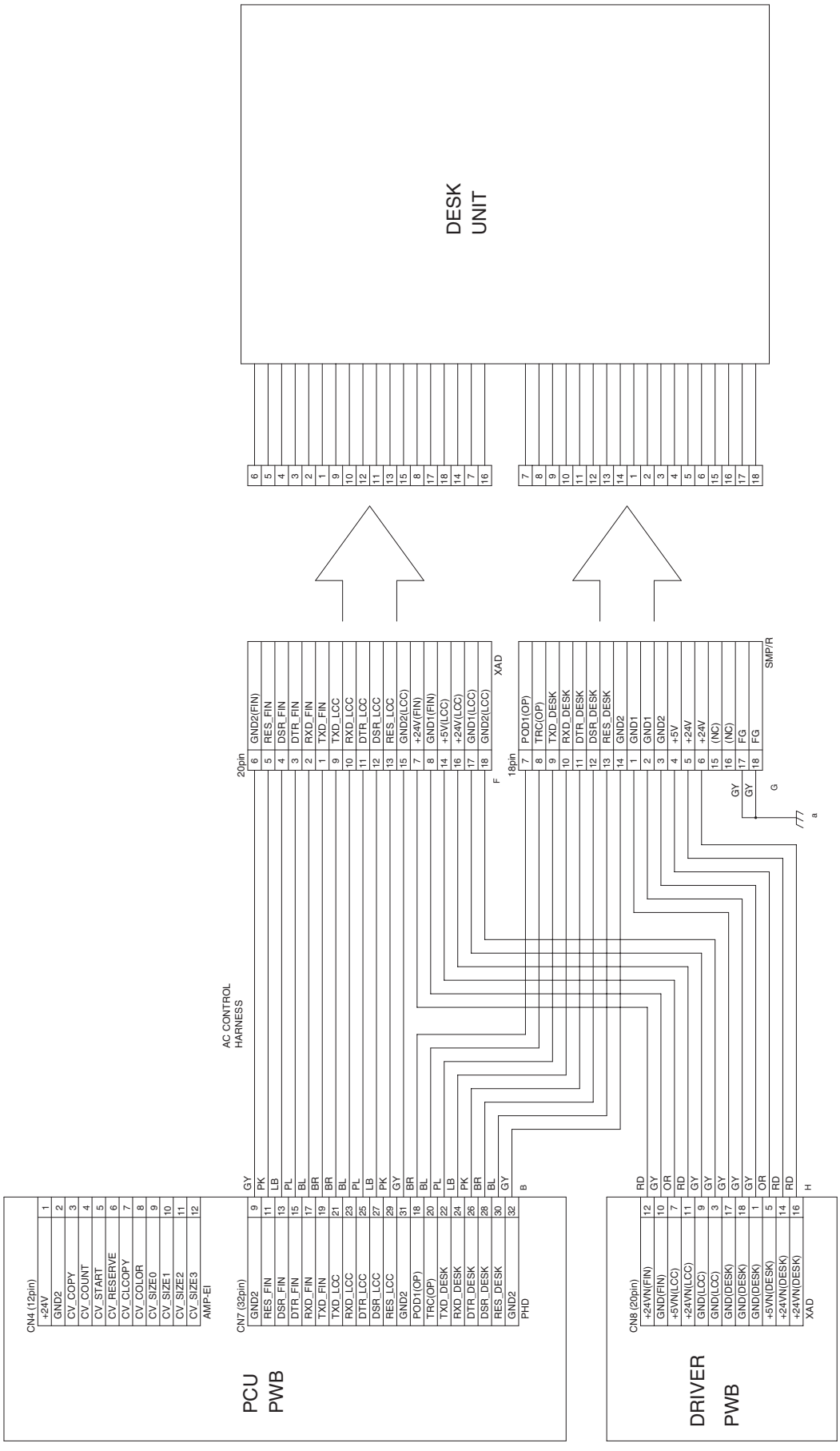

(14) MFP SECTION / MFP部

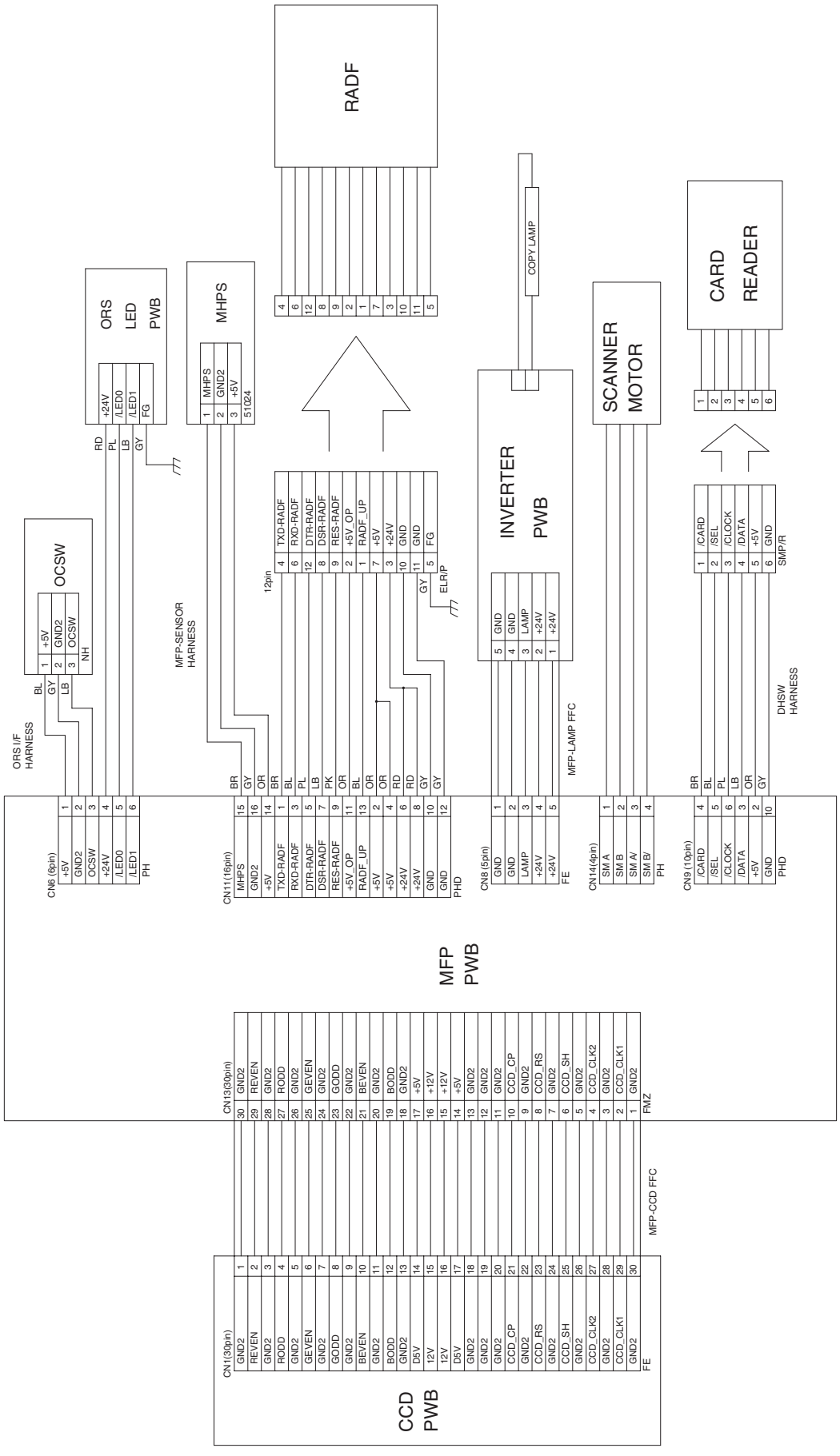

(15) OPERATION UNIT / オペレーションユニット

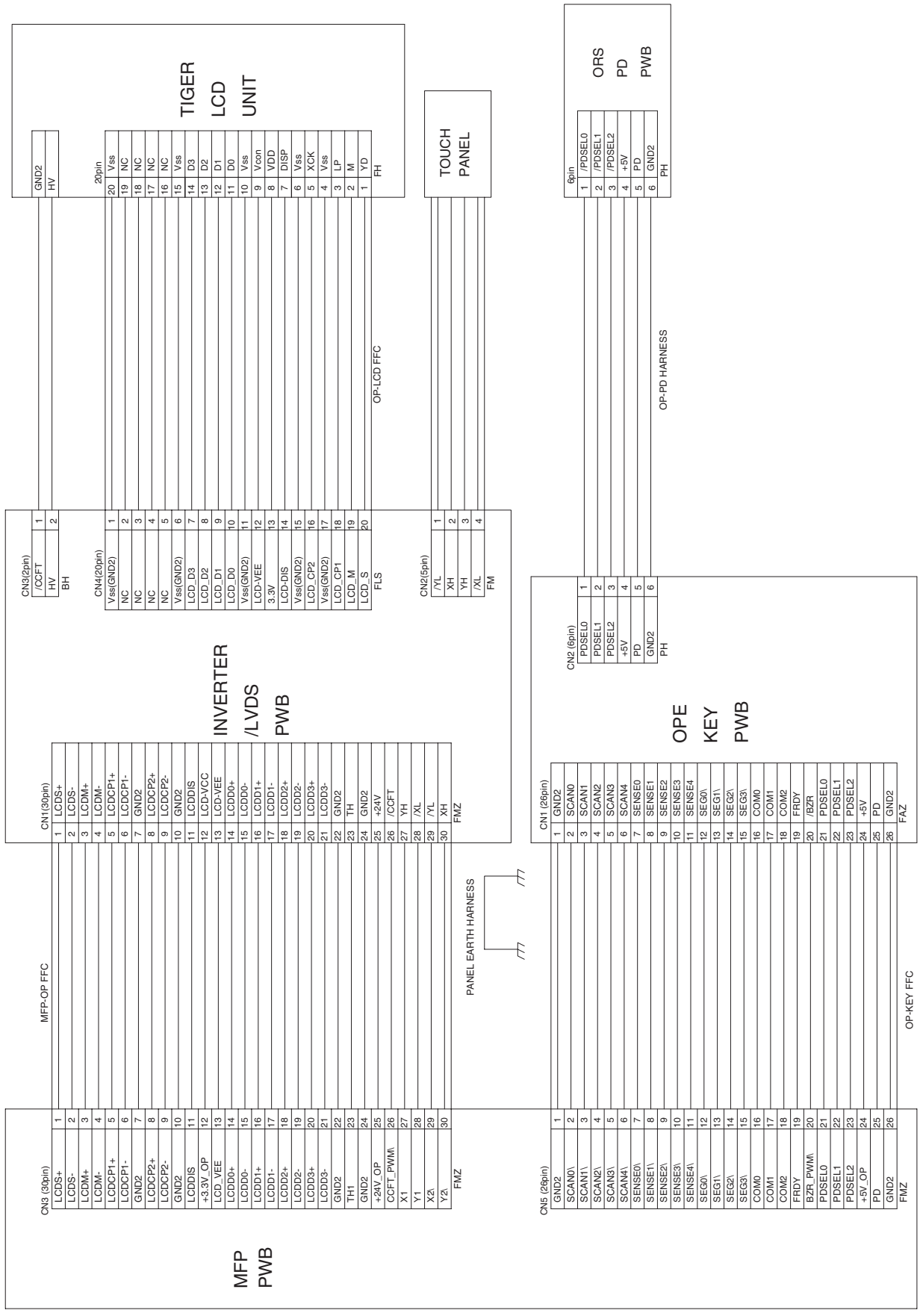

(16) ICU SECTION / ICU部

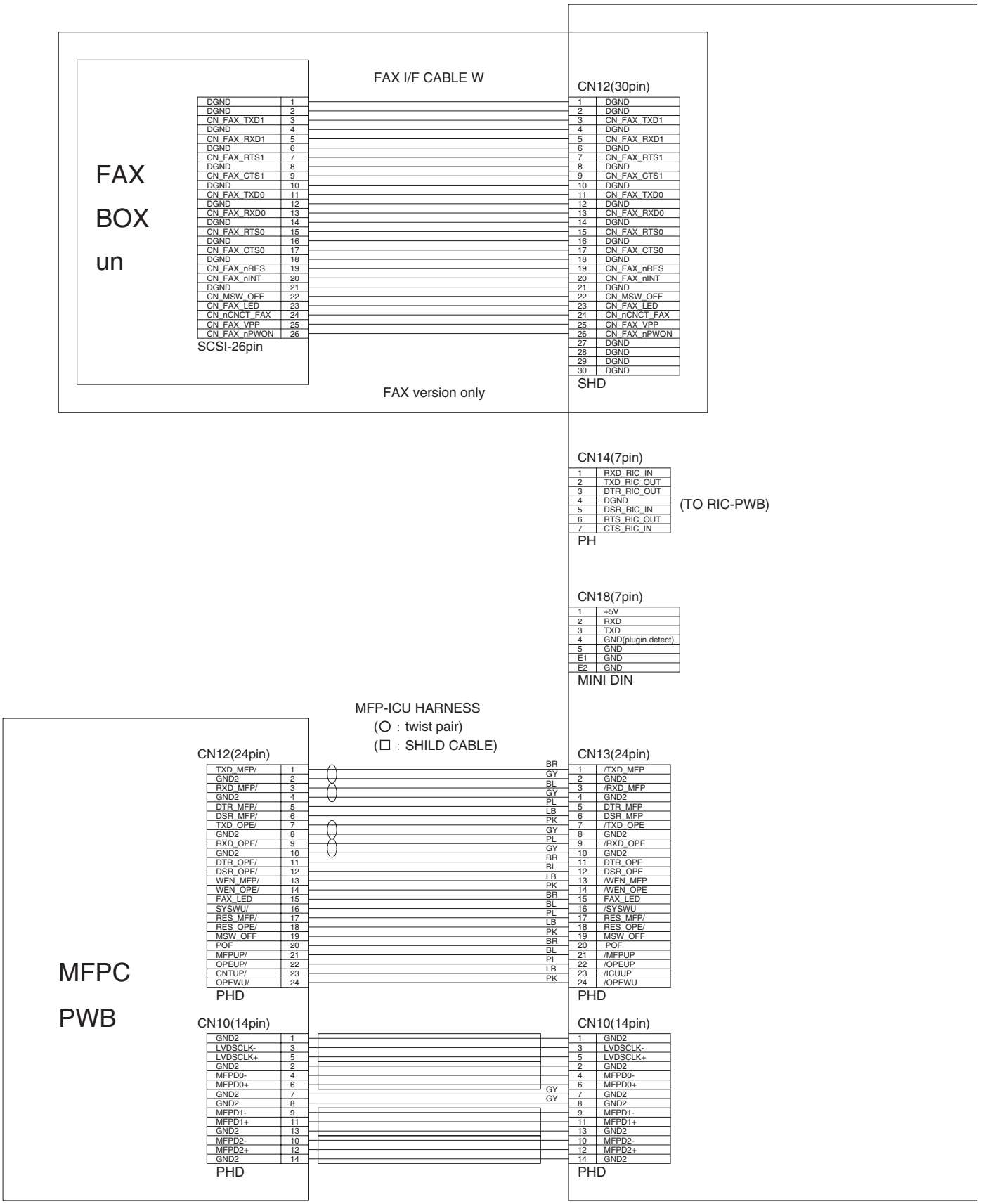

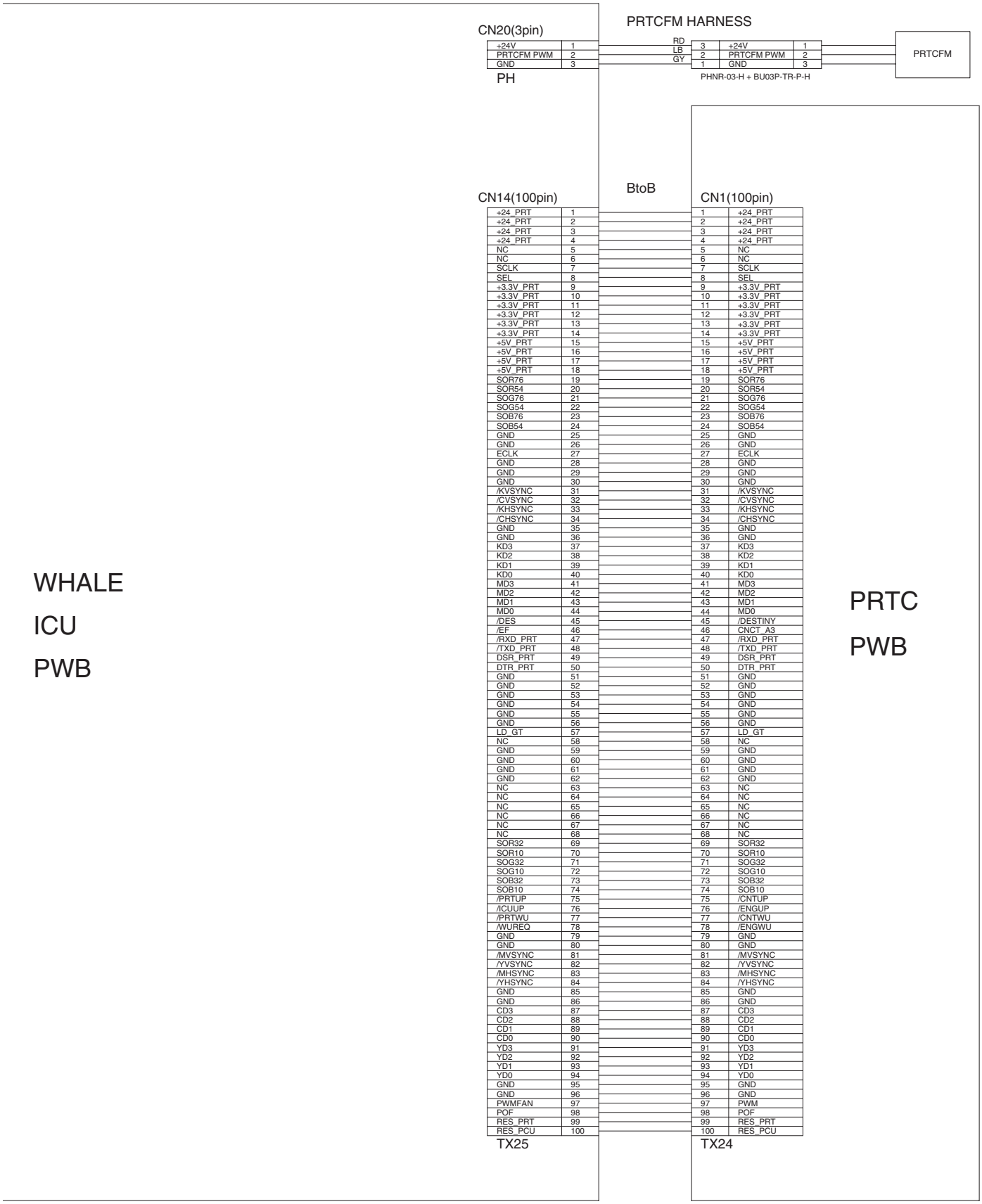
WHALE
ICU
PWB
CN20(3pin)
+24V 1
PRTCFM PWM 2
GND 3
PH
PRTCFM HARNESS
RD
LB
GY
3 +24V 1
2 PRTCFM PWM 2
1 GND 3
PHNR-03-H + BU03P-TR-P-H
PRTCFM
BtoB
CN14(100pin)
+24_PRT 1
+24_PRT 2
+24_PRT 3
+24_PRT 4
NC 5
NC 6
SCLK 7
SEL 8
+3.3V_PRT 9
+3.3V_PRT 10
+3.3V_PRT 11
+3.3V_PRT 12
+3.3V_PRT 13
+3.3V_PRT 14
+5V_PRT 15
+5V_PRT 16
+5V_PRT 17
+5V_PRT 18
SOR76 19
SOR54 20
SOG76 21
SOG54 22
SOB76 23
SOB54 24
GND 25
GND 26
ECLK 27
GND 28
GND 29
GND 30
/KVSYNC 31
/CVSYNC 32
/KHSYNC 33
/CHSYNC 34
GND 35
GND 36
KD3 37
KD2 38
KD1 39
KD0 40
MD3 41
MD2 42
MD1 43
MD0 44
/DES 45
/EF 46
/RXD_PRT 47
/TXD_PRT 48
DSR_PRT 49
DTR_PRT 50
GND 51
GND 52
GND 53
GND 54
GND 55
GND 56
LD_GT 57
NC 58
GND 59
GND 60
GND 61
GND 62
NC 63
NC 64
NC 65
NC 66
NC 67
NC 68
SOR32 69
SOR10 70
SOG32 71
SOG10 72
SOB32 73
SOB10 74
/PRTUP 75
/ICUUP 76
/PRTWU 77
/WUREQ 78
GND 79
GND 80
/MVSYNC 81
/YVSYNC 82
/MHSYNC 83
/YHSYNC 84
GND 85
GND 86
CD3 87
CD2 88
CD1 89
CD0 90
YD3 91
YD2 92
YD1 93
YD0 94
GND 95
GND 96
PWMFAN 97
POF 98
RES_PRT 99
RES_PCU 100
TX25
CN1(100pin)
1 +24_PRT
2 +24_PRT
3 +24_PRT
4 +24_PRT
5 NC
6 NC
7 SCLK
8 SEL
9 +3.3V_PRT
10 +3.3V_PRT
11 +3.3V_PRT
12 +3.3V_PRT
13 +3.3V_PRT
14 +3.3V_PRT
15 +5V_PRT
16 +5V_PRT
17 +5V_PRT
18 +5V_PRT
19 SOR76
20 SOR54
21 SOG76
22 SOG54
23 SOB76
24 SOB54
25 GND
26 GND
27 ECLK
28 GND
29 GND
30 GND
31 /KVSYNC
32 /CVSYNC
33 /KHSYNC
34 /CHSYNC
35 GND
36 GND
37 KD3
38 KD2
39 KD1
40 KD0
41 MD3
42 MD2
43 MD1
44 MD0
45 /DESTINY
46 CNCT_A3
47 /RXD_PRT
48 /TXD_PRT
49 DSR_PRT
50 DTR_PRT
51 GND
52 GND
53 GND
54 GND
55 GND
56 GND
57 LD_GT
58 NC
59 GND
60 GND
61 GND
62 GND
63 NC
64 NC
65 NC
66 NC
67 NC
68 NC
69 SOR32
70 SOR10
71 SOG32
72 SOG10
73 SOB32
74 SOB10
75 /CNTUP
76 /ENGUP
77 /CNTWU
78 /ENGWU
79 GND
80 GND
81 /MVSYNC
82 /YVSYNC
83 /MHSYNC
84 /YHSYNC
85 GND
86 GND
87 CD3
88 CD2
89 CD1
90 CD0
91 YD3
92 YD2
93 YD1
94 YD0
95 GND
96 GND
97 PWM
98 POF
99 RES_PRT
100 RES_PCU
TX24
PRTC
PWB

[4] CIRCUIT DIAGRAM AND PARTS LAYOUT / 回路図と部品配置図

A. PCU PWB

PCU PWB (Connector Section)

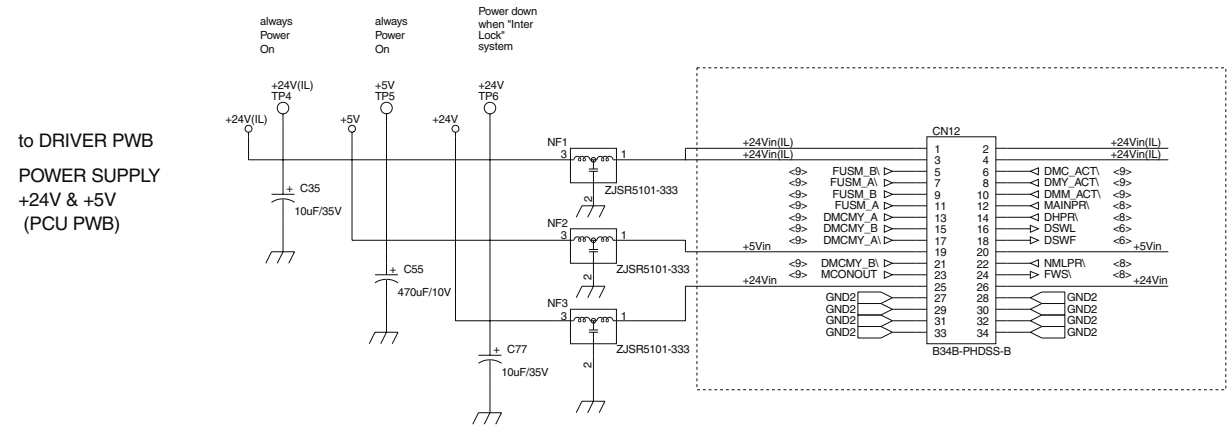

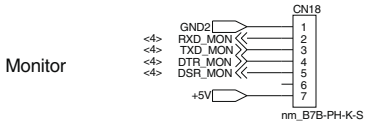

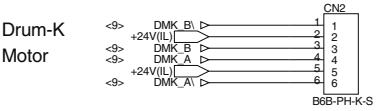

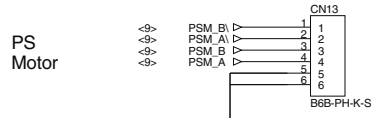

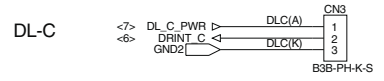

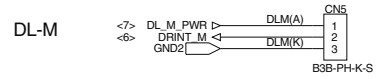

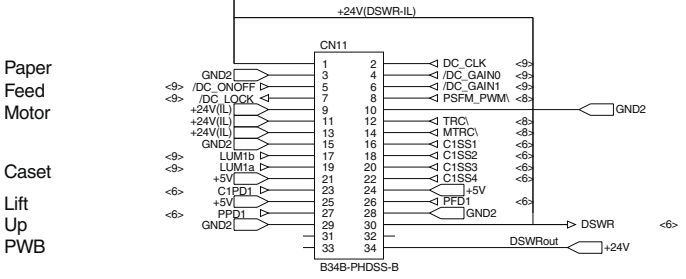

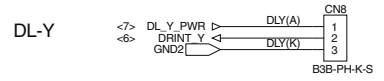

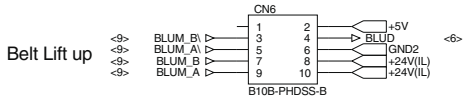

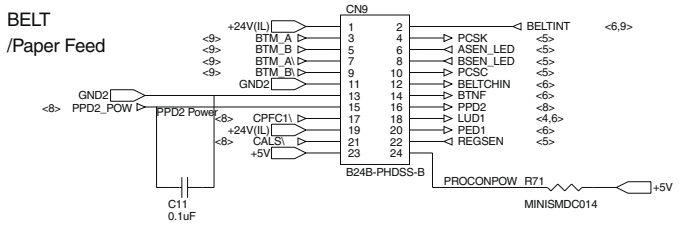

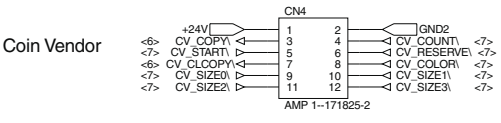

ManualFeed
/HUD
/ContFM
/HV

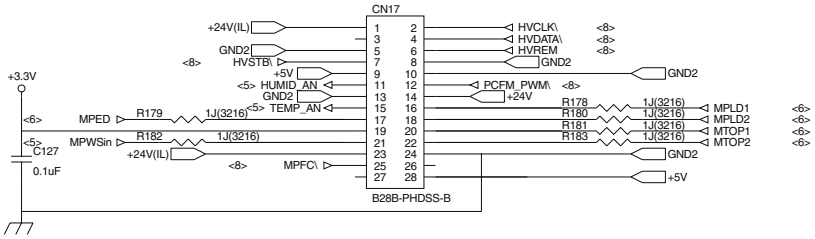

ICU-PWB
(1.0mmFFC)

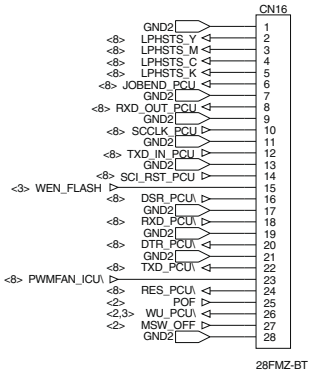

DV-CRUM
Chip (I2C)

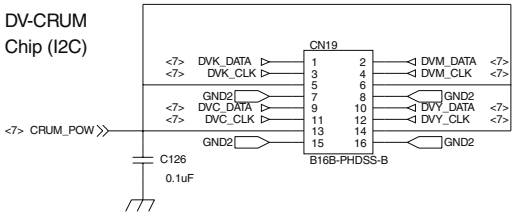

FUSER

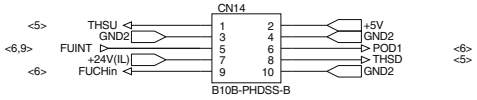

MINI OPE
(1.0mmP
FFC)

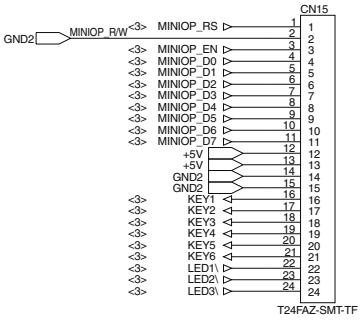

Paper Out

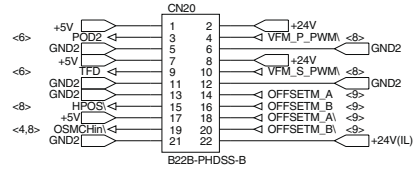

AC-Cont
/DESK
Option
etc

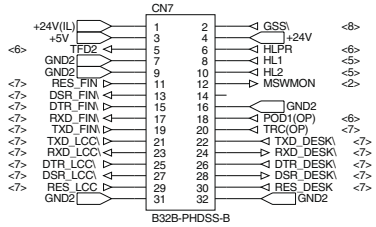

Toner
Empty
Sensor

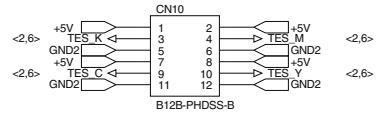

PCU PWB (CPU Section)

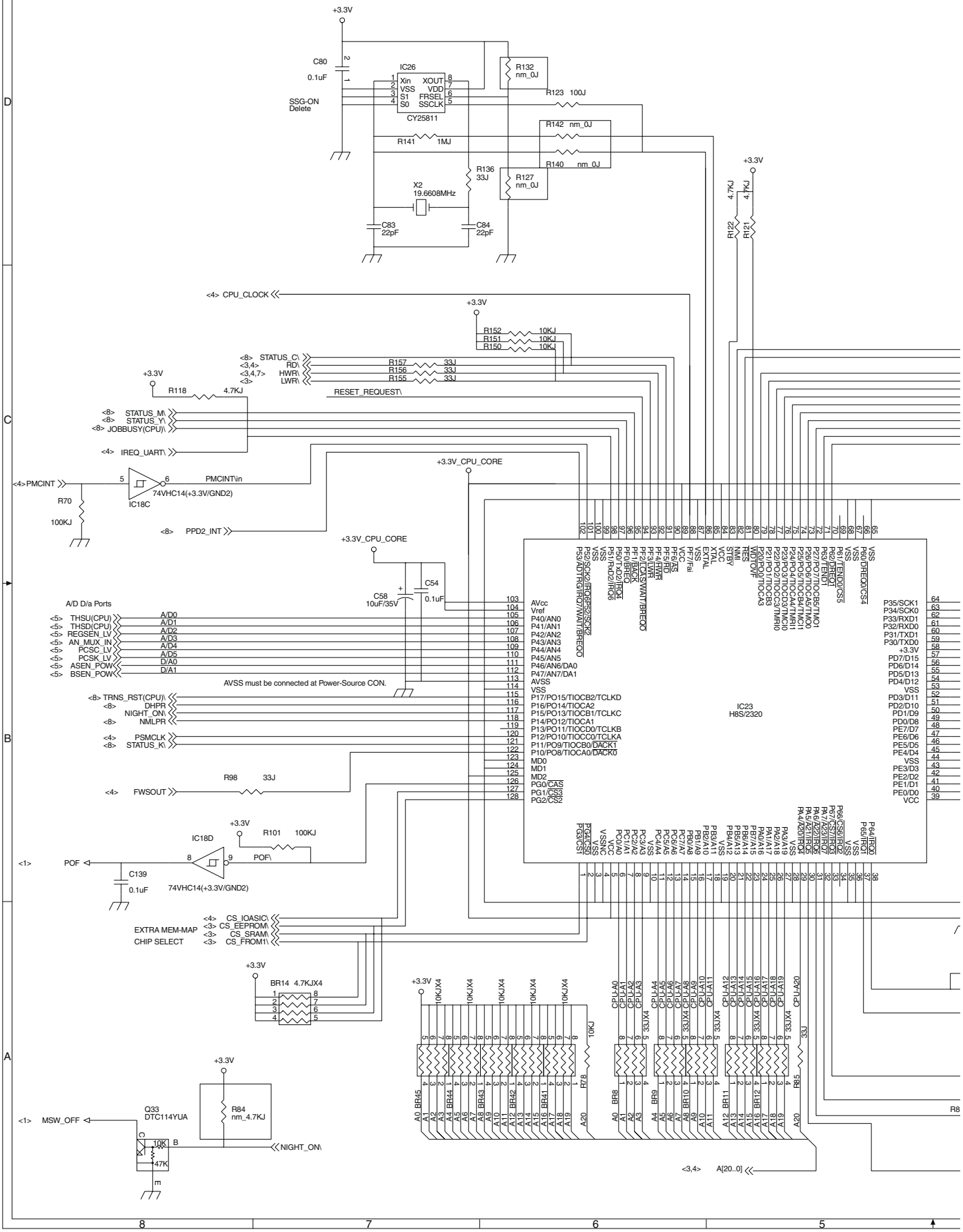

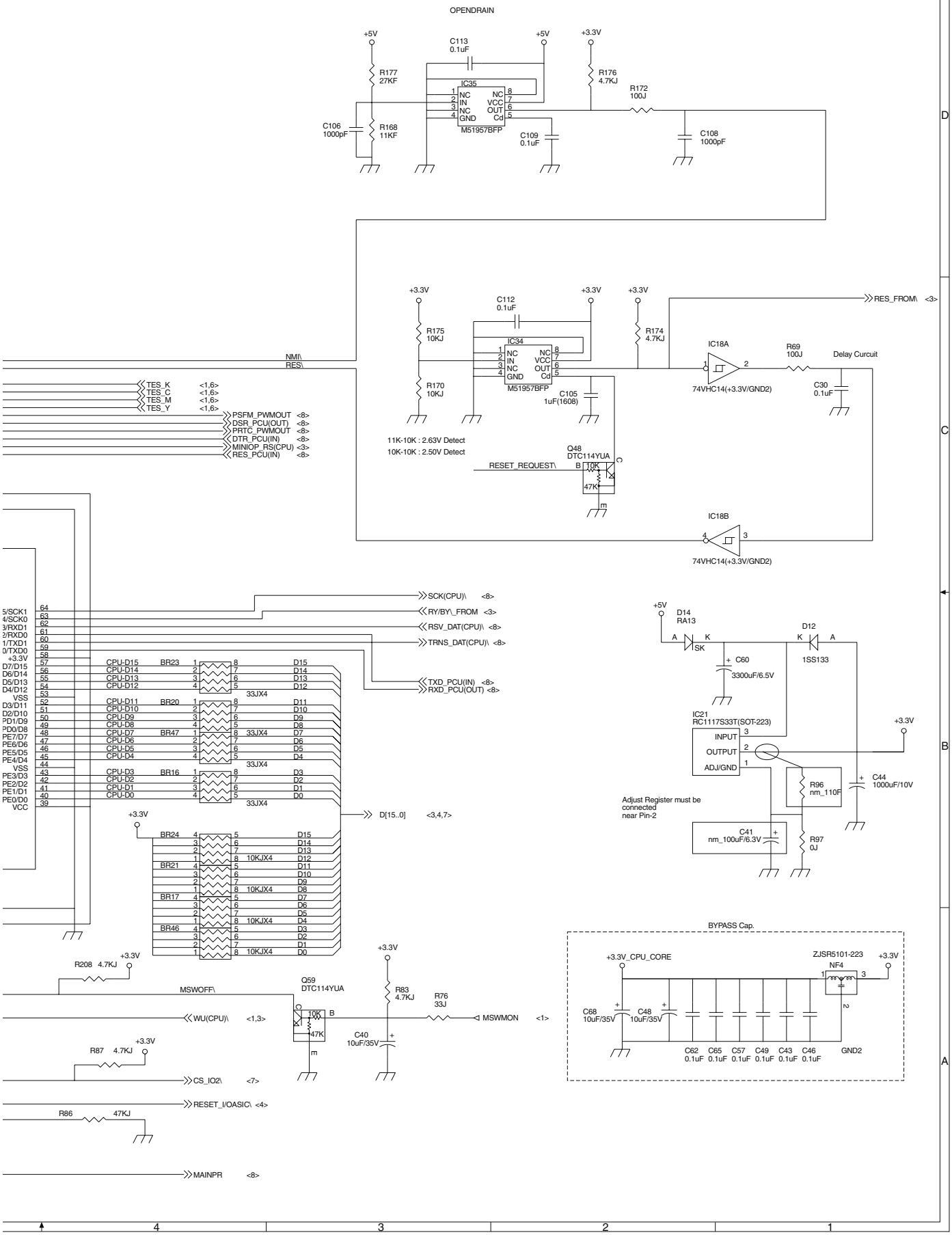
OPENDRAIN
+5V
C113
0.1uF
+5V
+3.3V
R177
27KF
IC35
R176
4.7KJ
R172
100J
C106
1000pF
R168
11KF
NC
IN
NC
GND
NC
VCC
OUT
Cd
M51957BFP
C109
0.1uF
C108
1000pF
+3.3V
C112
0.1uF
+3.3V
+3.3V
RES_FROM\ <3>
R175
10KJ
IC34
R174
4.7KJ
IC18A
R69
100J
Delay Curcuit
NM\
RES\
R170
10KJ
M51957BFP
C105
1uF(1608)
74VHC14(+3.3V/GND2)
C30
0.1uF
TES_K <1,6>
TES_C <1,6>
TES_M <1,6>
TES_Y <1,6>
PSFM_PWMOUT <8>
DSR_PCU(OUT) <8>
PRTC_PWMOUT <8>
DTR_PCU(IN) <8>
MINIOP_RS(CPU) <3>
RES_PCU(IN) <8>
11K-10K : 2.63V Detect
10K-10K : 2.50V Detect
Q48
DTC114YUA
RESET_REQUEST\
B
10K
47K
IC18B
74VHC14(+3.3V/GND2)
SCK(CPU)\ <8>
RY/BY_FROM <3>
RSV_DAT(CPU)\ <8>
TRNS_DAT(CPU)\ <8>
TXD_PCU(IN) <8>
RXD_PCU(OUT) <8>
5/SCK1
4/SCK0
3/RXD1
2/RXD0
1/TXD1
0/TXD0
+3.3V
D7/D15
D6/D14
D5/D13
D4/D12
VSS
D3/D11
D2/D10
D1/D9
D0/D8
PE7/D7
PE6/D6
PE5/D5
PE4/D4
VSS
PE3/D3
PE2/D2
PE1/D1
PE0/D0
VCC
CPU-D15
CPU-D14
CPU-D13
CPU-D12
BR23
33JX4
CPU-D11
CPU-D10
CPU-D9
CPU-D8
CPU-D7
CPU-D6
CPU-D5
CPU-D4
BR20
BR47
33JX4
CPU-D3
CPU-D2
CPU-D1
CPU-D0
BR16
33JX4
D[15..0] <3,4,7>
+3.3V
BR24
BR21
BR17
BR46
10KJX4
D15
D14
D13
D12
D11
D10
D9
D8
D7
D6
D5
D4
D3
D2
D1
D0
+5V
D14
RA13
D12
1SS133
C60
3300uF/6.5V
IC21
RC1117S33T(SOT-223)
INPUT
OUTPUT
ADJ/GND
+3.3V
R96
nm_110F
C44
1000uF/10V
Adjust Register must be
connected
near Pin-2
C41
nm_100uF/6.3V
R97
0J
BYPASS Cap.
+3.3V_CPU_CORE
ZJSR5101-223
NF4
+3.3V
C68
10uF/35V
C48
10uF/35V
C62
0.1uF
C65
0.1uF
C57
0.1uF
C49
0.1uF
C43
0.1uF
C46
0.1uF
GND2
R208 4.7KJ
+3.3V
MSWOFF\
Q59
DTC114YUA
R83
4.7KJ
+3.3V
R76
33J
WU(CPU)\ <1,3>
10K
47K
B
MSWMON <1>
C40
10uF/35V
R87 4.7KJ
+3.3V
CS_IO2\ <7>
RESET_I/OASIC\ <4>
R86 47KJ
MAINPR <8>

PCU PWB (SRAM, EEPROM, Flash Memory, Mini-OP Section)

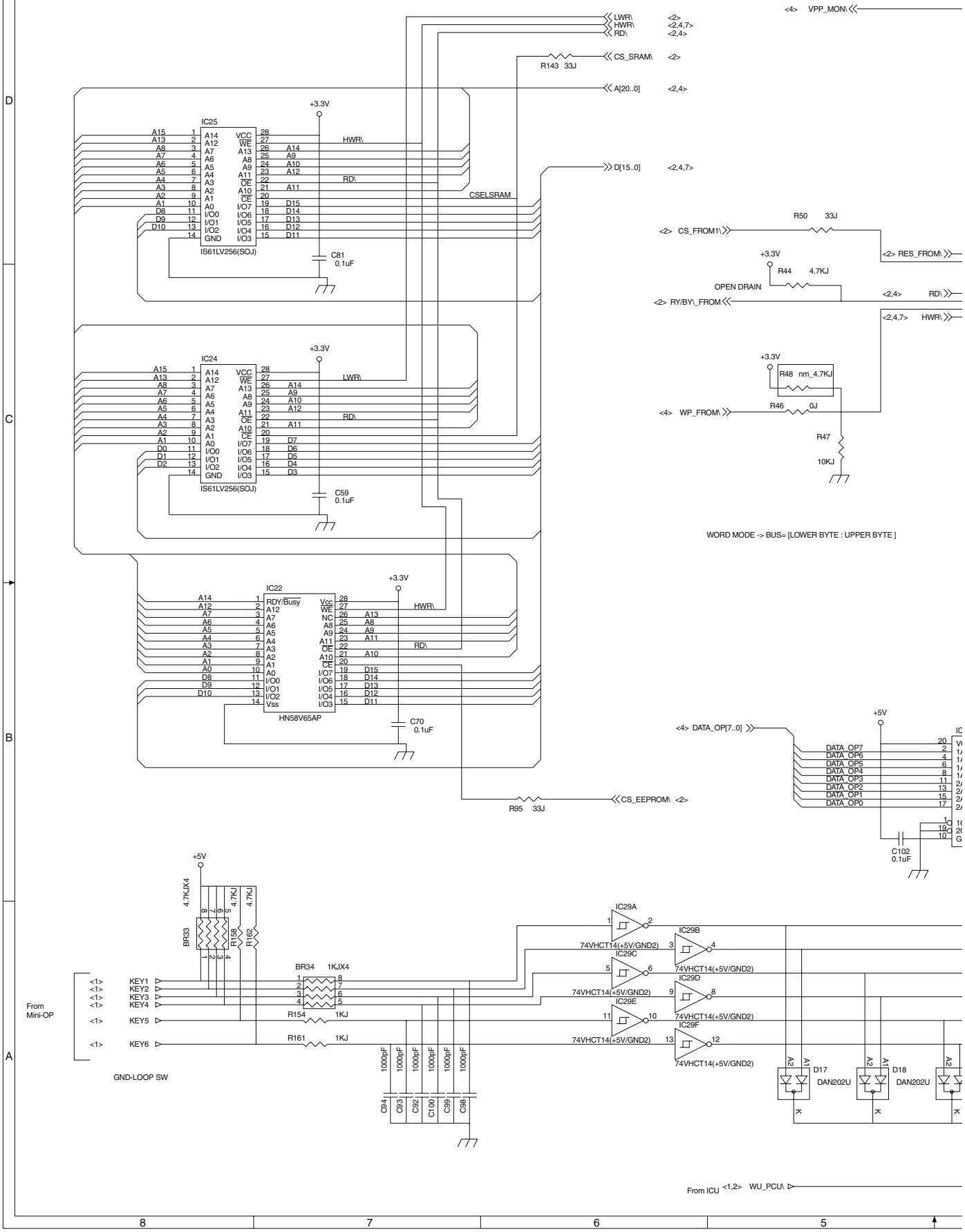

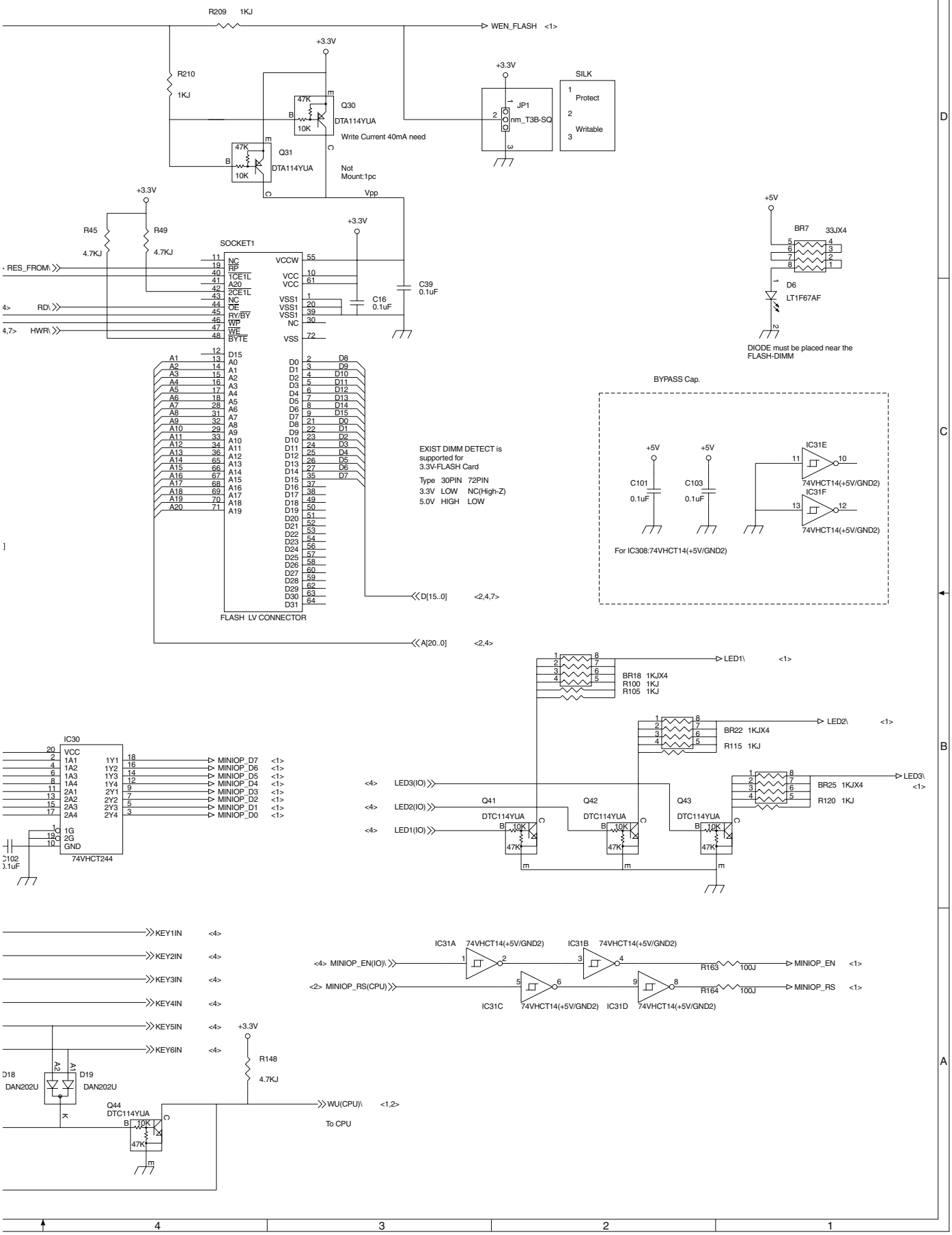
R209 1KJ
WEN_FLASH <1>
+3.3V
R210
1KJ
Q30
DTA114YUA
Write Current 40mA need
Q31
DTA114YUA
Not
Mount:1pc
Vpp
JP1
nm_T3B-SQ
SILK
Protect
Writable
R45
R49
4.7KJ
SOCKET1
RES_FROM\
RD\
HWR\
C39
0.1uF
C16
0.1uF
FLASH LV CONNECTOR
D[15..0] <2,4,7>
A[20..0] <2,4>
EXIST DIMM DETECT is
supported for
3.3V-FLASH Card
Type 30PIN 72PIN
3.3V LOW NC(High-Z)
5.0V HIGH LOW
BR7 33JX4
D6
LT1F67AF
DIODE must be placed near the
FLASH-DIMM
BYPASS Cap.
C101
C103
0.1uF
IC31E
IC31F
74VHCT14(+5V/GND2)
For IC308:74VHCT14(+5V/GND2)
IC30
74VHCT244
MINIOP_D7 <1>
MINIOP_D6 <1>
MINIOP_D5 <1>
MINIOP_D4 <1>
MINIOP_D3 <1>
MINIOP_D2 <1>
MINIOP_D1 <1>
MINIOP_D0 <1>
LED1\ <1>
LED2\ <1>
LED3\ <1>
BR18 1KJX4
R100 1KJ
R105 1KJ
BR22 1KJX4
R115 1KJ
BR25 1KJX4
R120 1KJ
LED3(IO)
LED2(IO)
LED1(IO)
Q41
Q42
Q43
DTC114YUA
KEY1IN <4>
KEY2IN <4>
KEY3IN <4>
KEY4IN <4>
KEY5IN <4>
KEY6IN <4>
D18
D19
DAN202U
R148
4.7KJ
Q44
DTC114YUA
WU(CPU)\ <1,2>
To CPU
IC31A
IC31B
IC31C
IC31D
MINIOP_EN(IO)\
MINIOP_RS(CPU)
R163 100J
R164 100J
MINIOP_EN <1>
MINIOP_RS <1>

PCU PWB (I/O Gate Array Section)

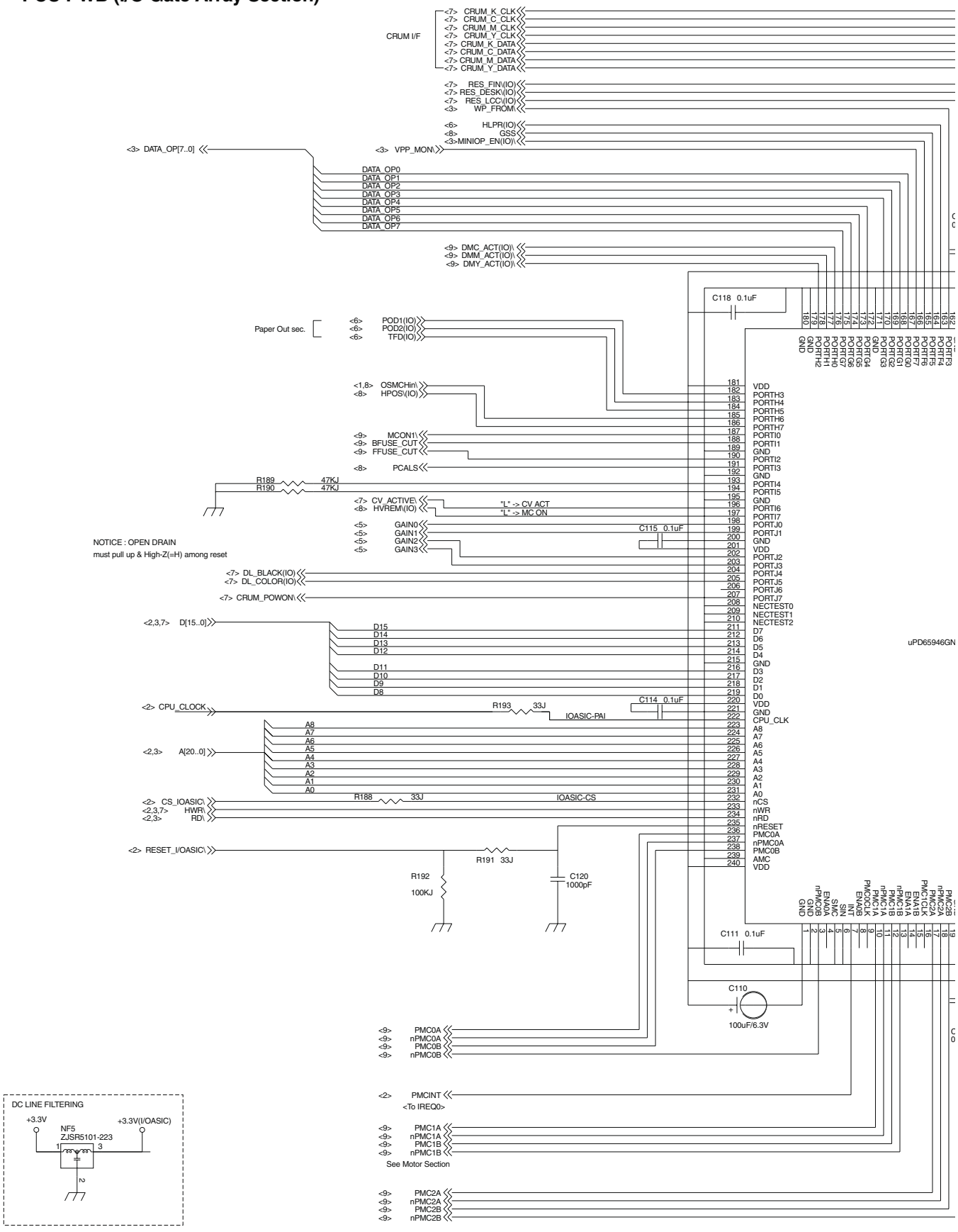

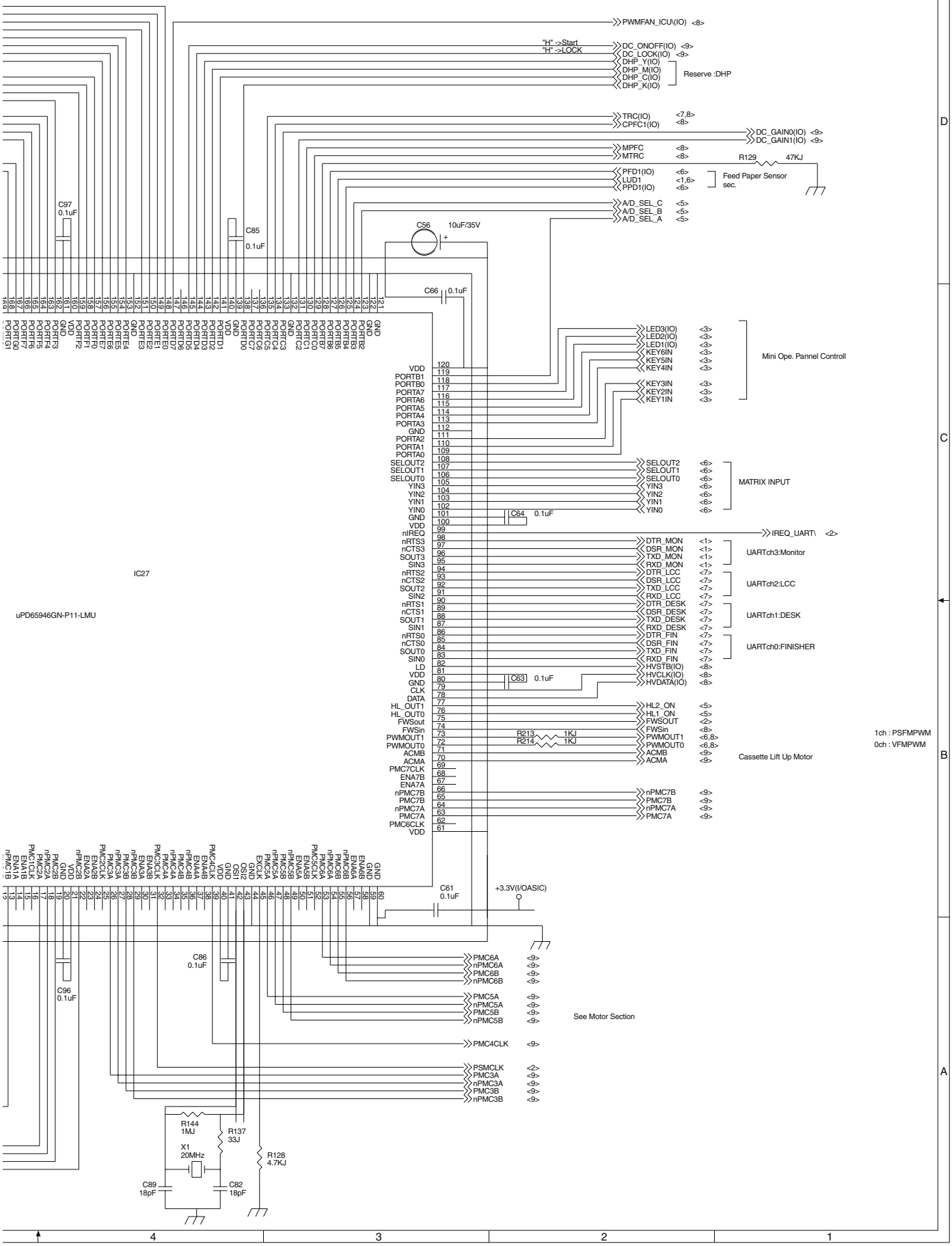
IC27
uPD65946GN-P11-LMU
PWMFAN_ICU(IO) <8>
"H" ->Start
"H" ->LOCK
DC_ONOFF(IO) <9>
DC_LOCK(IO) <9>
DHP_Y(IO)
DHP_M(IO)
DHP_C(IO)
DHP_K(IO)
Reserve :DHP
TRC(IO) <7,8>
CPFC1(IO) <8>
DC_GAIN0(IO) <9>
DC_GAIN1(IO) <9>
MPFC <8>
MTRC <8>
R129 47KJ
PFD1(IO) <6>
LUD1 <1,6>
PPD1(IO) <6>
Feed Paper Sensor sec.
A/D_SEL_C <5>
A/D_SEL_B <5>
A/D_SEL_A <5>
C97 0.1uF
C85 0.1uF
C56 10uF/35V
C66 0.1uF
LED3(IO) <3>
LED2(IO) <3>
LED1(IO) <3>
KEY6IN <3>
KEY5IN <3>
KEY4IN <3>
KEY3IN <3>
KEY2IN <3>
KEY1IN <3>
Mini Ope. Pannel Controll
SELOUT2 <6>
SELOUT1 <6>
SELOUT0 <6>
YIN3 <6>
YIN2 <6>
YIN1 <6>
YIN0 <6>
MATRIX INPUT
C64 0.1uF
IREQ_UART\ <2>
DTR_MON <1>
DSR_MON <1>
TXD_MON <1>
RXD_MON <1>
UARTch3:Monitor
DTR_LCC <7>
DSR_LCC <7>
TXD_LCC <7>
RXD_LCC <7>
UARTch2:LCC
DTR_DESK <7>
DSR_DESK <7>
TXD_DESK <7>
RXD_DESK <7>
UARTch1:DESK
DTR_FIN <7>
DSR_FIN <7>
TXD_FIN <7>
RXD_FIN <7>
UARTch0:FINISHER
HVSTB(IO) <8>
HVCLK(IO) <8>
HVDATA(IO) <8>
C63 0.1uF
HL2_ON <5>
HL1_ON <5>
FWSOUT <2>
FWSin <8>
R213 1KJ
R214 1KJ
PWMOUT1 <6,8>
PWMOUT0 <6,8>
ACMB <9>
ACMA <9>
Cassette Lift Up Motor
1ch : PSFMPWM
0ch : VFMPWM
nPMC7B <9>
PMC7B <9>
nPMC7A <9>
PMC7A <9>
C61 0.1uF
+3.3V(I/OASIC)
C86 0.1uF
C96 0.1uF
PMC6A <9>
nPMC6A <9>
PMC6B <9>
nPMC6B <9>
PMC5A <9>
nPMC5A <9>
PMC5B <9>
nPMC5B <9>
See Motor Section
PMC4CLK <9>
PSMCLK <2>
PMC3A <9>
nPMC3A <9>
PMC3B <9>
nPMC3B <9>
R144 1MJ
R137 33J
R128 4.7KJ
X1 20MHz
C89 18pF
C82 18pF

PCU PWB (A/D,D/A Convert Section)

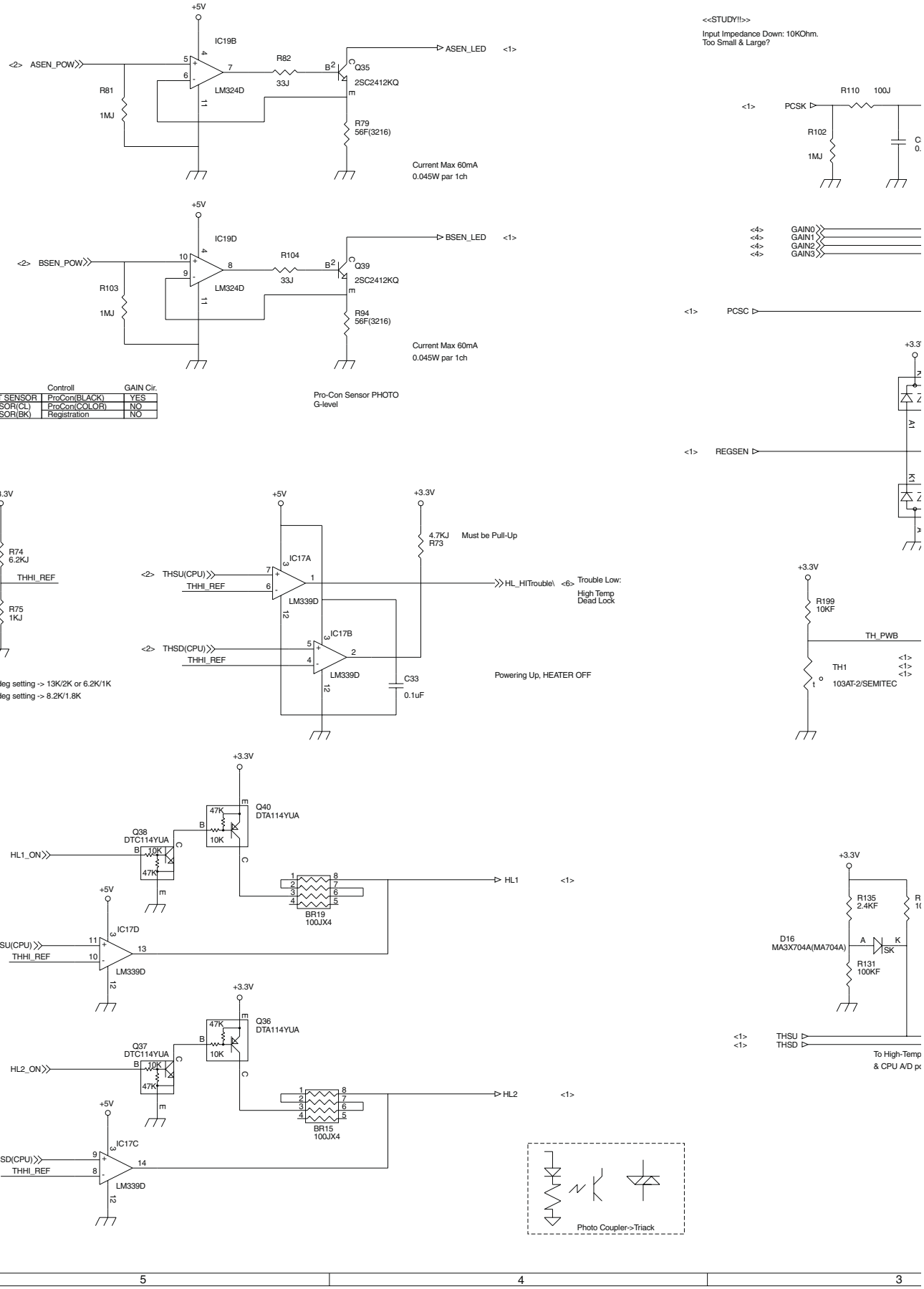

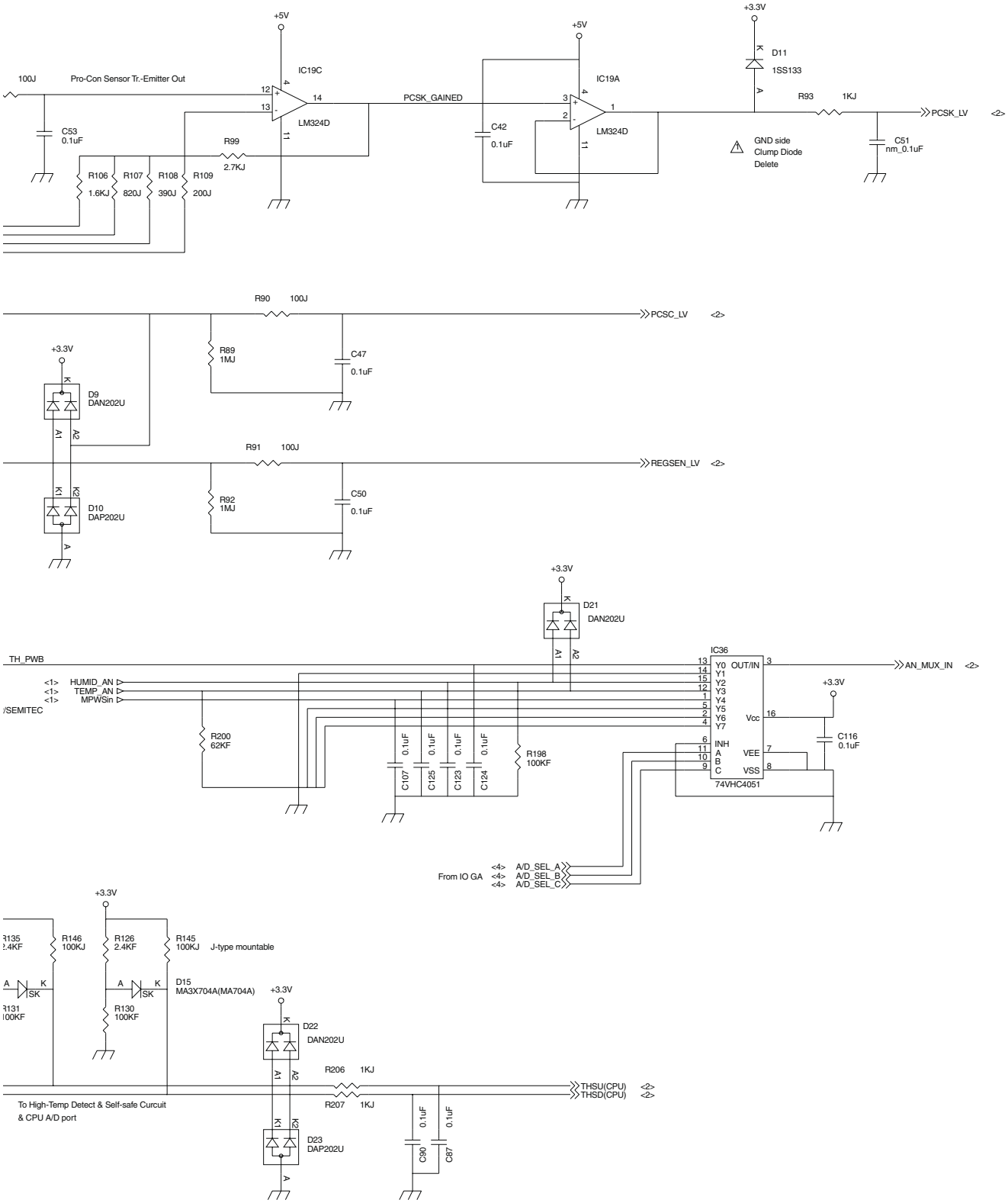
+5V
IC19C
100J
Pro-Con Sensor Tr.-Emitter Out
12
13
14
LM324D
11
PCSK_GAINED
C53
0.1uF
R99
2.7KJ
R106
1.6KJ
R107
820J
R108
390J
R109
200J
+5V
IC19A
3
2
1
LM324D
C42
0.1uF
+3.3V
D11
1SS133
R93
1KJ
PCSK_LV
<2>
GND side
Clump Diode
Delete
C51
nm_0.1uF
R90
100J
PCSC_LV
<2>
R89
1MJ
C47
0.1uF
+3.3V
D9
DAN202U
R91
100J
REGSEN_LV
<2>
D10
DAP202U
R92
1MJ
C50
0.1uF
+3.3V
D21
DAN202U
TH_PWB
<1> HUMID_AN
<1> TEMP_AN
<1> MPWSin
/SEMITEC
IC36
Y0 OUT/IN
Y1
Y2
Y3
Y4
Y5
Y6
Y7
INH
A
B
C
Vcc
VEE
VSS
74VHC4051
AN_MUX_IN
<2>
+3.3V
C116
0.1uF
R200
62KF
C107
C125
C123
C124
0.1uF
R198
100KF
From IO GA
<4> A/D_SEL_A
<4> A/D_SEL_B
<4> A/D_SEL_C
+3.3V
R146
100KJ
R126
2.4KF
R145
100KJ
J-type mountable
D15
MA3X704A(MA704A)
R130
100KF
+3.3V
D22
DAN202U
R206
1KJ
R207
1KJ
THSU(CPU)
THSD(CPU)
<2>
To High-Temp Detect & Self-safe Curcuit
& CPU A/D port
D23
DAP202U
C90
C87
0.1uF

PCU PWB (Matrixed Sensing INPUT Section)

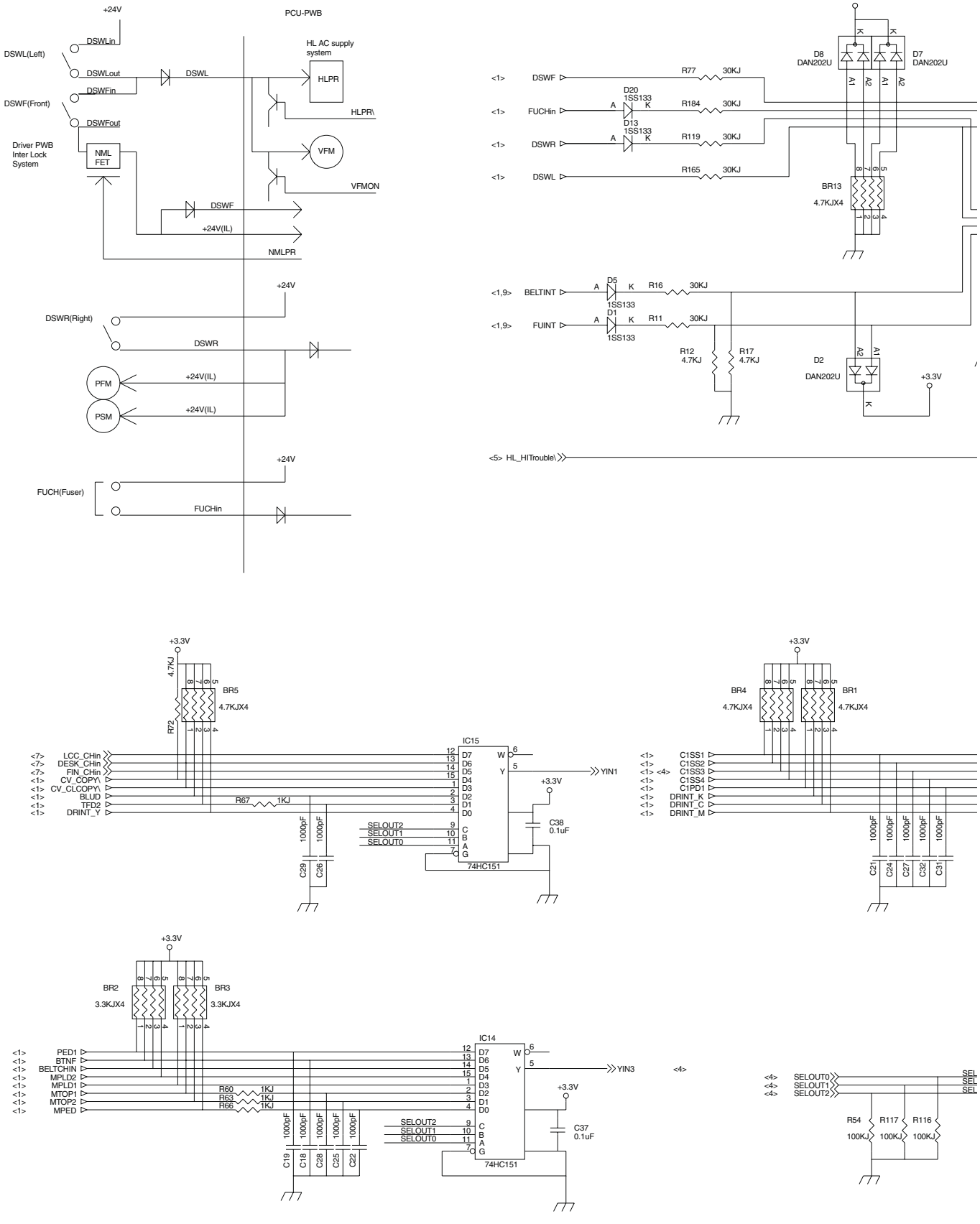

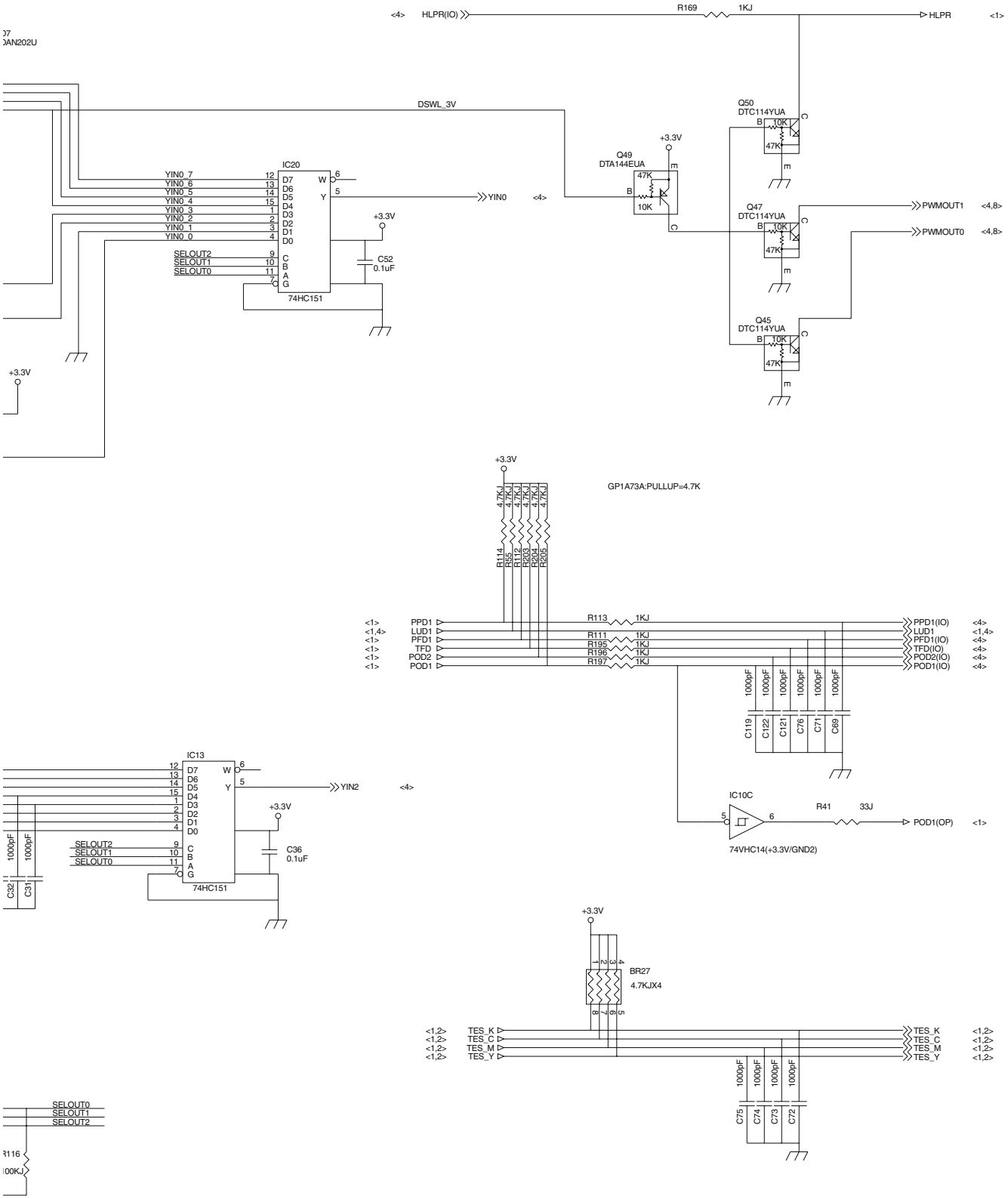
3
2
1
D
C
B
A
<4> HLPR(IO)
R169 1KJ
HLPR <1>
DSWL_3V
Q50 DTC114YUA
Q49 DTA144EUA
Q47 DTC114YUA
Q45 DTC114YUA
10K
47K
+3.3V
IC20
74HC151
YIN0_7
YIN0_6
YIN0_5
YIN0_4
YIN0_3
YIN0_2
YIN0_1
YIN0_0
SELOUT2
SELOUT1
SELOUT0
YIN0 <4>
C52 0.1uF
PWMOUT1 <4,8>
PWMOUT0 <4,8>
GP1A73A:PULLUP=4.7K
4.7KJ
R114
R55
R112
R203
R204
R205
PPD1
LUD1
PFD1
TFD
POD2
POD1
R113 1KJ
R111 1KJ
R195 1KJ
R196 1KJ
R197 1KJ
PPD1(IO) <4>
LUD1 <1,4>
PFD1(IO) <4>
TFD(IO) <4>
POD2(IO) <4>
POD1(IO) <4>
1000pF
C119
C122
C121
C76
C71
C69
IC13
YIN2 <4>
C36 0.1uF
C32
C31
IC10C
R41 33J
POD1(OP) <1>
74VHC14(+3.3V/GND2)
BR27
4.7KJX4
TES_K
TES_C
TES_M
TES_Y
C75
C74
C73
C72
R116
100KJ

PCU PWB (Option UART & CRUM & Coin Vendor section)

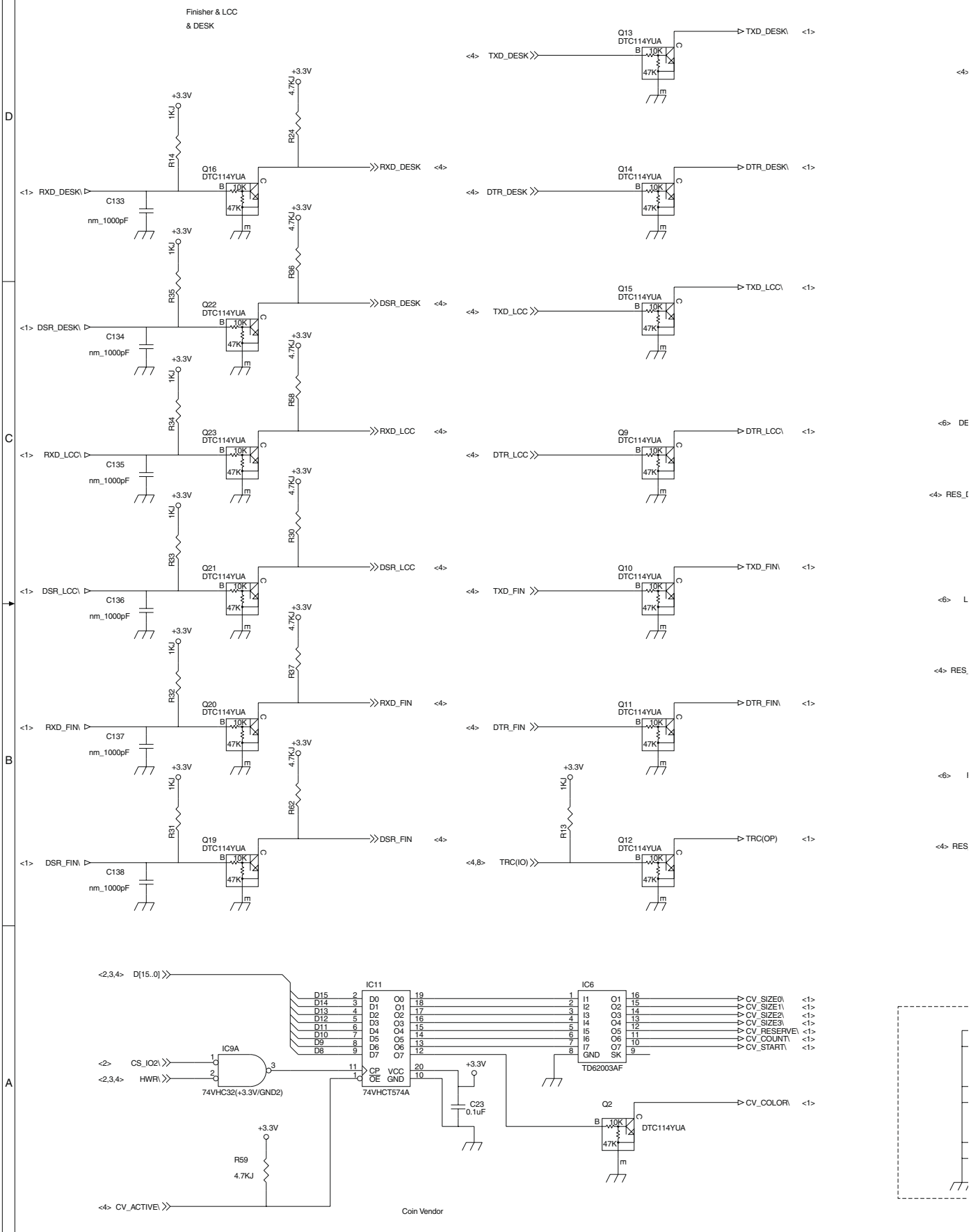

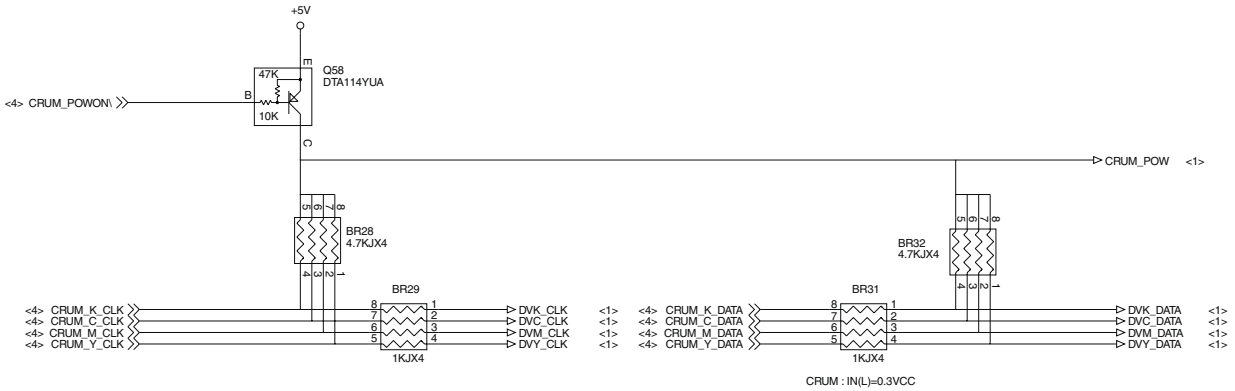
+5V
Q58
DTA114YUA
47K
10K
<4> CRUM_POWON\
CRUM_POW <1>
BR28
4.7KJX4
BR29
1KJX4
<4> CRUM_K_CLK
<4> CRUM_C_CLK
<4> CRUM_M_CLK
<4> CRUM_Y_CLK
DVK_CLK
DVC_CLK
DVM_CLK
DVY_CLK
BR32
4.7KJX4
BR31
1KJX4
<4> CRUM_K_DATA
<4> CRUM_C_DATA
<4> CRUM_M_DATA
<4> CRUM_Y_DATA
DVK_DATA
DVC_DATA
DVM_DATA
DVY_DATA
CRUM : IN(L)=0.3VCC

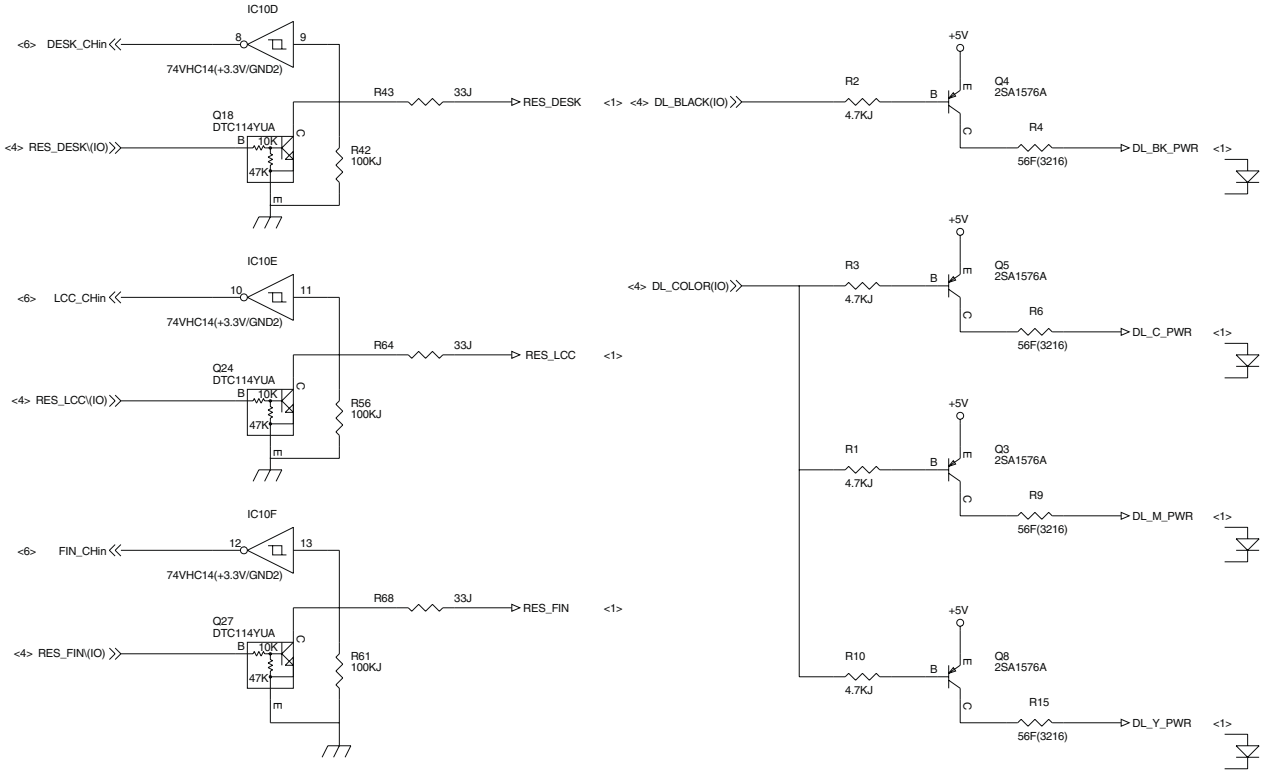
IC10D
<6> DESK_CHin
74VHC14(+3.3V/GND2)
R43
33J
RES_DESK
Q18
DTC114YUA
<4> RES_DESK\(IO)
R42
100KJ
IC10E
<6> LCC_CHin
74VHC14(+3.3V/GND2)
R64
33J
RES_LCC
Q24
DTC114YUA
<4> RES_LCC\(IO)
R56
100KJ
IC10F
<6> FIN_CHin
74VHC14(+3.3V/GND2)
R68
33J
RES_FIN
Q27
DTC114YUA
<4> RES_FIN\(IO)
R61
100KJ
<4> DL_BLACK(IO)
R2
4.7KJ
Q4
2SA1576A
R4
56F(3216)
DL_BK_PWR
<4> DL_COLOR(IO)
R3
4.7KJ
Q5
2SA1576A
R6
56F(3216)
DL_C_PWR
R1
4.7KJ
Q3
2SA1576A
R9
56F(3216)
DL_M_PWR
R10
4.7KJ
Q8
2SA1576A
R15
56F(3216)
DL_Y_PWR

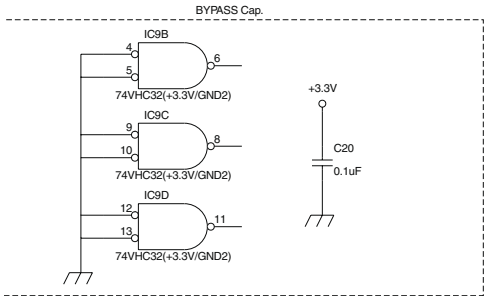
BYPASS Cap.
IC9B
74VHC32(+3.3V/GND2)
IC9C
74VHC32(+3.3V/GND2)
IC9D
74VHC32(+3.3V/GND2)
+3.3V
C20
0.1uF

PCU PWB (2003 & HV & Interface Section)

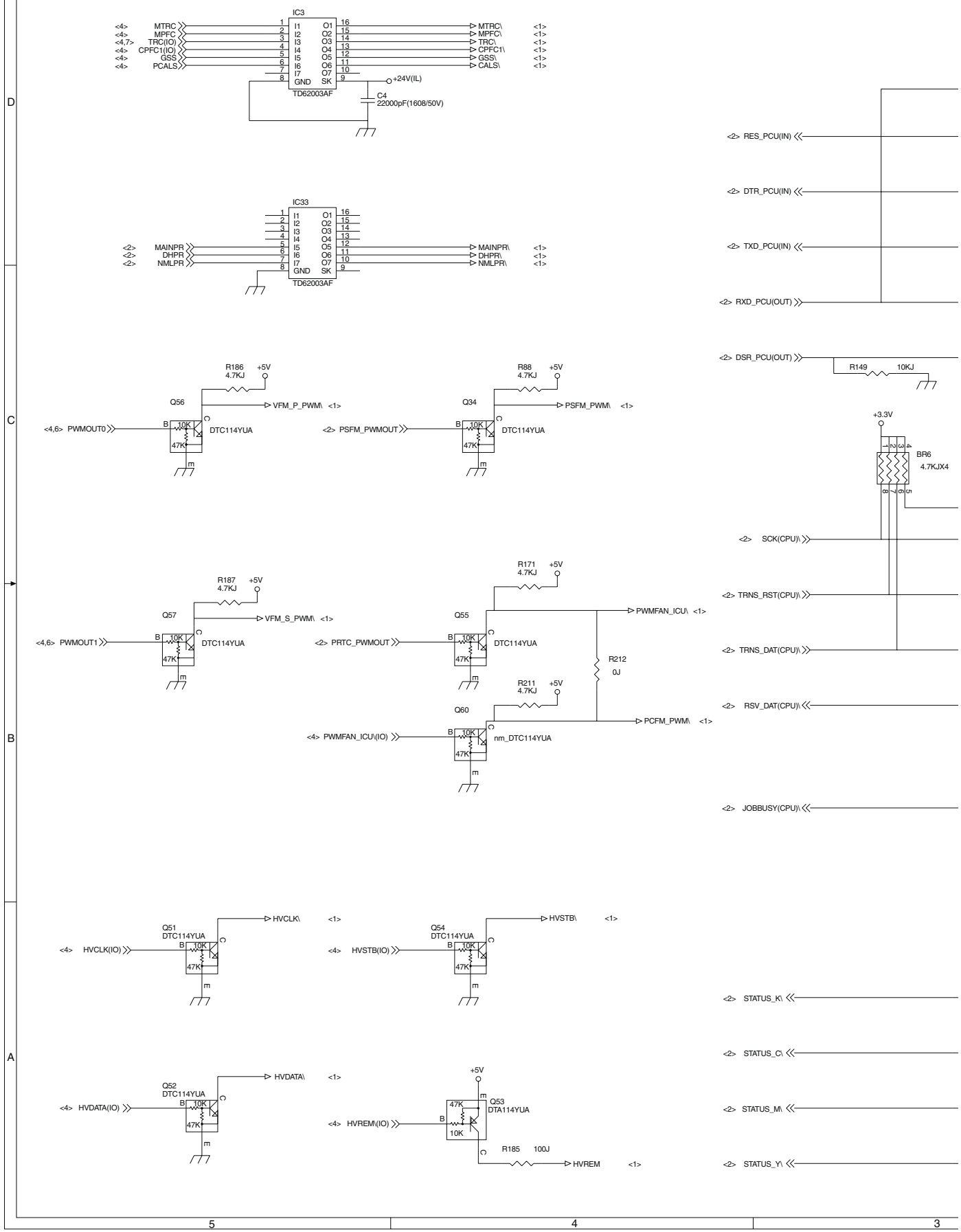

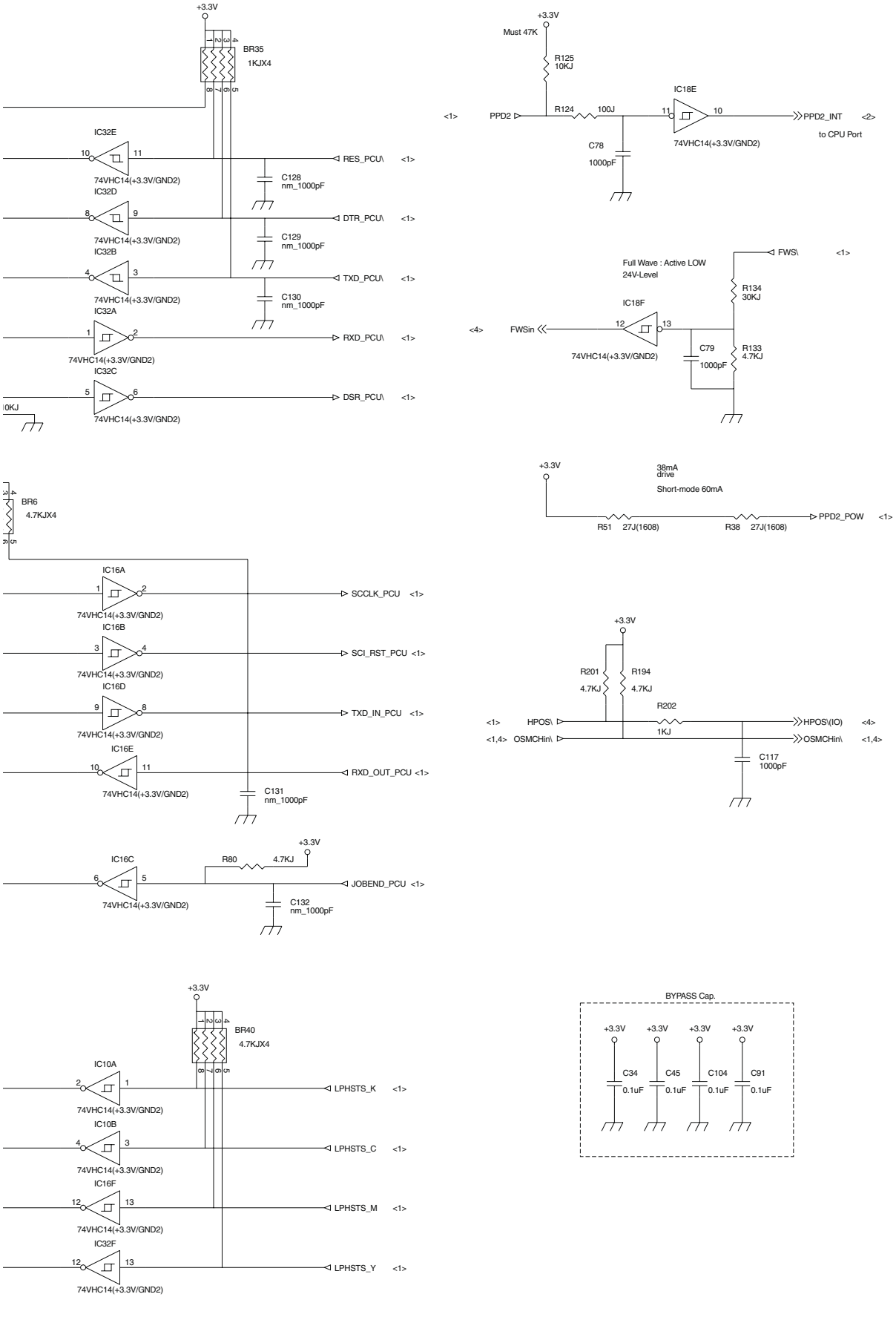
+3.3V
BR35
1KJX4
IC32E
74VHC14(+3.3V/GND2)
RES_PCU\ <1>
C128
nm_1000pF
IC32D
DTR_PCU\ <1>
C129
nm_1000pF
IC32B
TXD_PCU\ <1>
C130
nm_1000pF
IC32A
RXD_PCU\ <1>
IC32C
DSR_PCU\ <1>
0KJ
+3.3V
Must 47K
R125
10KJ
<1>
PPD2
R124
100J
IC18E
PPD2_INT <2>
to CPU Port
C78
1000pF
FWS\ <1>
Full Wave : Active LOW
24V-Level
R134
30KJ
IC18F
<4>
FWSin
C79
1000pF
R133
4.7KJ
BR6
4.7KJX4
IC16A
SCCLK_PCU <1>
IC16B
SCI_RST_PCU <1>
IC16D
TXD_IN_PCU <1>
IC16E
RXD_OUT_PCU <1>
C131
nm_1000pF
+3.3V
38mA
drive
Short-mode 60mA
R51 27J(1608)
R38 27J(1608)
PPD2_POW <1>
+3.3V
R201
4.7KJ
R194
4.7KJ
R202
1KJ
<1>
HPOS\
HPOS\(IO) <4>
<1,4>
OSMCHin\
OSMCHin\ <1,4>
C117
1000pF
IC16C
R80
4.7KJ
JOBEND_PCU <1>
C132
nm_1000pF
BR40
4.7KJX4
IC10A
LPHSTS_K <1>
IC10B
LPHSTS_C <1>
IC16F
LPHSTS_M <1>
IC32F
LPHSTS_Y <1>
BYPASS Cap.
C34
0.1uF
C45
0.1uF
C104
0.1uF
C91
0.1uF

PCU PWB (Motor Driver Section)

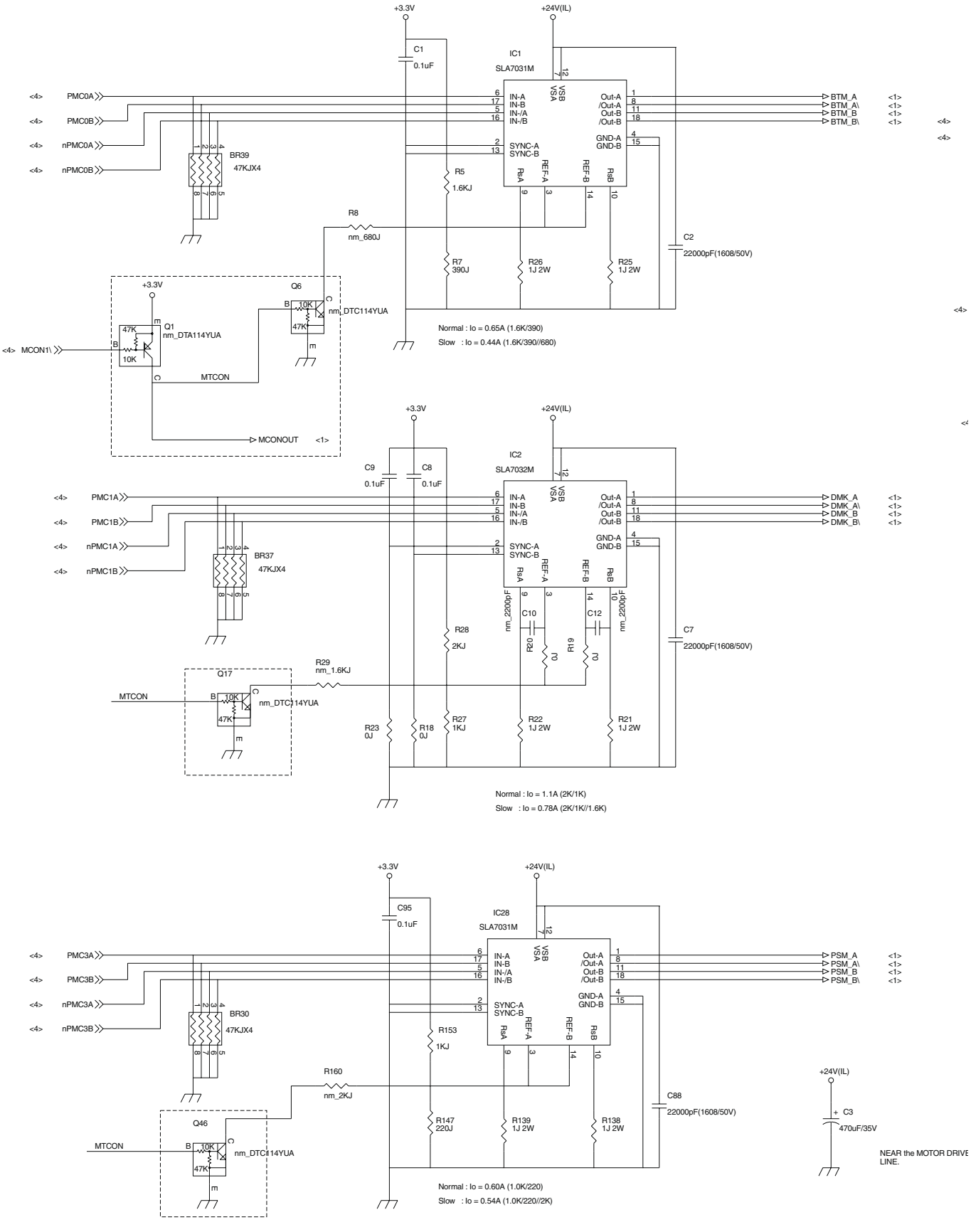

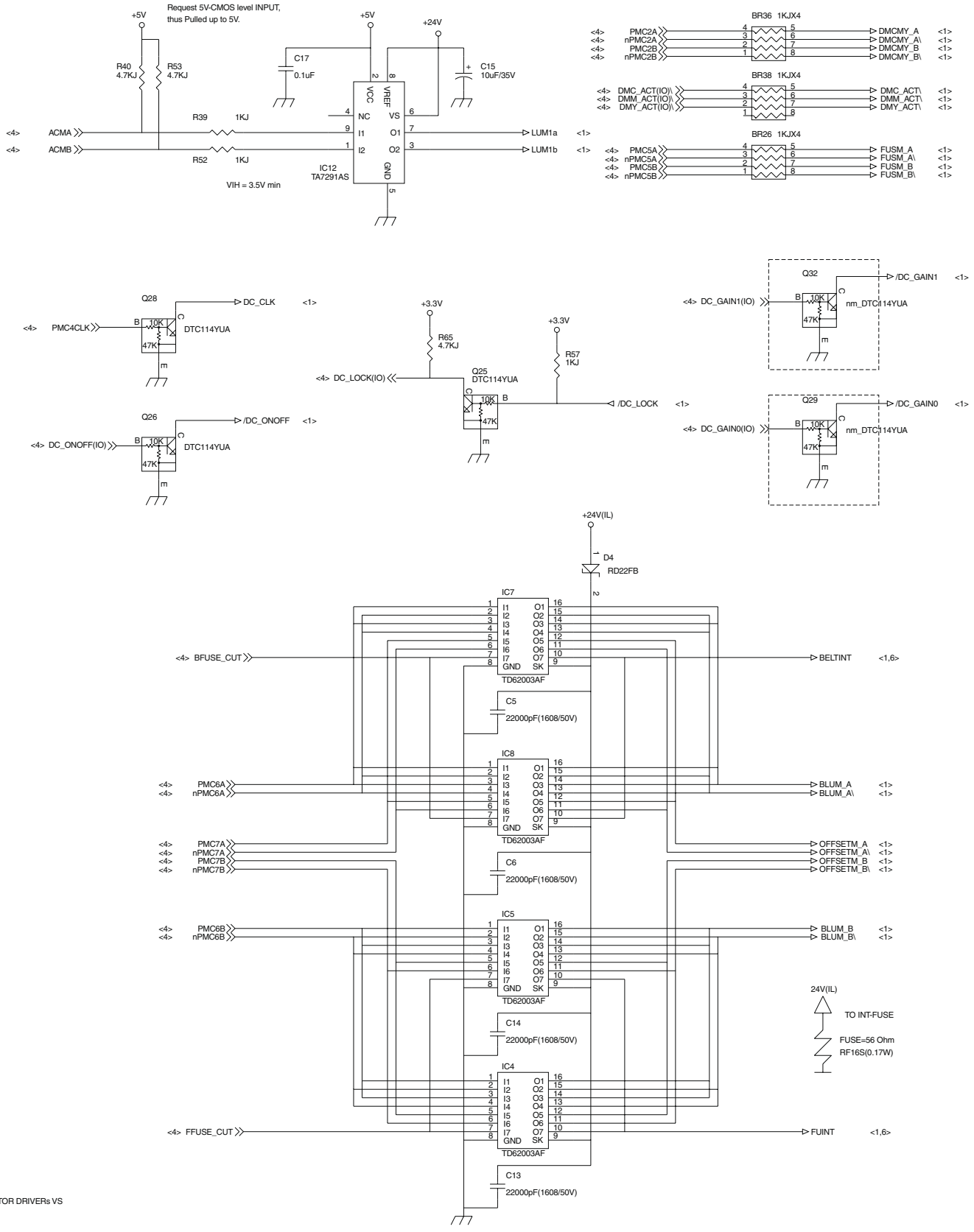

he MOTOR DRIVERs VS

PCU PWB

PARTS LAYOUT / 部品配置図

[PARTS SURFACE / 部品面**]**

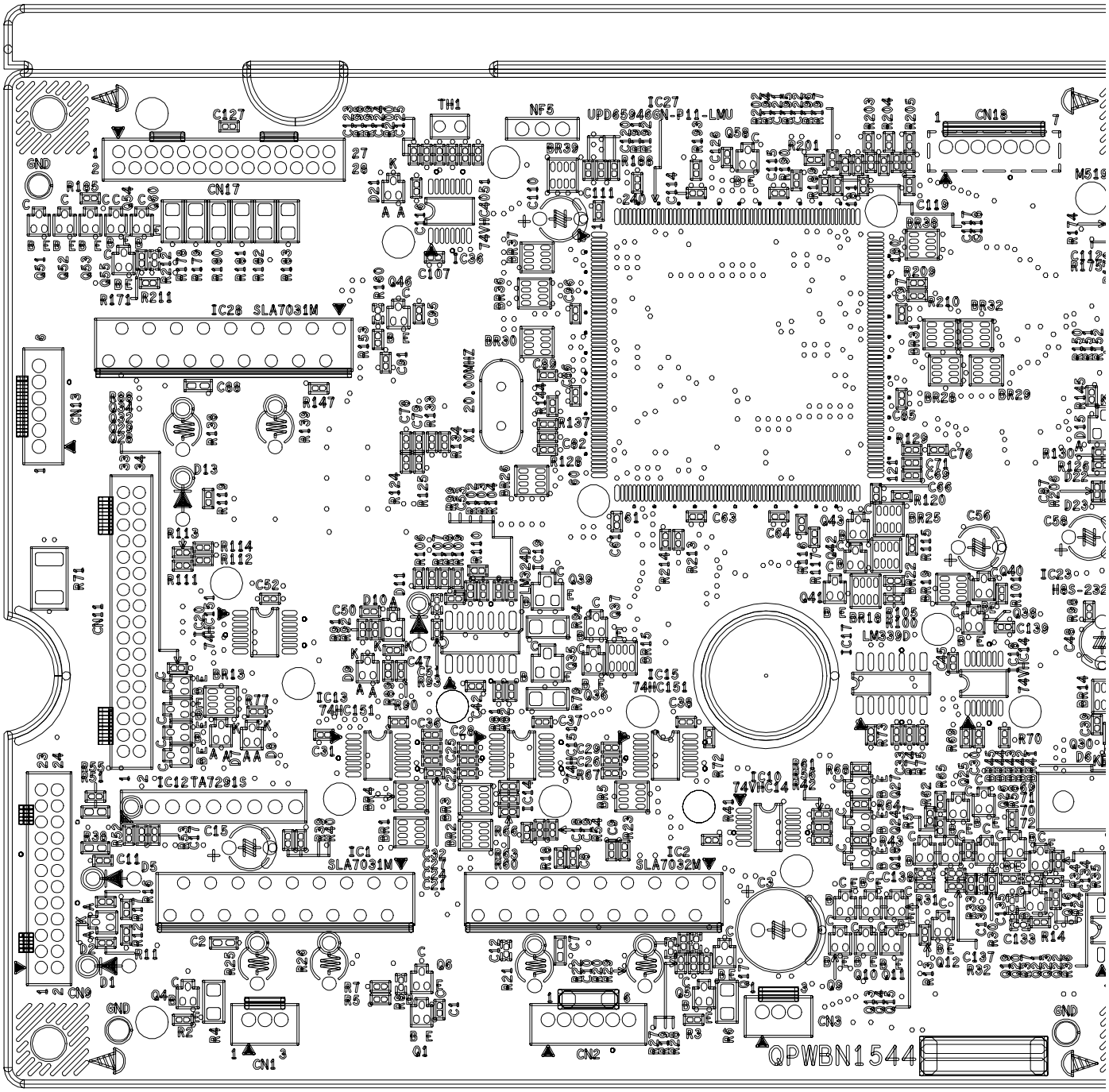

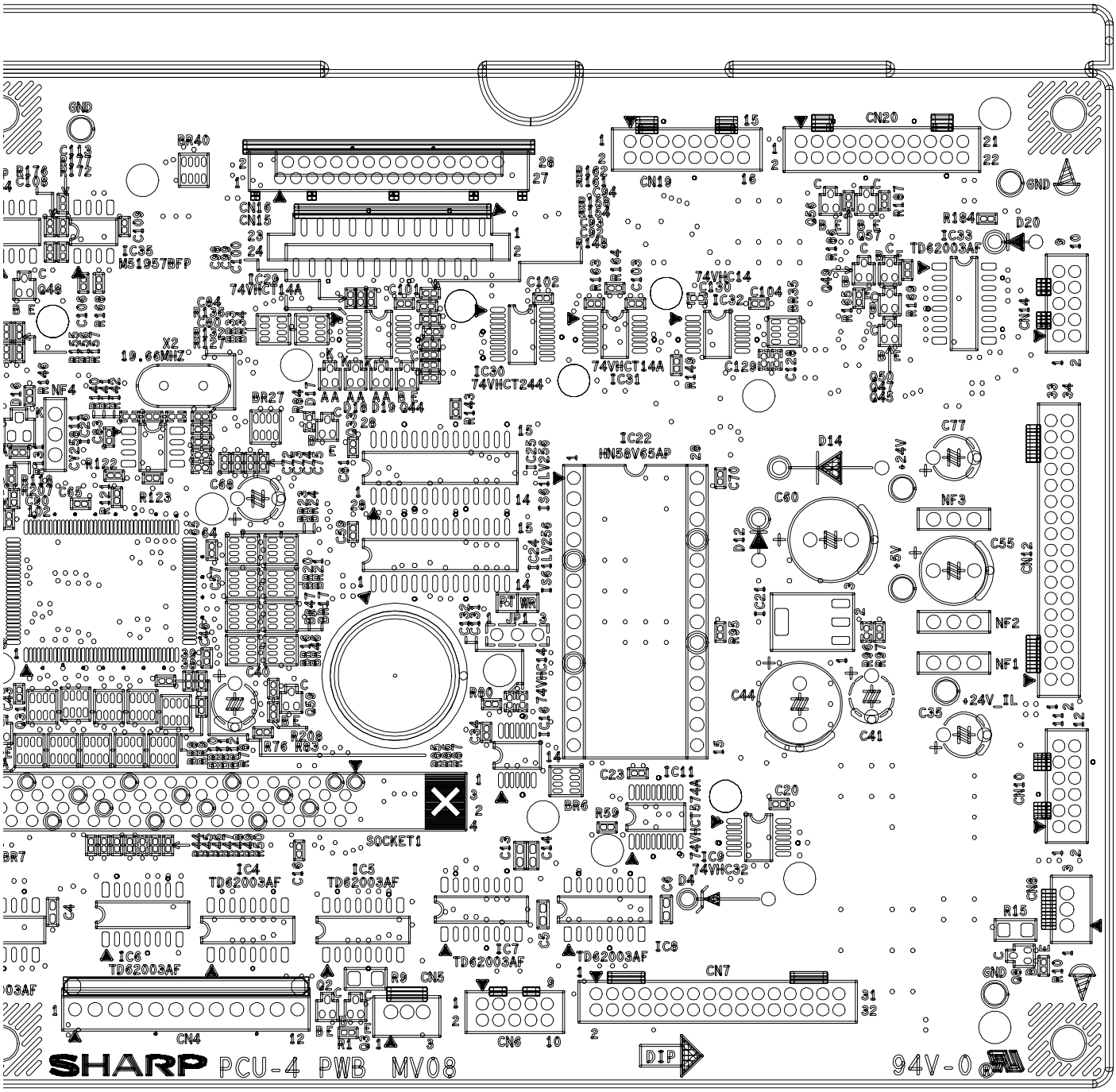
SHARP PCU-4 PWB MV08
94V-0
WHALE-PCU-4
PWB2008105C
IC22
HN58V65AP
IC30
74VHCT244
IC29
74VHCT14A
IC31
74VHCT14A
IC32
74VHC14
IC33
TD62003AF
IC35
M51957BFP
X2
19.66MHZ
SOCKET1
IC4
TD62003AF
IC5
TD62003AF
IC6
TD62003AF
IC7
TD62003AF
IC8
TD62003AF
IC9
74VHC32
IC11
74VHCT574A
IC16
74VHC14
IC24
IS61LV256
IC25
IS61LV256
IC21
IC6
TD62003AF
CN4
CN5
CN6
CN7
CN8
CN10
CN12
CN14
CN15
CN16
CN19
CN20
NF1
NF2
NF3
NF4
+24V
+5V
+24V_IL
GND
DIP

B. ICU PWB

ICU PWB (TOP)

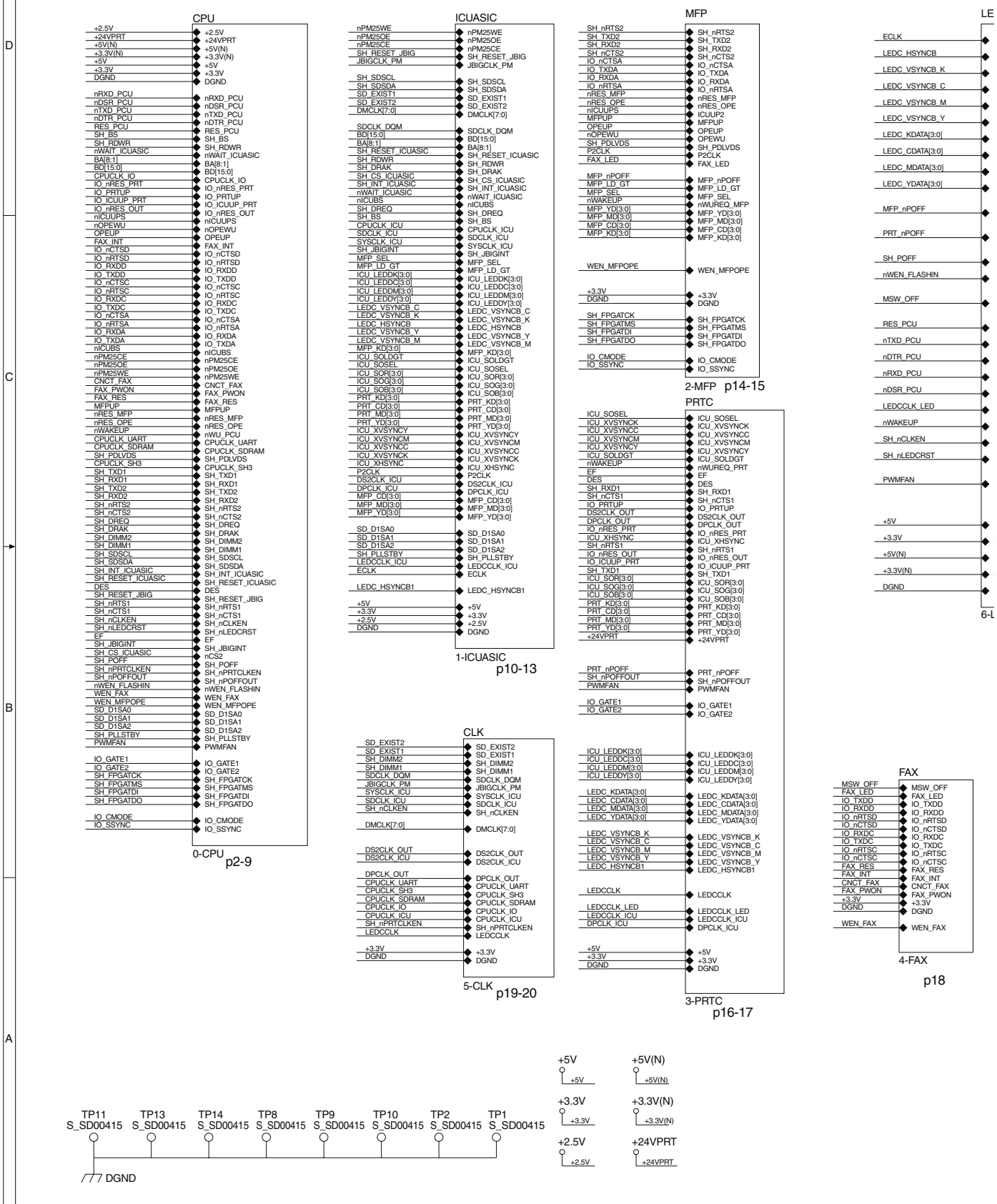

LED HEAD CTRL

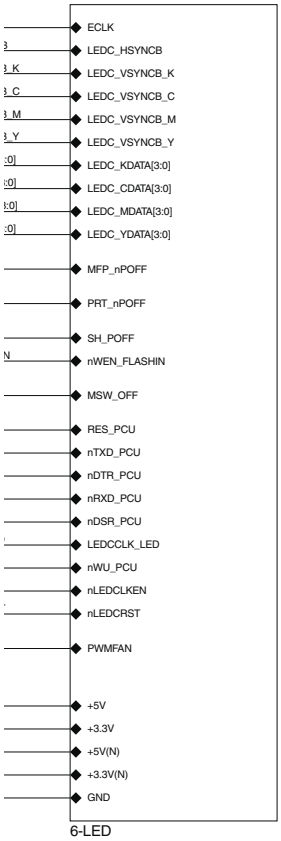

6-LED

p21-23

ICU PWB (CPU)

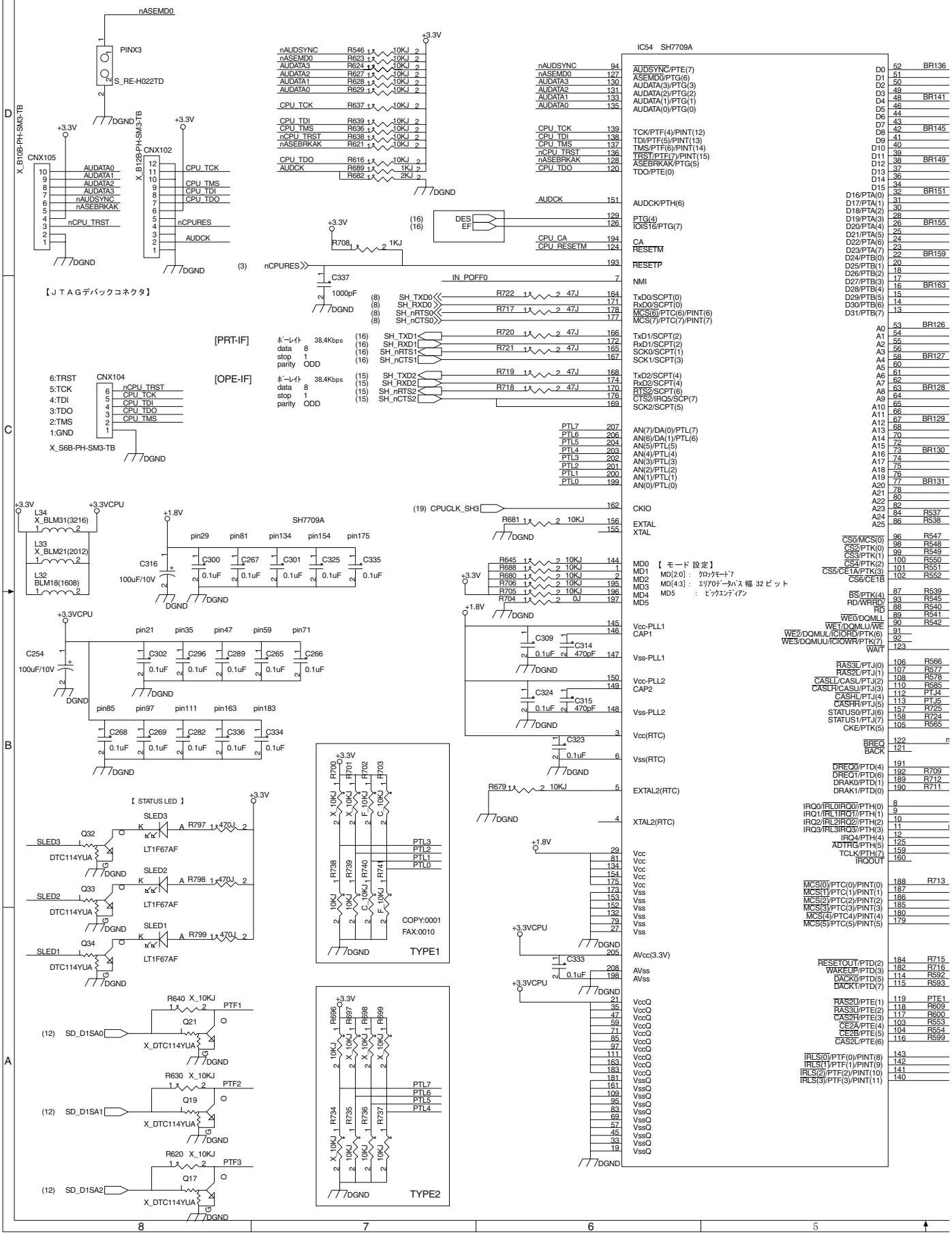
IC54 SH7709A
nASEMD0
PINX3
S_RE-H022TD
X_B10B-PH-SM3-TB
X_B12B-PH-SM3-TB
CNX105
CNX102
AUDATA0
AUDATA1
AUDATA2
AUDATA3
nAUDSYNC
nASEBRKAK
nCPU_TRST
CPU_TCK
CPU_TMS
CPU_TDI
CPU_TDO
nCPURES
AUDCK
【ＪＴＡＧデバックコネクタ】
C337
1000pF
IN_POFF0
SH_TXD0
SH_RXD0
SH_nRTS0
SH_nCTS0
[PRT-IF]
[OPE-IF]
ﾎﾞｰﾚｰﾄ 38.4Kbps
data 8
stop 1
parity ODD
SH_TXD1
SH_RXD1
SH_nRTS1
SH_nCTS1
SH_TXD2
SH_RXD2
SH_nRTS2
SH_nCTS2
CNX104
6:TRST
5:TCK
4:TDI
3:TDO
2:TMS
1:GND
X_S6B-PH-SM3-TB
DES
EF
CPU_CA
CPU_RESETM
RESETP
NMI
TxD0/SCPT(0)
RxD0/SCPT(0)
TxD1/SCPT(2)
RxD1/SCPT(2)
SCK0/SCPT(1)
SCK1/SCPT(3)
TxD2/SCPT(4)
RxD2/SCPT(4)
SCK2/SCPT(5)
AN(7)/DA(0)/PTL(7)
AN(6)/DA(1)/PTL(6)
AN(5)/PTL(5)
AN(4)/PTL(4)
AN(3)/PTL(3)
AN(2)/PTL(2)
AN(1)/PTL(1)
AN(0)/PTL(0)
CKIO
EXTAL
XTAL
MD0 【 モード 設定】
MD1 MD[2:0] : ｸﾛｯｸﾓｰﾄﾞ7
MD2
MD3 MD[4:3] : ｴﾘｱ0ﾃﾞｰﾀﾊﾞｽ 幅 32 ビット
MD4 MD5 : ﾋﾞｯｸｴﾝﾃﾞｨｱﾝ
MD5
Vcc-PLL1
CAP1
Vss-PLL1
Vcc-PLL2
CAP2
Vss-PLL2
Vcc(RTC)
Vss(RTC)
EXTAL2(RTC)
XTAL2(RTC)
Vcc
Vss
AVcc(3.3V)
AVss
VccQ
VssQ
WE1/DQMLU/WE
WE2/DQMUL/ICIORD/PTK(6)
WE3/DQMUU/ICIOWR/PTK(7)
WAIT
RAS3L/PTJ(0)
RAS2L/PTJ(1)
CASLL/CASL/PTJ(2)
CASLH/CASU/PTJ(3)
CASHL/PTJ(4)
CASHH/PTJ(5)
STATUS0/PTJ(6)
STATUS1/PTJ(7)
CKE/PTK(5)
BREQ
BACK
DREQ0/PTD(4)
DREQ1/PTD(6)
DRAK0/PTD(1)
DRAK1/PTD(0)
IRQ0/IRL0/IRQ0/PTH(0)
IRQ1/IRL1/IRQ1/PTH(1)
IRQ2/IRL2/IRQ2/PTH(2)
IRQ3/IRL3/IRQ3/PTH(3)
IRQ4/PTH(4)
ADTRG/PTH(5)
TCLK/PTH(7)
IRQOUT
MCS(0)/PTC(0)/PINT(0)
MCS(1)/PTC(1)/PINT(1)
MCS(2)/PTC(2)/PINT(2)
MCS(3)/PTC(3)/PINT(3)
MCS(4)/PTC4)/PINT(4)
MCS(5)/PTC(5)/PINT(5)
RESETOUT/PTD(2)
WAKEUP/PTD(3)
DACK0/PTD(5)
DACK1/PTD(7)
RAS2U/PTE(1)
RAS3U/PTE(2)
CAS2H/PTE(3)
CE2A/PTE(4)
CE2B/PTE(5)
CAS2L/PTE(6)
IRLS(0)/PTF(0)/PINT(8)
IRLS(1)/PTF(1)/PINT(9)
IRLS(2)/PTF(2)/PINT(10)
IRLS(3)/PTF(3)/PINT(11)
【 STATUS LED 】
SLED3
SLED2
SLED1
LT1F67AF
DTC114YUA
TYPE1
TYPE2
COPY:0001
FAX:0010
PTL3
PTL2
PTL1
PTL0
PTL7
PTL6
PTL5
PTL4
PTF1
PTF2
PTF3
SD_D1SA0
SD_D1SA1
SD_D1SA2
X_DTC114YUA
SH7709A
pin29 pin81 pin134 pin154 pin175
pin21 pin35 pin47 pin59 pin71
pin85 pin97 pin111 pin163 pin183
L34 X_BLM31(3216)
L33 X_BLM21(2012)
L32 BLM18(1608)
+3.3V
+3.3VCPU
+1.8V
DGND

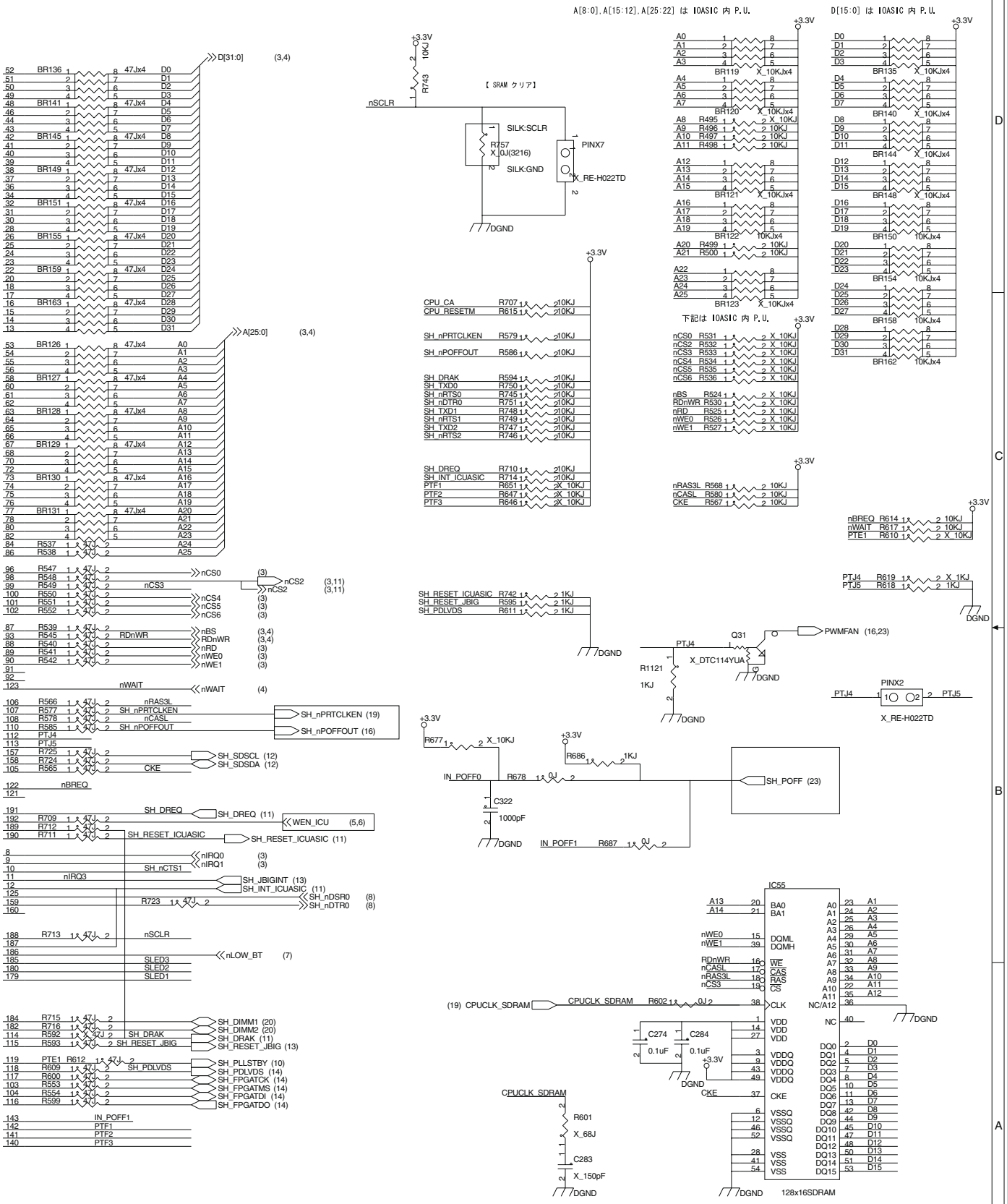
A[8:0],A[15:12],A[25:22] は IOASIC 内 P.U.
D[15:0] は IOASIC 内 P.U.
下記は IOASIC 内 P.U.
【 SRAM クリア】
D[31:0] (3,4)
A[25:0] (3,4)
nSCLR
SILK:SCLR
SILK:GND
PINX7
X_RE-H022TD
DGND
+3.3V
CPU_CA
CPU_RESETM
SH_nPRTCLKEN
SH_nPOFFOUT
SH_DRAK
SH_TXD0
SH_nRTS0
SH_nDTR0
SH_TXD1
SH_nRTS1
SH_TXD2
SH_nRTS2
SH_DREQ
SH_INT_ICUASIC
PTF1
PTF2
PTF3
nCS0
nCS2
nCS3
nCS4
nCS5
nCS6
nBS
RDnWR
nRD
nWE0
nWE1
nWAIT
nRAS3L
nCASL
CKE
nBREQ
PTJ4
PTJ5
SH_RESET_ICUASIC
SH_RESET_JBIG
SH_PDLVDS
Q31
PWMFAN (16,23)
X_DTC114YUA
PINX2
SH_POFF (23)
IN_POFF0
IN_POFF1
SH_SDSCL (12)
SH_SDSDA (12)
SH_DREQ (11)
WEN_ICU (5,6)
SH_RESET_ICUASIC (11)
nIRQ0
nIRQ1
SH_nCTS1
nIRQ3
SH_JBIGINT (13)
SH_INT_ICUASIC (11)
SH_nDSR0 (8)
SH_nDTR0 (8)
nLOW_BT (7)
SLED3
SLED2
SLED1
SH_DIMM1 (20)
SH_DIMM2 (20)
SH_DRAK (11)
SH_RESET_JBIG (13)
SH_PLLSTBY (10)
SH_PDLVDS (14)
SH_FPGATCK (14)
SH_FPGATMS (14)
SH_FPGATDI (14)
SH_FPGATDO (14)
(19) CPUCLK_SDRAM
CPUCLK_SDRAM
IC55
128x16SDRAM

ICU PWB (IOASIC)

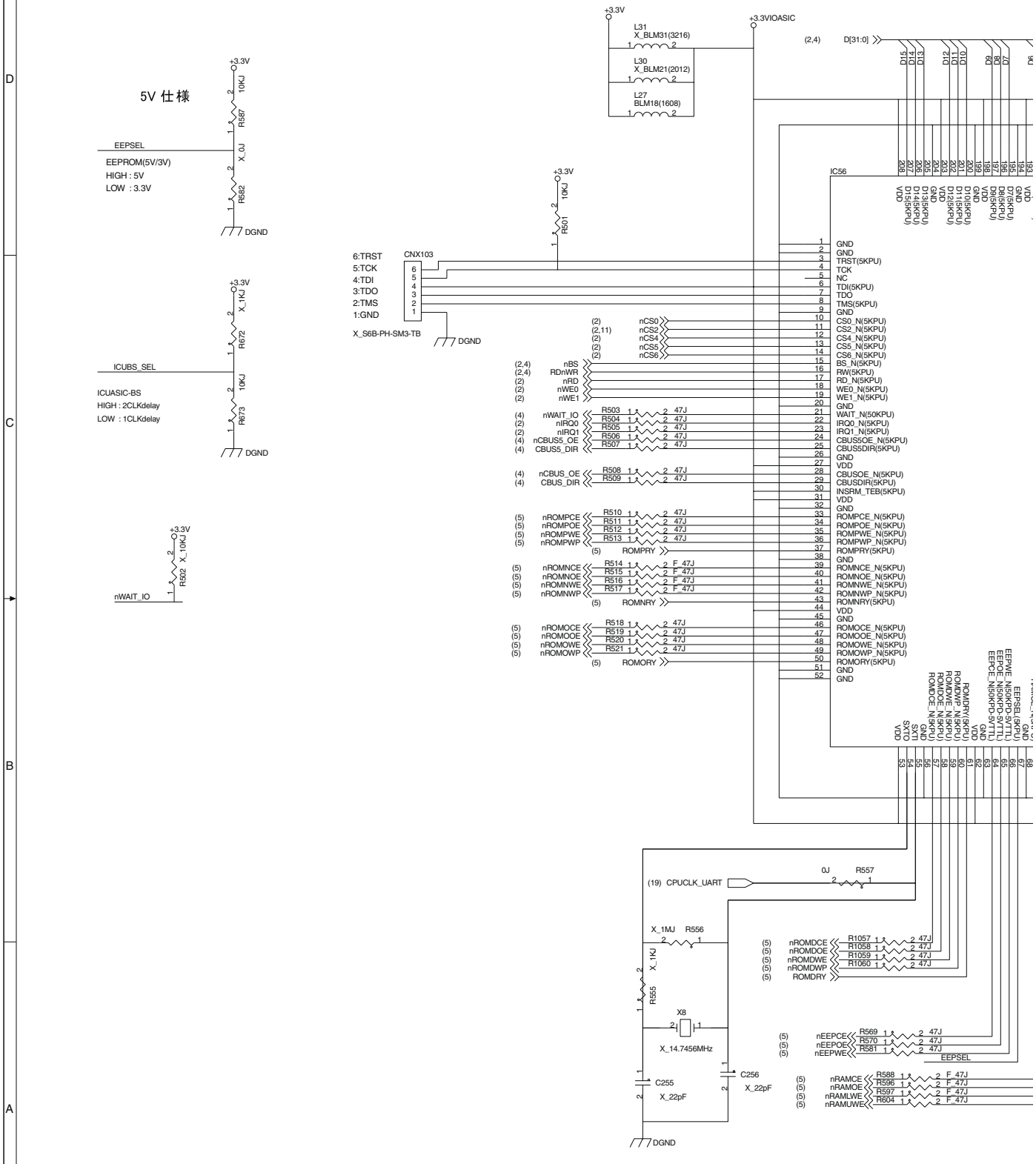

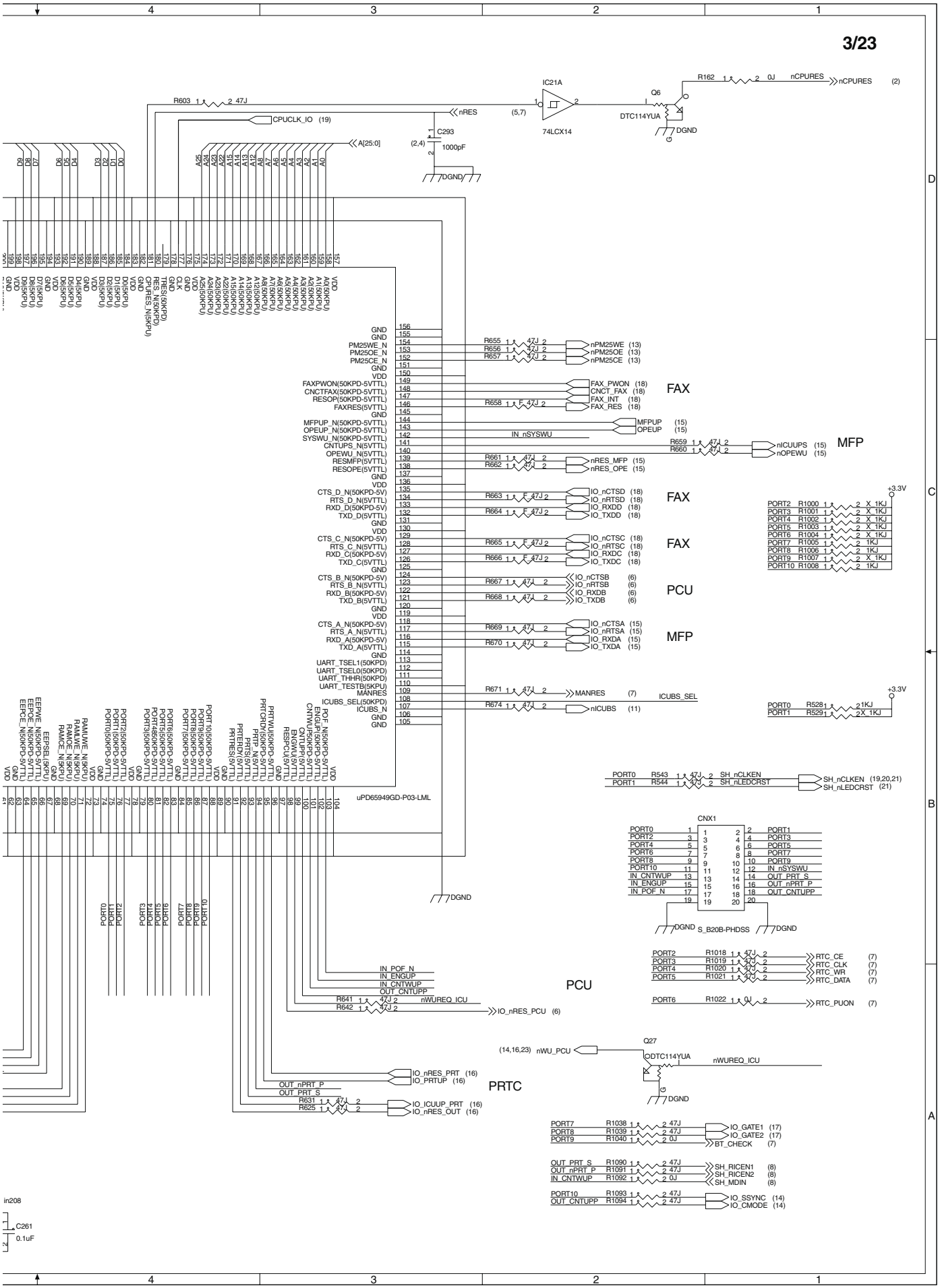
3/23
IC21A
74LCX14
Q6
DTC114YUA
R162 0J nCPURES
nCPURES (2)
R603 47J
nRES (5,7)
CPUCLK_IO (19)
C293 1000pF
DGND
A[25:0]
D[9:0]
uPD65949GD-P03-LML
FAX
MFP
PCU
PRTC
nPM25WE (13)
nPM25OE (13)
nPM25CE (13)
FAX_PWON (18)
CNCT_FAX (18)
FAX_INT (18)
FAX_RES (18)
MFPUP (15)
OPEUP (15)
IN_nSYSWU
nICUUPS (15)
nOPEWU (15)
nRES_MFP (15)
nRES_OPE (15)
IO_nCTSD (18)
IO_nRTSD (18)
IO_RXDD (18)
IO_TXDD (18)
IO_nCTSC (18)
IO_nRTSC (18)
IO_RXDC (18)
IO_TXDC (18)
IO_nCTSB (6)
IO_nRTSB (6)
IO_RXDB (6)
IO_TXDB (6)
IO_nCTSA (15)
IO_nRTSA (15)
IO_RXDA (15)
IO_TXDA (15)
MANRES (7)
ICUBS_SEL
nICUBS (11)
+3.3V
PORT2 R1000 2.X 1KJ
PORT3 R1001 2.X 1KJ
PORT4 R1002 2.X 1KJ
PORT5 R1003 2.X 1KJ
PORT6 R1004 2.X 1KJ
PORT7 R1005 2 1KJ
PORT8 R1006 2 1KJ
PORT9 R1007 2.X 1KJ
PORT10 R1008 2 1KJ
PORT0 R528 2.1KJ
PORT1 R529 2.X 1KJ
SH_nCLKEN (19,20,21)
SH_nLEDCRST (21)
CNX1
S_B20B-PHDSS
RTC_CE (7)
RTC_CLK (7)
RTC_WR (7)
RTC_DATA (7)
RTC_PUON (7)
nWU_PCU (14,16,23)
nWUREQ_ICU
IO_nRES_PCU (6)
IO_nRES_PRT (16)
IO_PRTUP (16)
IO_ICUUP_PRT (16)
IO_nRES_OUT (16)
IO_GATE1 (17)
IO_GATE2 (17)
BT_CHECK (7)
SH_RICEN1 (8)
SH_RICEN2 (8)
SH_MDIN (8)
IO_SSYNC (14)
IO_CMODE (14)
in208
C261 0.1uF

ICU PWB (CPUBUS)

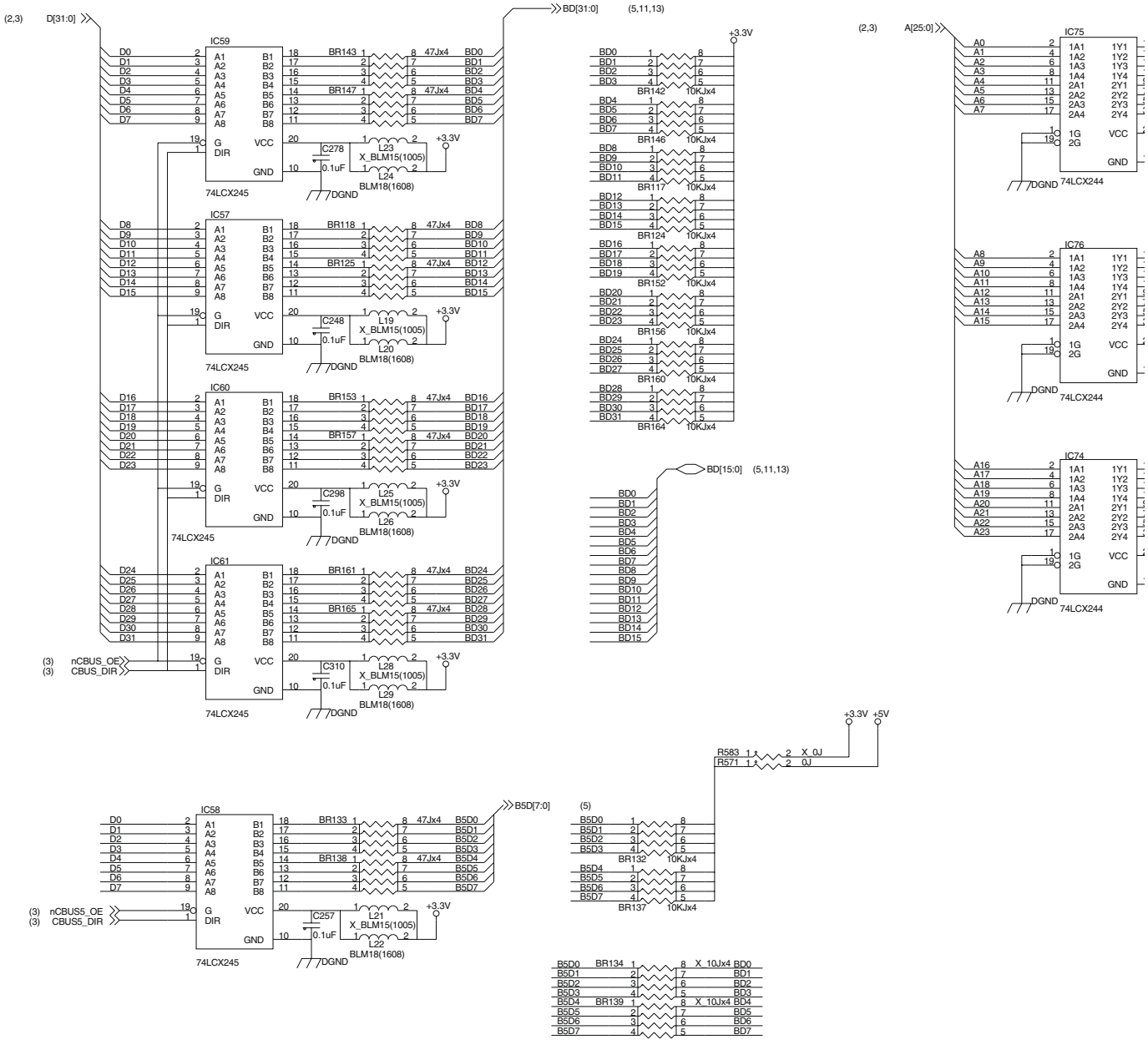

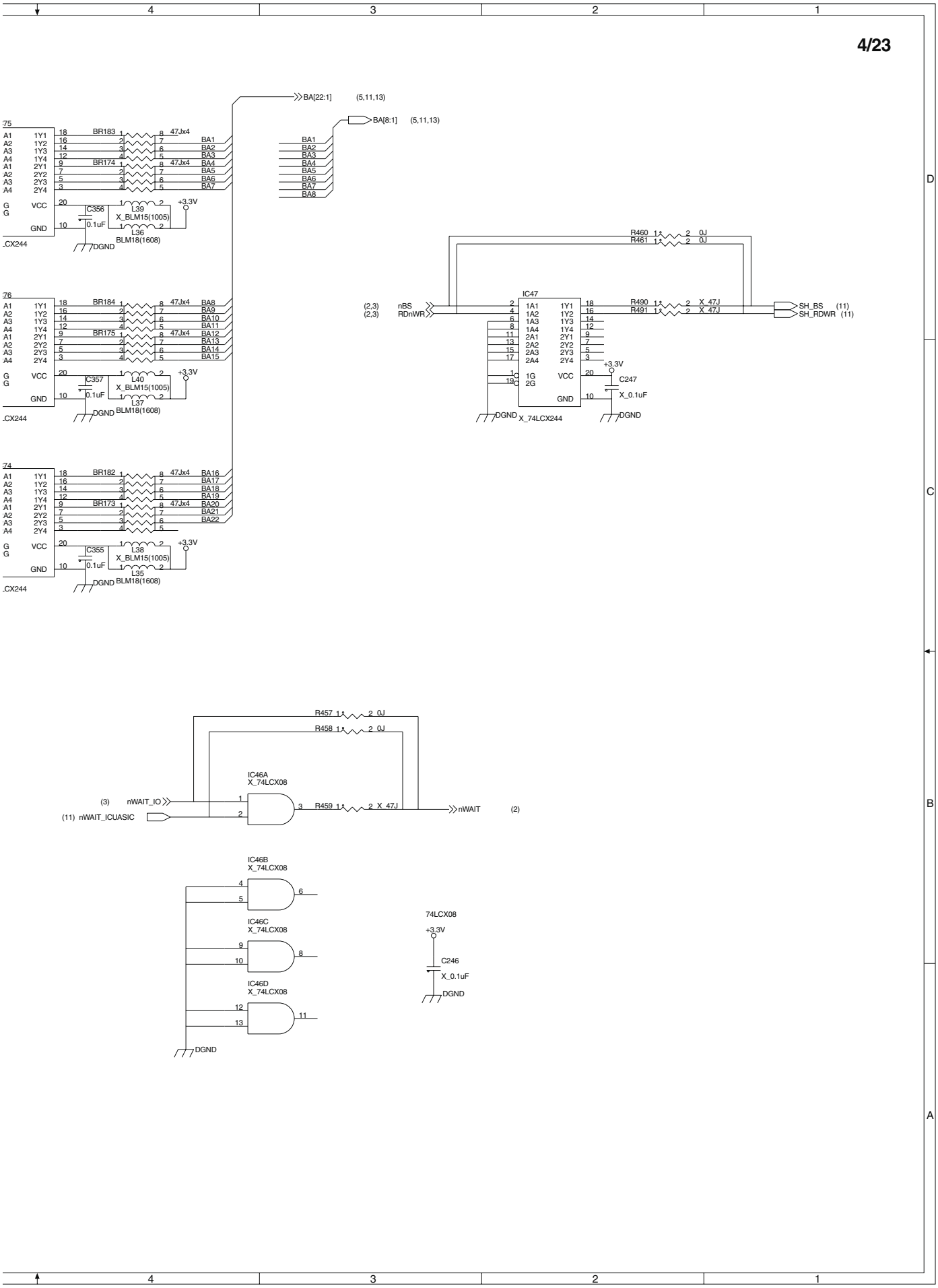
BA[22:1] (5,11,13)
BA[8:1] (5,11,13)
BR183 47Jx4
BR174 47Jx4
BR184 47Jx4
BR175 47Jx4
BR182 47Jx4
BR173 47Jx4
C356 0.1uF
L39 X_BLM15(1005)
L36 BLM18(1608)
C357 0.1uF
L40 X_BLM15(1005)
L37 BLM18(1608)
C355 0.1uF
L38 X_BLM15(1005)
L35 BLM18(1608)
+3.3V
DGND
IC47
X_74LCX244
(2,3) nBS
(2,3) RDnWR
R460 0J
R461 0J
R490 X_47J
R491 X_47J
SH_BS (11)
SH_RDWR (11)
C247 X_0.1uF
R457 0J
R458 0J
R459 X_47J
IC46A X_74LCX08
(3) nWAIT_IO
(11) nWAIT_ICUASIC
nWAIT (2)
IC46B X_74LCX08
IC46C X_74LCX08
IC46D X_74LCX08
74LCX08
C246 X_0.1uF

ICU PWB (MEM)

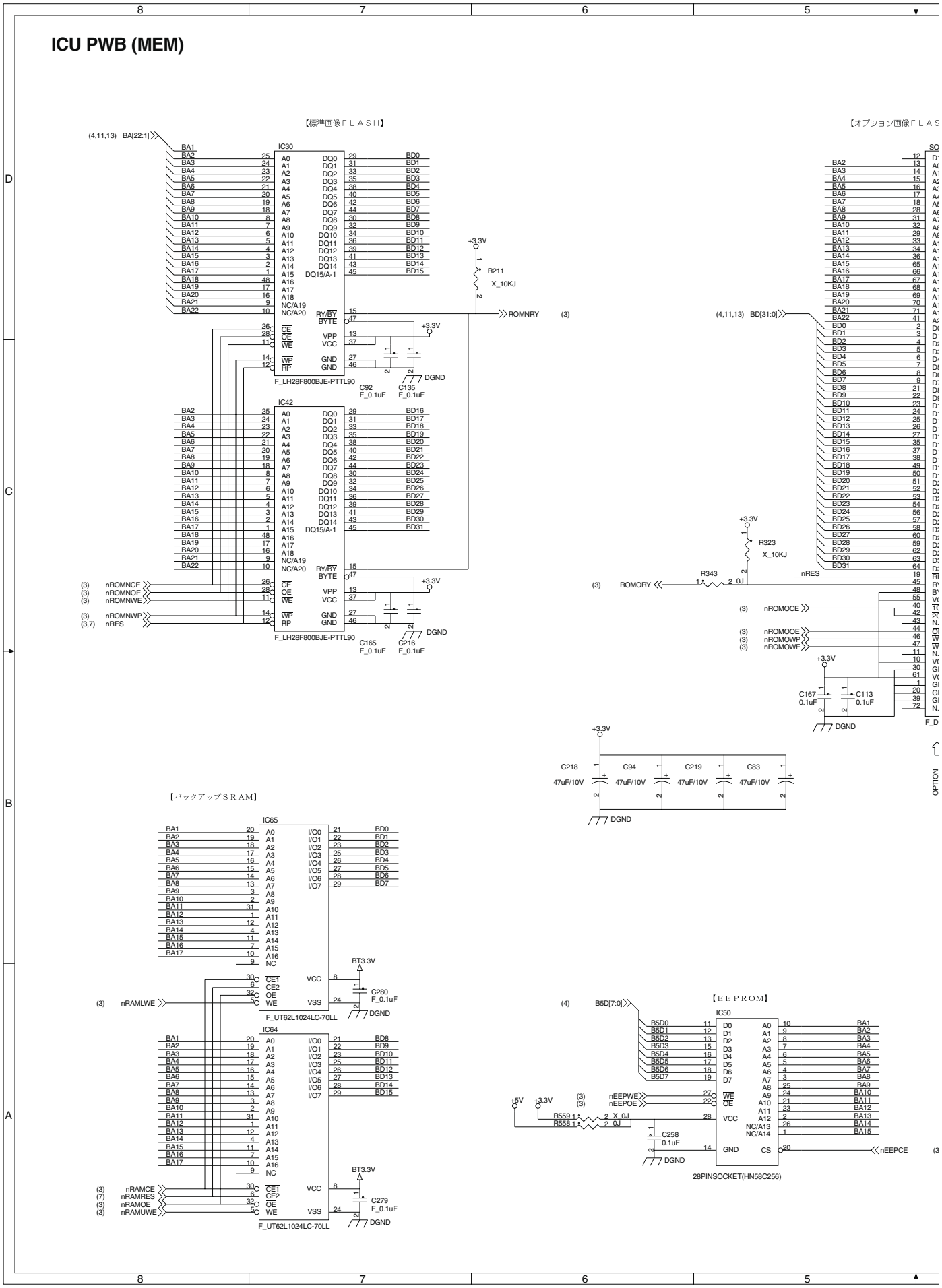

【標準画像ＦＬＡＳＨ】
【オプション画像ＦＬＡＳ
【バックアップＳＲＡＭ】
【ＥＥＰＲＯＭ】
IC30
IC42
IC65
IC64
IC50
F_LH28F800BJE-PTTL90
F_UT62L1024LC-70LL
28PINSOCKET(HN58C256)
(4,11,13) BA[22:1]
(4,11,13) BD[31:0]
(3) nROMNCE
(3) nROMNOE
(3) nROMNWE
(3) nROMNWP
(3,7) nRES
(3) nRAMLWE
(3) nRAMCE
(7) nRAMRES
(3) nRAMOE
(3) nRAMUWE
(4) B5D[7:0]
(3) nEEPWE
(3) nEEPOE
(3) nEEPCE
(3) nROMOCE
(3) nROMOOE
(3) nROMOWP
(3) nROMOWE
(3) ROMORY
(3) ROMNRY
R211 X_10KJ
R323 X_10KJ
R343 0J
R559 X_0J
R558 0J
C92 F_0.1uF
C135 F_0.1uF
C165 F_0.1uF
C216 F_0.1uF
C167 0.1uF
C113 0.1uF
C218 47uF/10V
C94 47uF/10V
C219 47uF/10V
C83 47uF/10V
C280 F_0.1uF
C279 F_0.1uF
C258 0.1uF
BT3.3V
+3.3V
+5V
DGND
OPTION

ョン画像ＦＬＡＳＨ】

【プログラムＦＬＡＳＨ】

[DOWNLOAD FLASH]

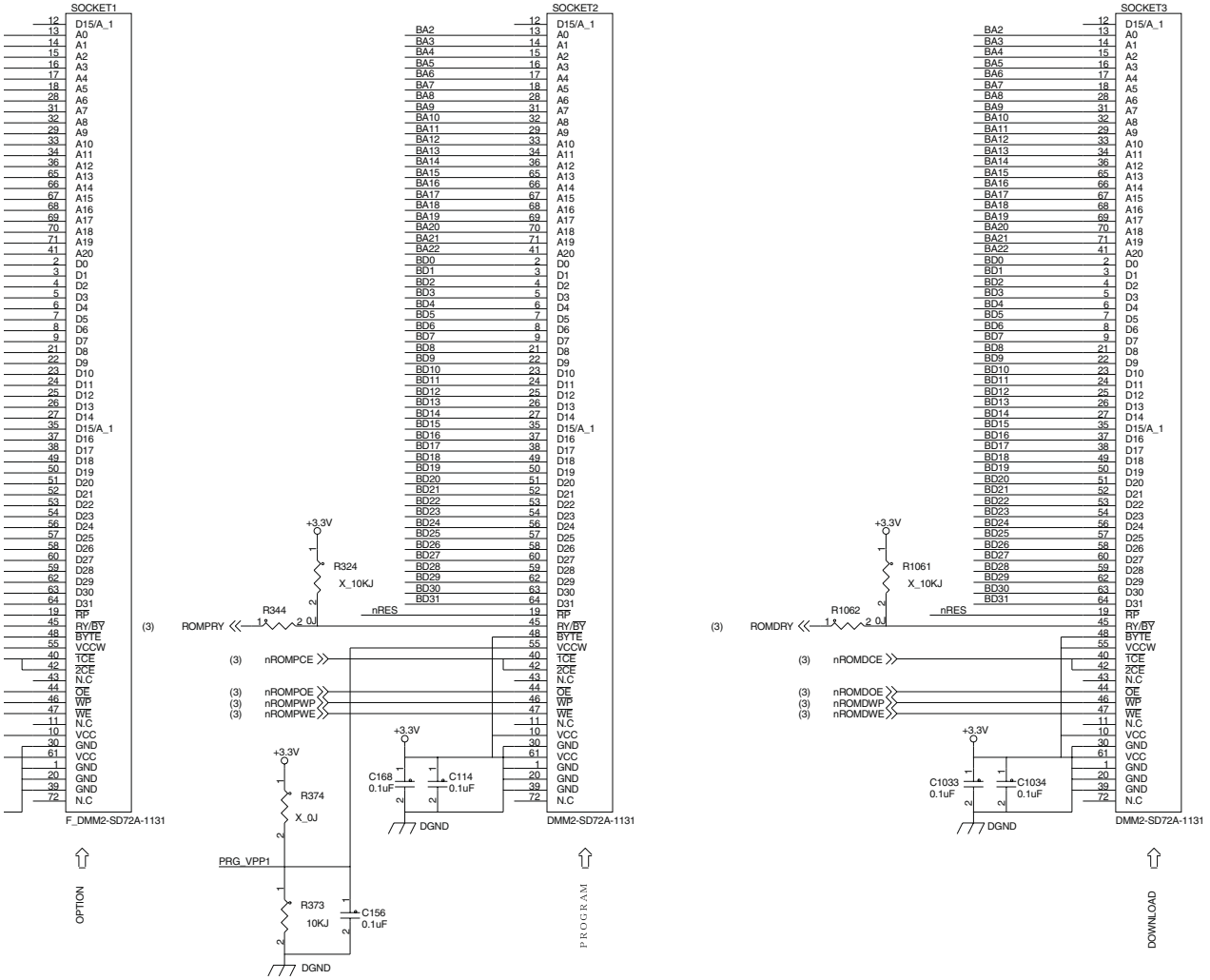

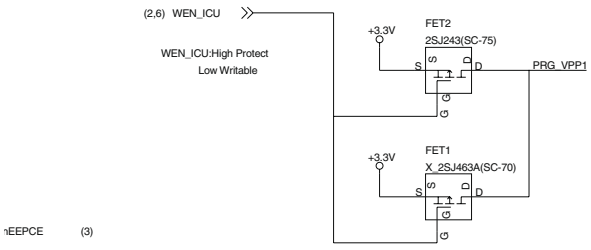

ICU PWB (PCU I/F)

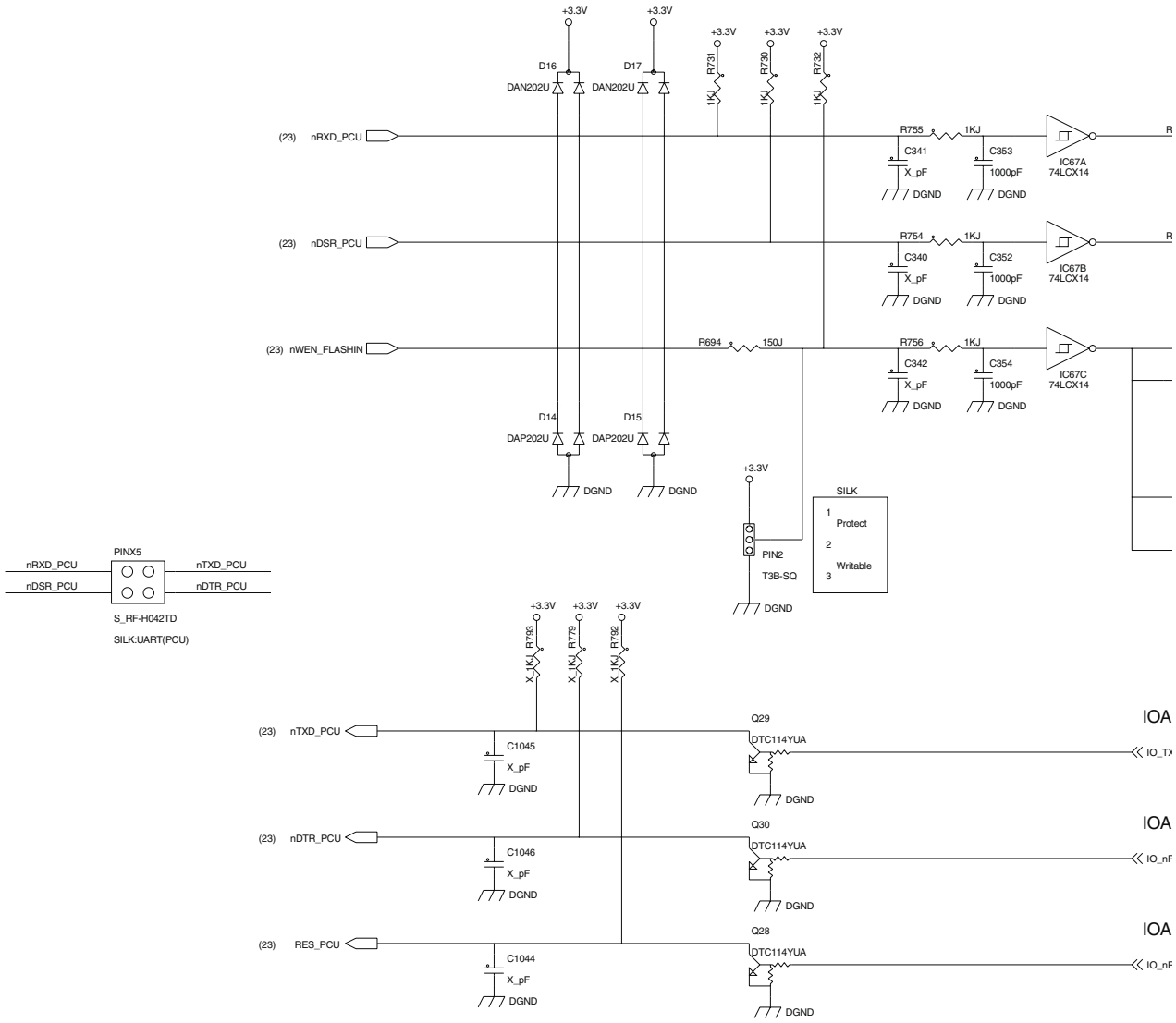

IOASIC

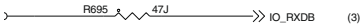

IOASIC

IOASIC

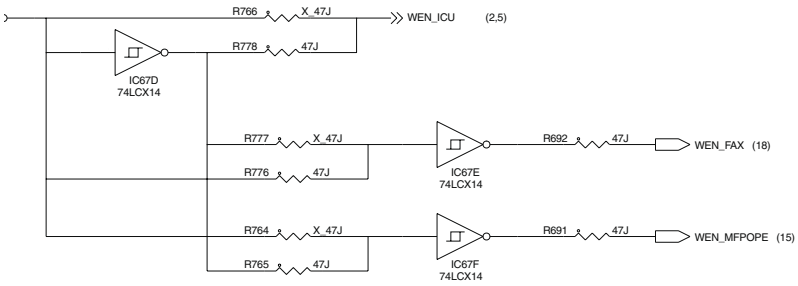

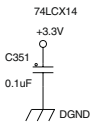

IOASIC

IOASIC

IOASIC

ICU PWB (BAT & RESET & RTC)

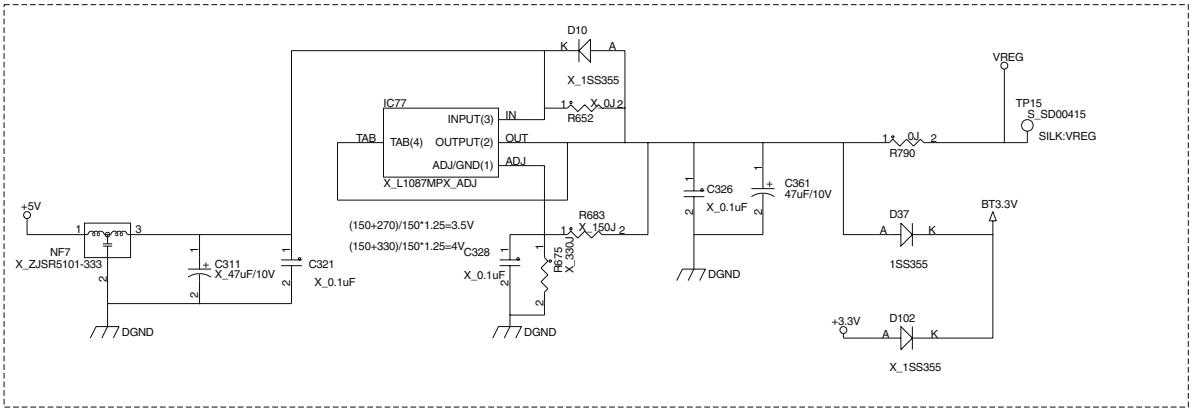

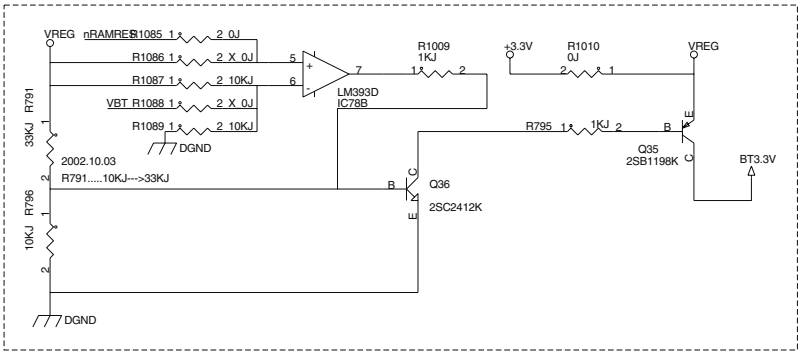

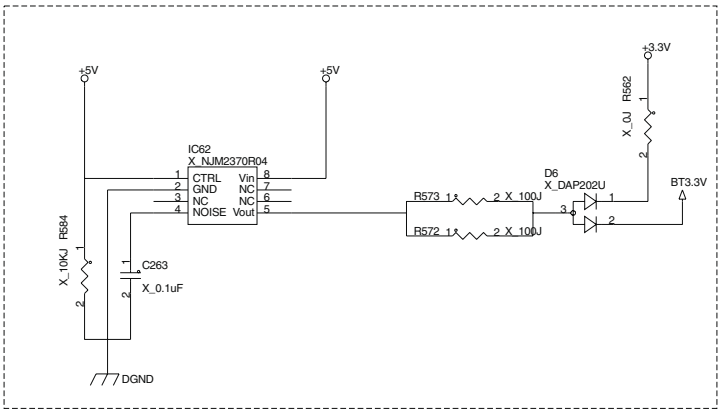

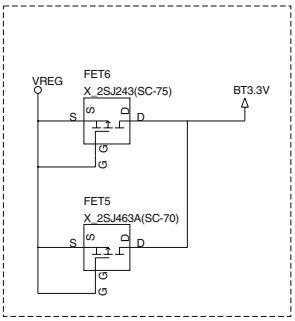

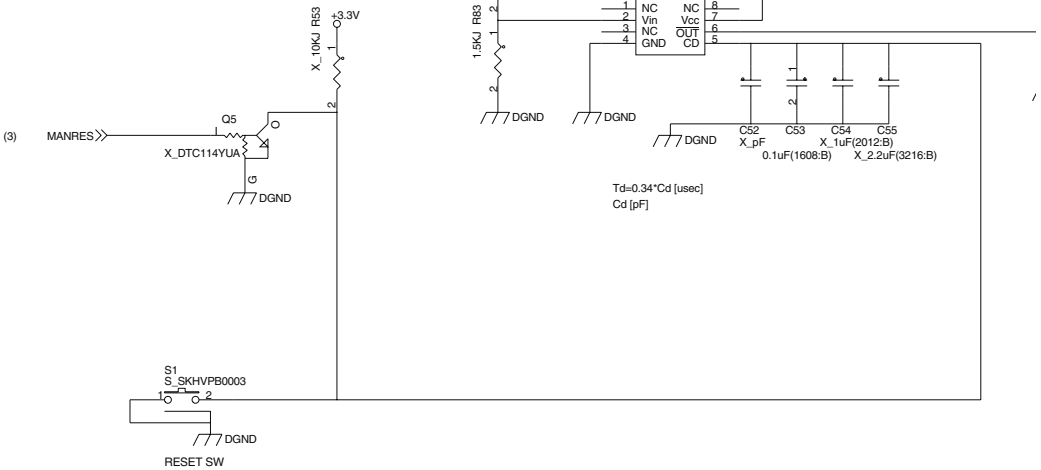

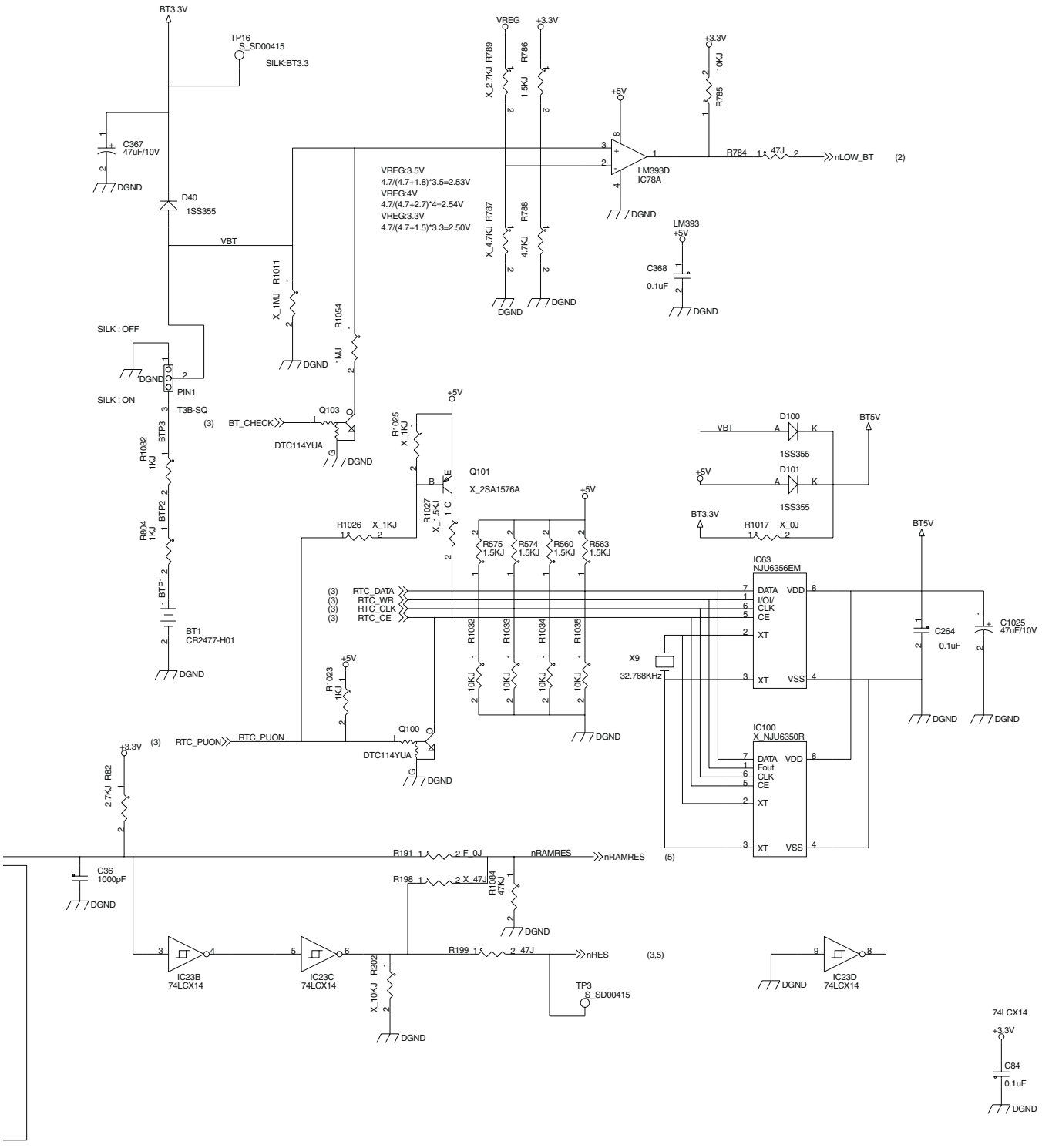
BT3.3V
TP16
S_SD00415
SILK:BT3.3
C367
47uF/10V
DGND
D40
1SS355
VBT
SILK : OFF
SILK : ON
PIN1
T3B-SQ
BTP3
BTP2
BTP1
R1062
1KJ
R804
1KJ
BT1
CR2477-H01
R1011
X_1MJ
R1054
1MJ
VREG
+3.3V
R789
X_2.7KJ
R786
1.5KJ
R787
X_4.7KJ
R788
4.7KJ
VREG:3.5V
4.7/(4.7+1.8)*3.5=2.53V
VREG:4V
4.7/(4.7+2.7)*4=2.54V
VREG:3.3V
4.7/(4.7+1.5)*3.3=2.50V
+5V
LM393D
IC78A
R784
47J
nLOW_BT
(2)
R785
10KJ
LM393
C368
0.1uF
BT_CHECK
(3)
Q103
DTC114YUA
R1025
X_1KJ
Q101
X_2SA1576A
R1027
X_1.5KJ
R1026
X_1KJ
R575
1.5KJ
R574
1.5KJ
R560
1.5KJ
R563
1.5KJ
D100
1SS355
D101
1SS355
BT5V
R1017
X_0J
RTC_DATA
RTC_WR
RTC_CLK
RTC_CE
IC63
NJU6356EM
DATA
I/O
CLK
CE
XT
VDD
VSS
X9
32.768KHz
C264
0.1uF
C1025
47uF/10V
R1032
R1033
R1034
R1035
10KJ
R1023
1KJ
RTC_PUON
Q100
DTC114YUA
IC100
X_NJU6350R
Fout
R82
2.7KJ
C36
1000pF
R191
F_0J
nRAMRES
(5)
R198
X_47J
R1084
47KJ
R199
47J
nRES
(3,5)
R202
X_10KJ
IC23B
74LCX14
IC23C
74LCX14
IC23D
74LCX14
TP3
S_SD00415
C84
0.1uF

ICU PWB (RIC)

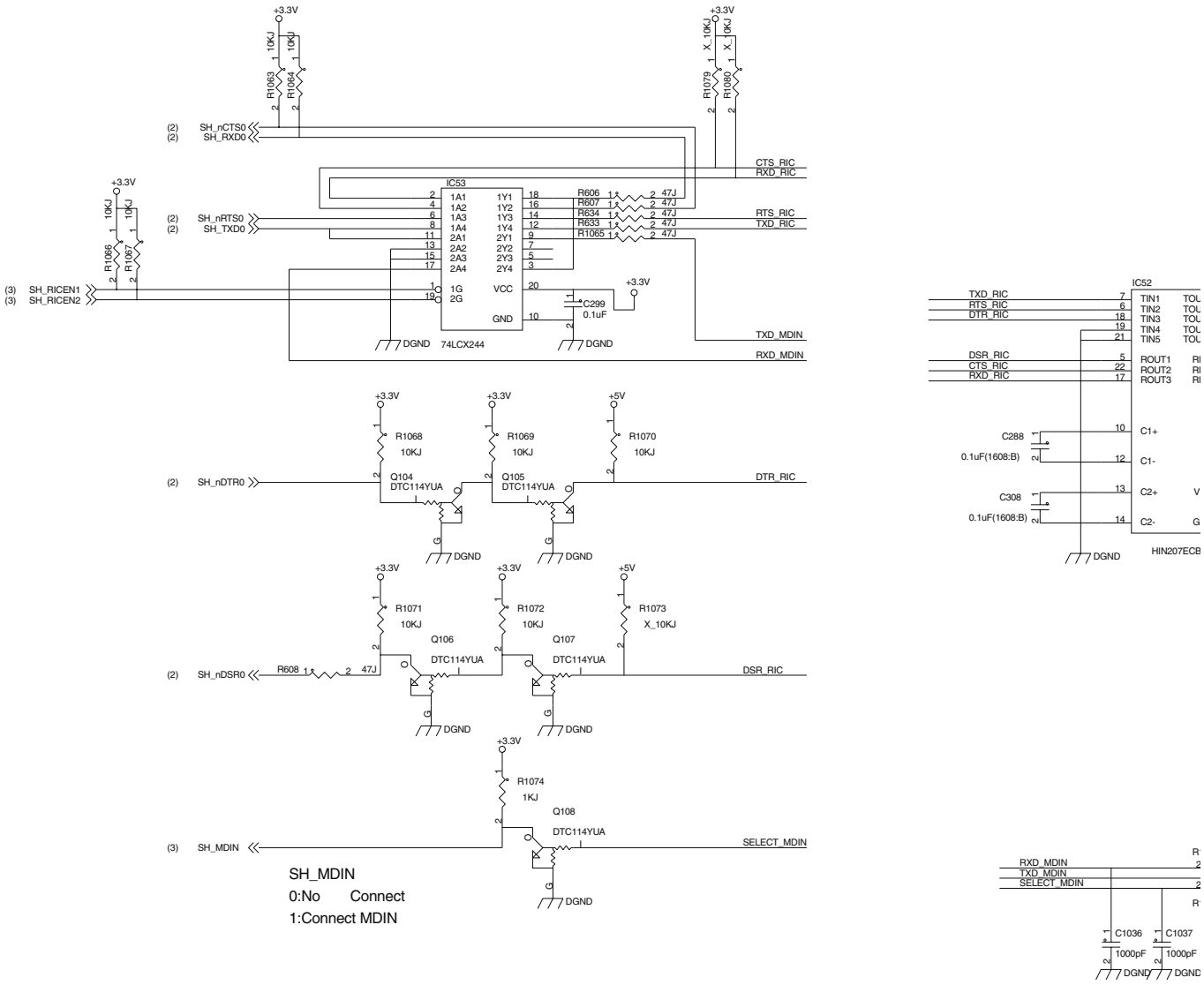
+3.3V
R1063 10KJ
R1064 10KJ
(2) SH_nCTS0
(2) SH_RXD0
R1079 X_10KJ
R1080 X_10KJ
CTS_RIC
RXD_RIC
IC53
R1066 10KJ
R1067 10KJ
(2) SH_nRTS0
(2) SH_TXD0
(3) SH_RICEN1
(3) SH_RICEN2
1A1 1A2 1A3 1A4 2A1 2A2 2A3 2A4
1Y1 1Y2 1Y3 1Y4 2Y1 2Y2 2Y3 2Y4
1G 2G
VCC GND
R606 47J
R607 47J
R634 47J
R633 47J
R1065 47J
RTS_RIC
TXD_RIC
C299 0.1uF
DGND
74LCX244
TXD_MDIN
RXD_MDIN
R1068 10KJ
R1069 10KJ
R1070 10KJ
+5V
Q104 DTC114YUA
Q105 DTC114YUA
(2) SH_nDTR0
DTR_RIC
R1071 10KJ
R1072 10KJ
R1073 X_10KJ
Q106 DTC114YUA
Q107 DTC114YUA
R608 47J
(2) SH_nDSR0
DSR_RIC
R1074 1KJ
Q108 DTC114YUA
(3) SH_MDIN
SELECT_MDIN
SH_MDIN
0:No Connect
1:Connect MDIN
IC52
TXD_RIC
RTS_RIC
DTR_RIC
DSR_RIC
CTS_RIC
RXD_RIC
TIN1 TIN2 TIN3 TIN4 TIN5
ROUT1 ROUT2 ROUT3
C288 0.1uF(1608:B)
C308 0.1uF(1608:B)
C1+ C1- C2+ C2-
HIN207ECB
RXD_MDIN
TXD_MDIN
SELECT_MDIN
C1036 1000pF
C1037 1000pF

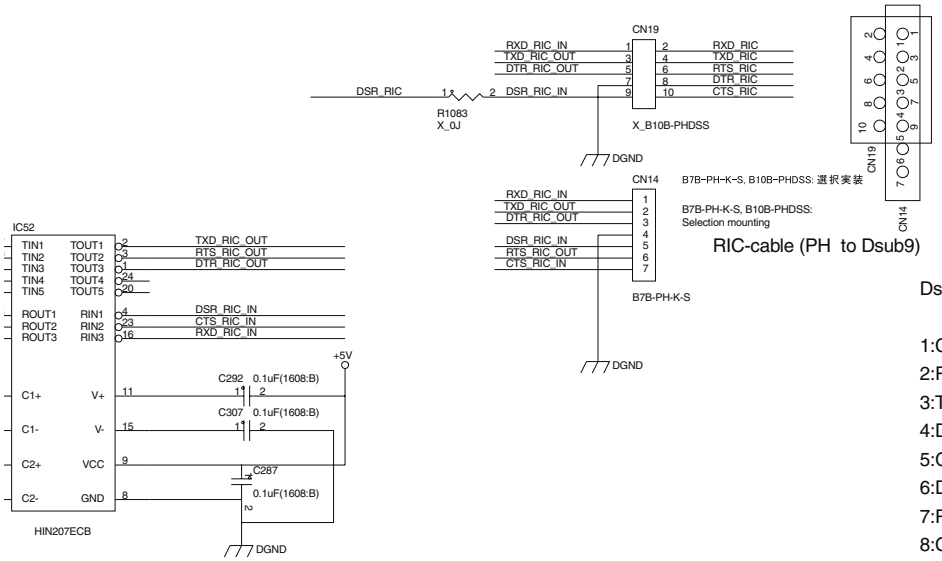

RIC-cable (PH to Dsub9)

Dsub9

1:CD
2:RXD
3:TXD
4:DTR
5:GND
6:DSR
7:RTS
8:CTS
9:RI

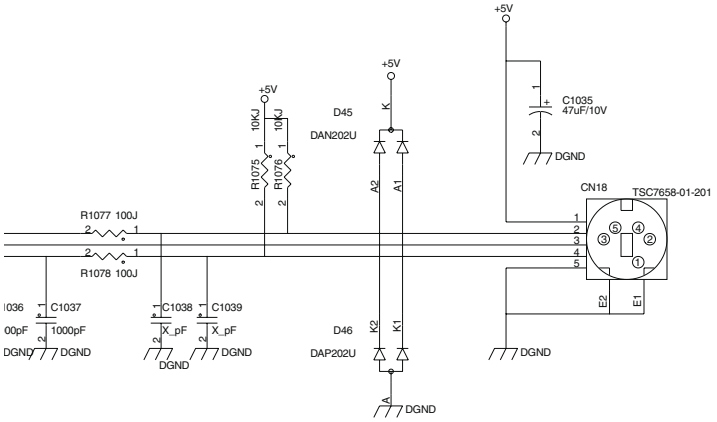

MinDin

1:+5V
2:RXD
3:TXD
4:GND(plugin detect)
5:GND

ICU PWB (POWER)

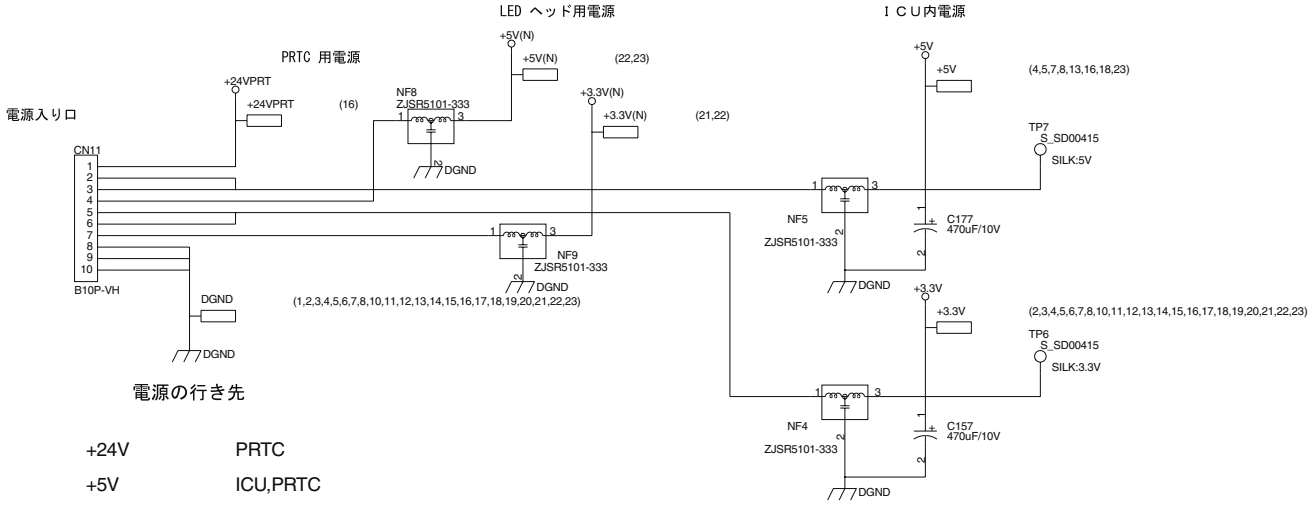

電源の行き先

+24V	PRTC
+5V	ICU,PRTC
+5V	ICU,PRTC
+5VN	LED-HEAD
+3.3V	ICU,PRTC
+3.3V	ICU,PRTC
+3.3VN	LED-HEAD
GND	
GND	
GND	

SH-3

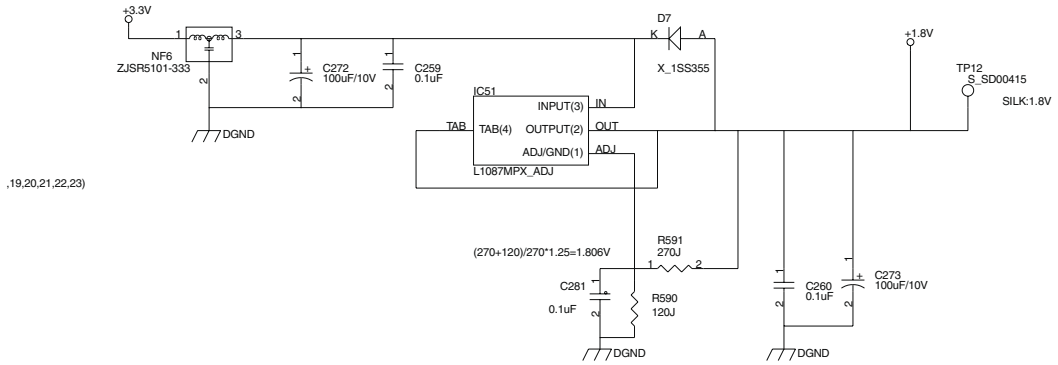

,19,20,21,22,23)

ICUASIC

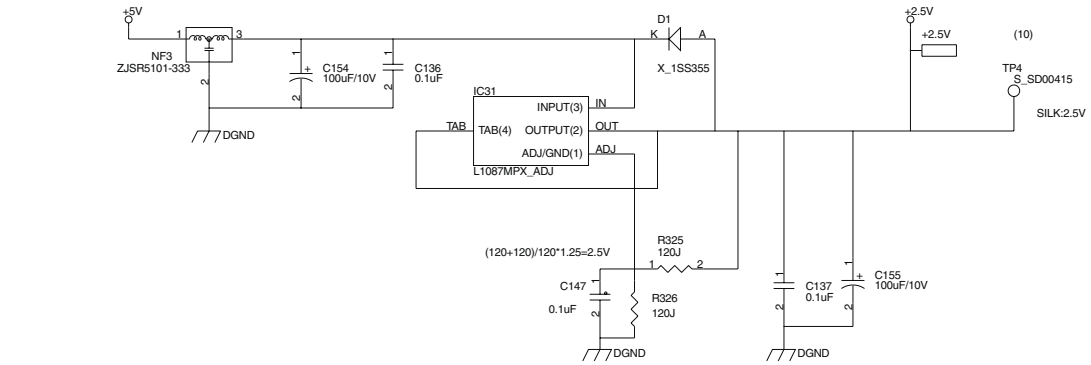

ICU PWB (ICU ASIC LED/MFP/PRTC)

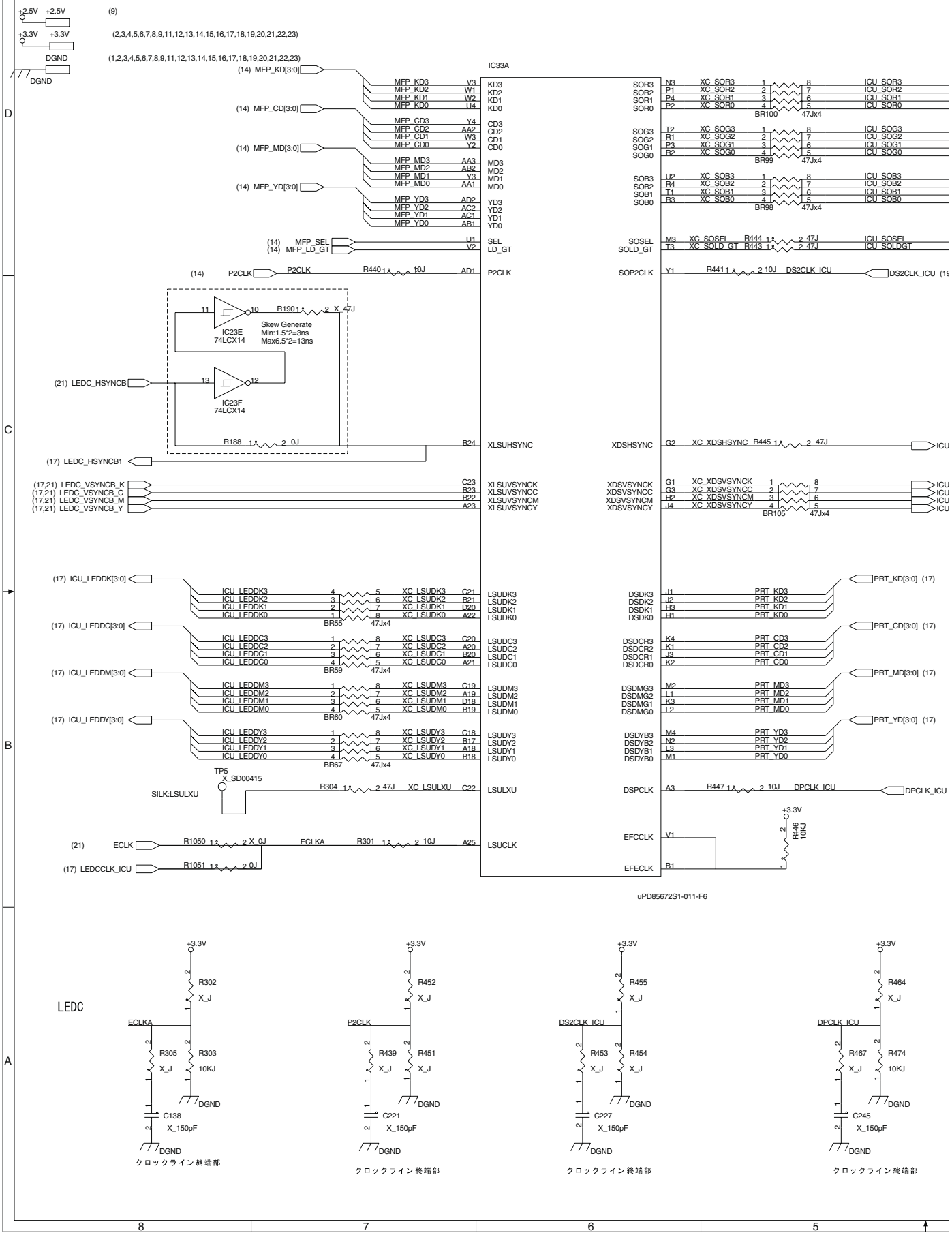

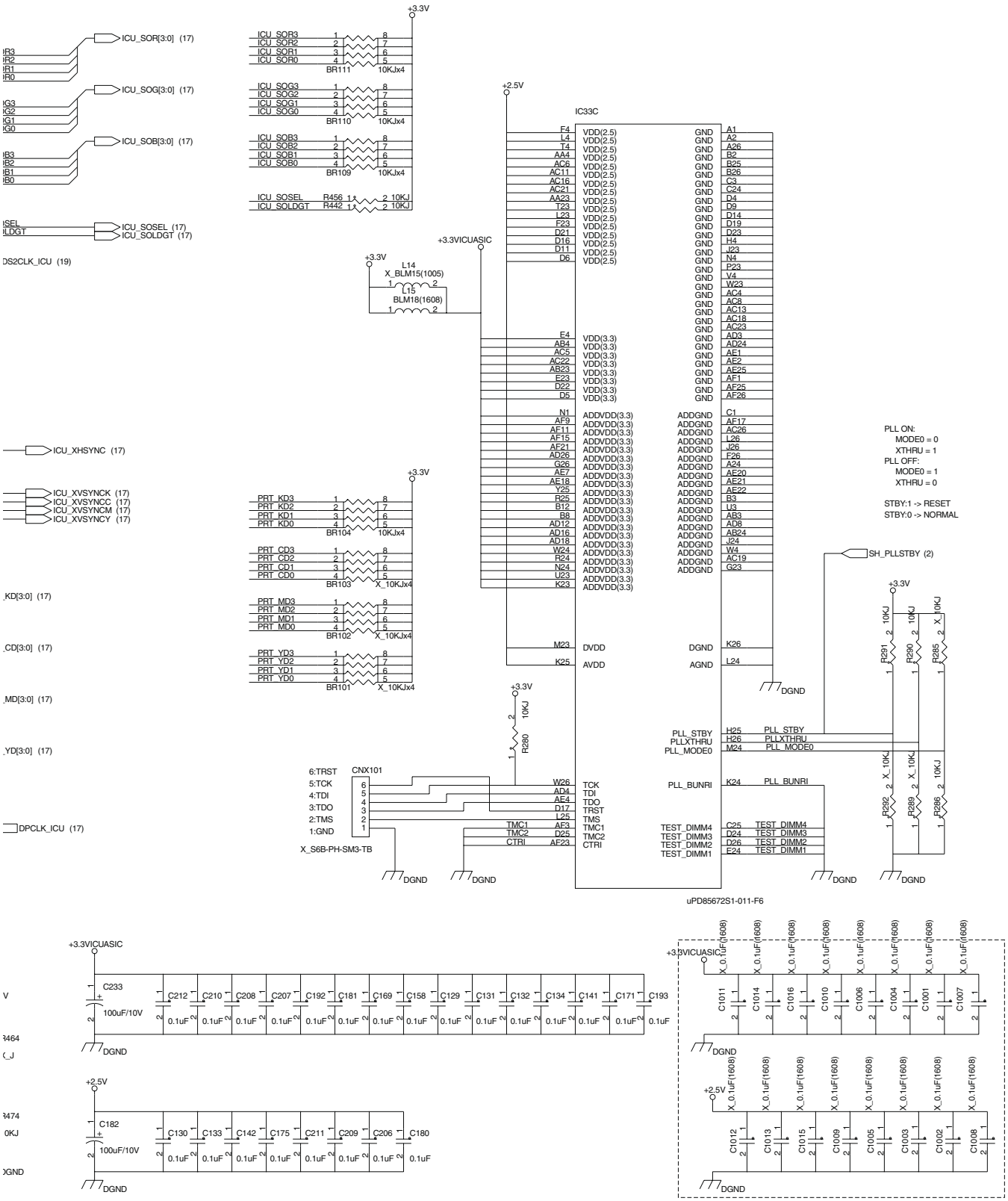
ICU_SOR[3:0] (17)
ICU_SOG[3:0] (17)
ICU_SOB[3:0] (17)
ICU_SOSEL (17)
ICU_SOLDGT (17)
ICU_XHSYNC (17)
ICU_XVSYNCK (17)
ICU_XVSYNCC (17)
ICU_XVSYNCM (17)
ICU_XVSYNCY (17)
DPCLK_ICU (17)
+3.3V
+2.5V
+3.3VICUASIC
BR111 10KJx4
BR110 10KJx4
BR109 10KJx4
BR104 10KJx4
BR103 X_10KJx4
BR102 X_10KJx4
BR101 X_10KJx4
R456 10KJ
R442 10KJ
L14 X_BLM15(1005)
L15 BLM18(1608)
IC33C
uPD85672S1-011-F6
PLL ON:
MODE0 = 0
XTHRU = 1
PLL OFF:
MODE0 = 1
XTHRU = 0
STBY:1 -> RESET
STBY:0 -> NORMAL
SH_PLLSTBY (2)
PLL_STBY
PLLXTHRU
PLL_MODE0
PLL_BUNRI
TEST_DIMM4
TEST_DIMM3
TEST_DIMM2
TEST_DIMM1
CNX101
6:TRST
5:TCK
4:TDI
3:TDO
2:TMS
1:GND
X_S6B-PH-SM3-TB
C233 100uF/10V
C182 100uF/10V
0.1uF
X_0.1uF(1608)
DGND

ICU PWB (ICU ASIC SDRAM/JBIG/SH3)

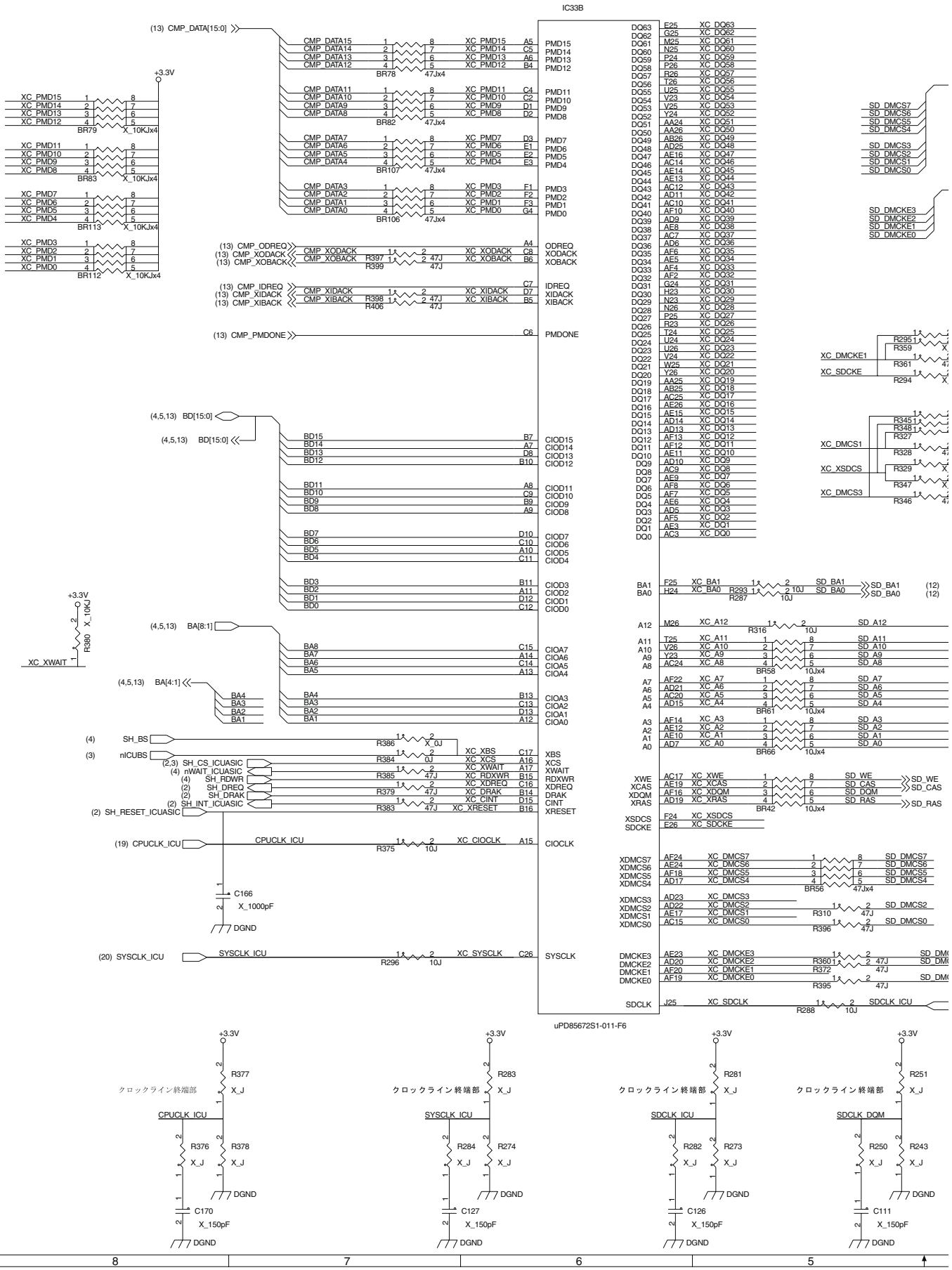

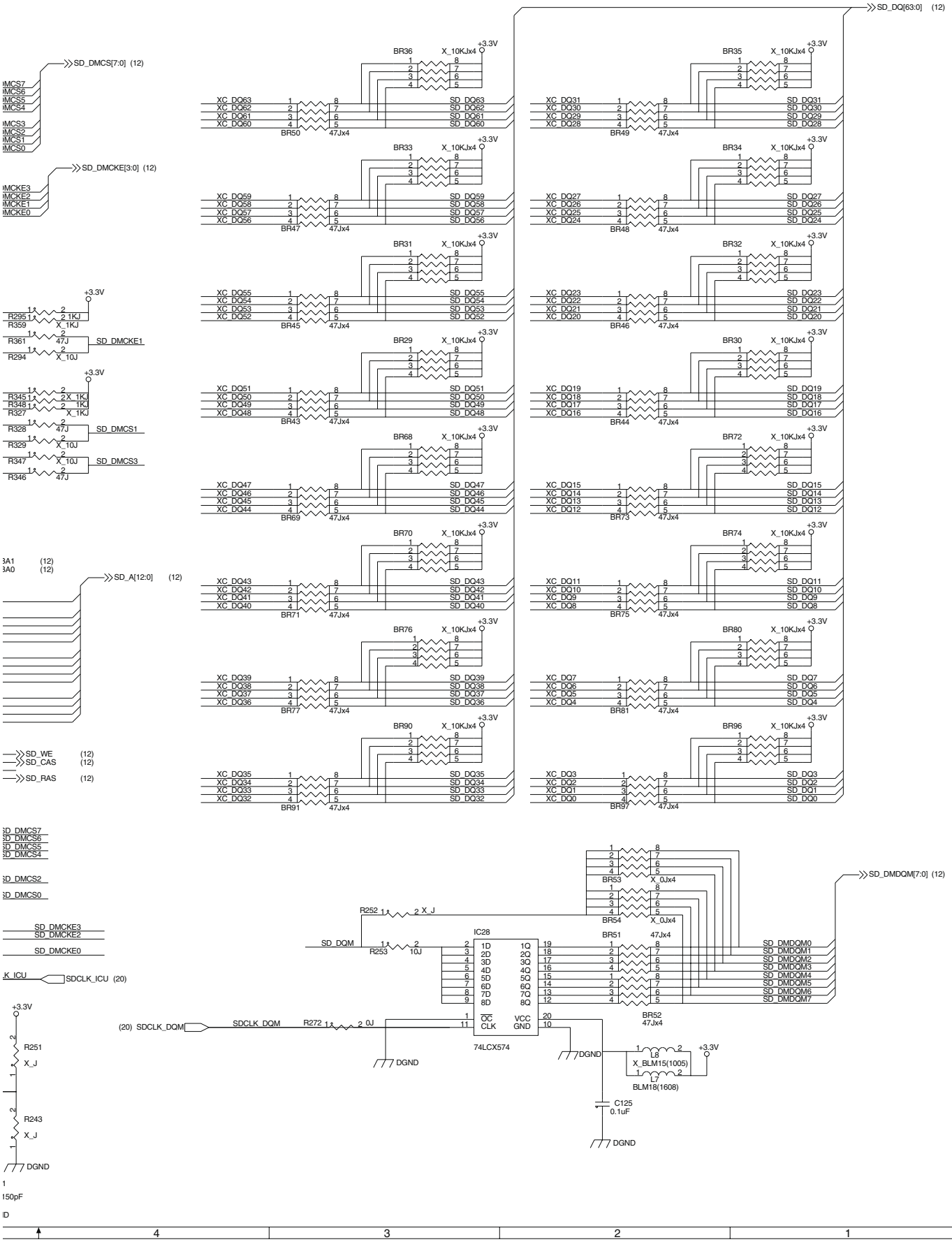
SD_DQ[63:0] (12)
SD_DMCS[7:0] (12)
SD_DMCKE[3:0] (12)
SD_A[12:0] (12)
SD_WE (12)
SD_CAS (12)
SD_RAS (12)
SD_DMCKE1
SD_DMCS1
SD_DMCS3
SD_DMDQM[7:0] (12)
SDCLK_ICU (20)
(20) SDCLK_DQM
SD_DQM
SDCLK_DQM
IC28
74LCX574
DGND
+3.3V
X_10KJx4
47Jx4
X_0Jx4
X_BLM15(1005)
BLM18(1608)
C125
0.1uF

ICU PWB (DIMM)

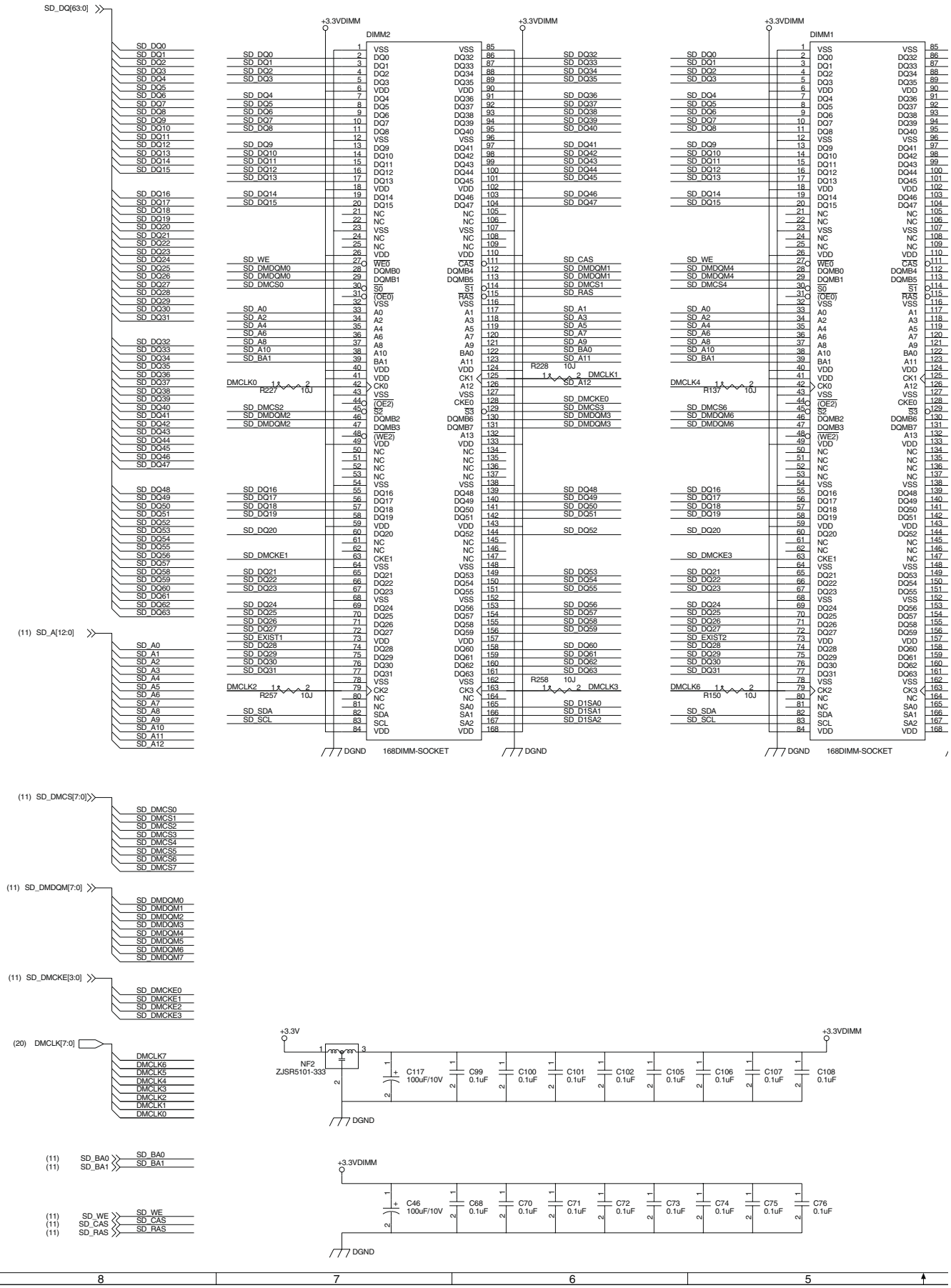
SD_DQ[63:0]
+3.3VDIMM
DIMM2
DIMM1
168DIMM-SOCKET
DGND
(11) SD_A[12:0]
(11) SD_DMCS[7:0]
(11) SD_DMDQM[7:0]
(11) SD_DMCKE[3:0]
(20) DMCLK[7:0]
(11) SD_BA0
(11) SD_BA1
(11) SD_WE
(11) SD_CAS
(11) SD_RAS
+3.3V
NF2
ZJSR5101-333
C117 100uF/10V
C99 0.1uF
C100 0.1uF
C101 0.1uF
C102 0.1uF
C105 0.1uF
C106 0.1uF
C107 0.1uF
C108 0.1uF
C46 100uF/10V
C68 0.1uF
C70 0.1uF
C71 0.1uF
C72 0.1uF
C73 0.1uF
C74 0.1uF
C75 0.1uF
C76 0.1uF

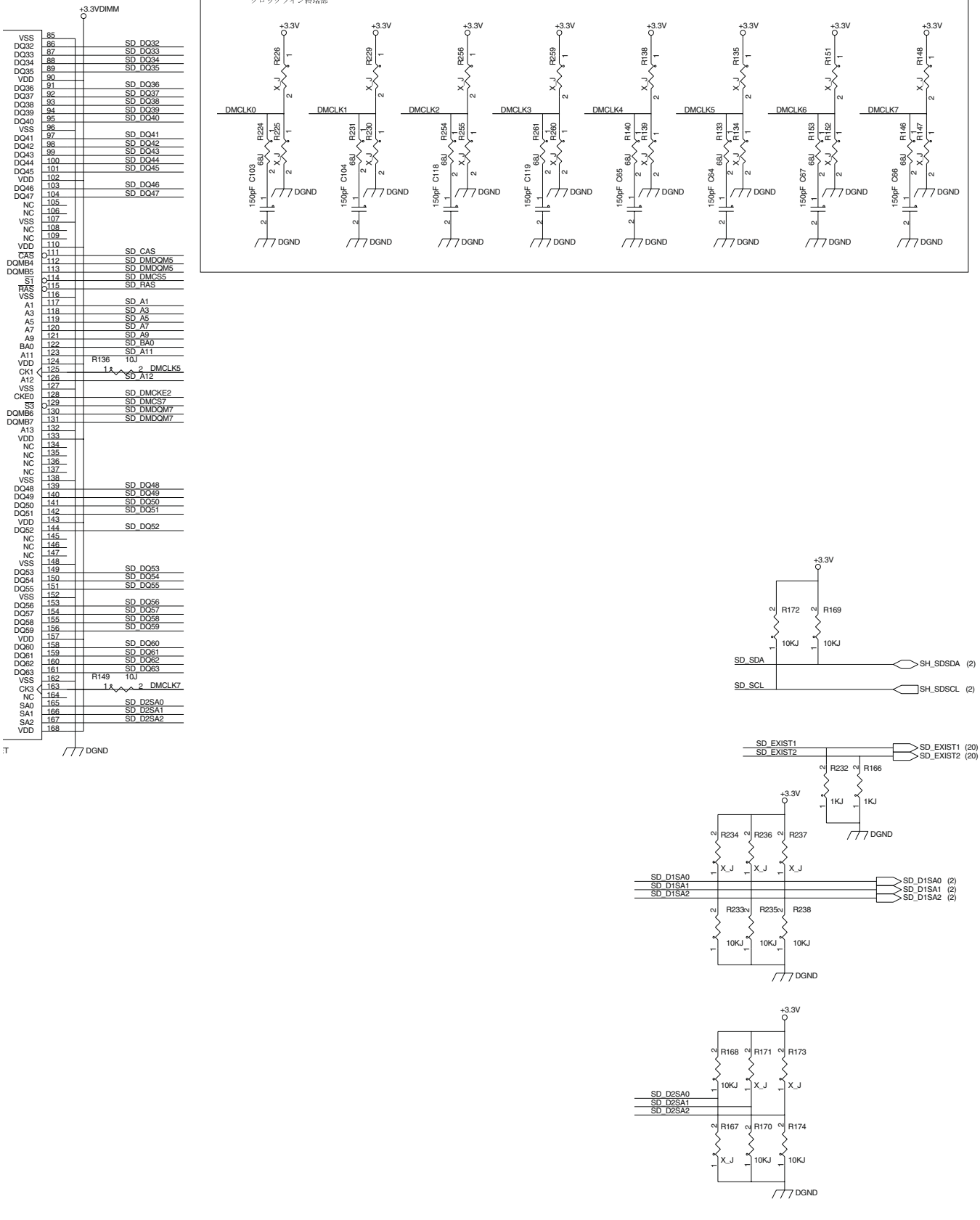
+3.3VDIMM
VSS 85
DQ32 86 SD_DQ32
DQ33 87 SD_DQ33
DQ34 88 SD_DQ34
DQ35 89 SD_DQ35
VDD 90
DQ36 91 SD_DQ36
DQ37 92 SD_DQ37
DQ38 93 SD_DQ38
DQ39 94 SD_DQ39
DQ40 95 SD_DQ40
VSS 96
DQ41 97 SD_DQ41
DQ42 98 SD_DQ42
DQ43 99 SD_DQ43
DQ44 100 SD_DQ44
DQ45 101 SD_DQ45
VDD 102
DQ46 103 SD_DQ46
DQ47 104 SD_DQ47
NC 105
NC 106
VSS 107
NC 108
NC 109
VDD 110
CAS 111 SD_CAS
DQMB4 112 SD_DMDQM5
DQMB5 113 SD_DMDQM5
S1 114 SD_DMCS5
RAS 115 SD_RAS
VSS 116
A1 117 SD_A1
A3 118 SD_A3
A5 119 SD_A5
A7 120 SD_A7
A9 121 SD_A9
BA0 122 SD_BA0
A11 123 SD_A11
VDD 124
R136 10J
CK1 125 1 2 DMCLK5
A12 126 SD_A12
VSS 127
CKE0 128 SD_DMCKE2
S3 129 SD_DMCS7
DQMB6 130 SD_DMDQM7
DQMB7 131 SD_DMDQM7
A13 132
VDD 133
NC 134
NC 135
NC 136
NC 137
VSS 138
DQ48 139 SD_DQ48
DQ49 140 SD_DQ49
DQ50 141 SD_DQ50
DQ51 142 SD_DQ51
VDD 143
DQ52 144 SD_DQ52
NC 145
NC 146
NC 147
VSS 148
DQ53 149 SD_DQ53
DQ54 150 SD_DQ54
DQ55 151 SD_DQ55
VSS 152
DQ56 153 SD_DQ56
DQ57 154 SD_DQ57
DQ58 155 SD_DQ58
DQ59 156 SD_DQ59
VDD 157
DQ60 158 SD_DQ60
DQ61 159 SD_DQ61
DQ62 160 SD_DQ62
DQ63 161 SD_DQ63
VSS 162
R149 10J
CK3 163 1 2 DMCLK7
NC 164
SA0 165 SD_D2SA0
SA1 166 SD_D2SA1
SA2 167 SD_D2SA2
VDD 168
DGND
クロックライン終端部
+3.3V
R226 R229 R256 R259 R138 R135 R151 R148
DMCLK0 DMCLK1 DMCLK2 DMCLK3 DMCLK4 DMCLK5 DMCLK6 DMCLK7
R224 R225 R231 R230 R254 R255 R261 R260 R140 R139 R133 R134 R153 R152 R146 R147
68J X_J
C103 C104 C118 C119 C85 C84 C87 C86
150pF
DGND
+3.3V
R172 R169
10KJ
SD_SDA SH_SDSDA (2)
SD_SCL SH_SDSCL (2)
SD_EXIST1 SD_EXIST1 (20)
SD_EXIST2 SD_EXIST2 (20)
R232 R166
1KJ
R234 R236 R237
X_J
SD_D1SA0 SD_D1SA0 (2)
SD_D1SA1 SD_D1SA1 (2)
SD_D1SA2 SD_D1SA2 (2)
R233 R235 R238
10KJ
R168 R171 R173
R167 R170 R174

ICU PWB (PM-2500)

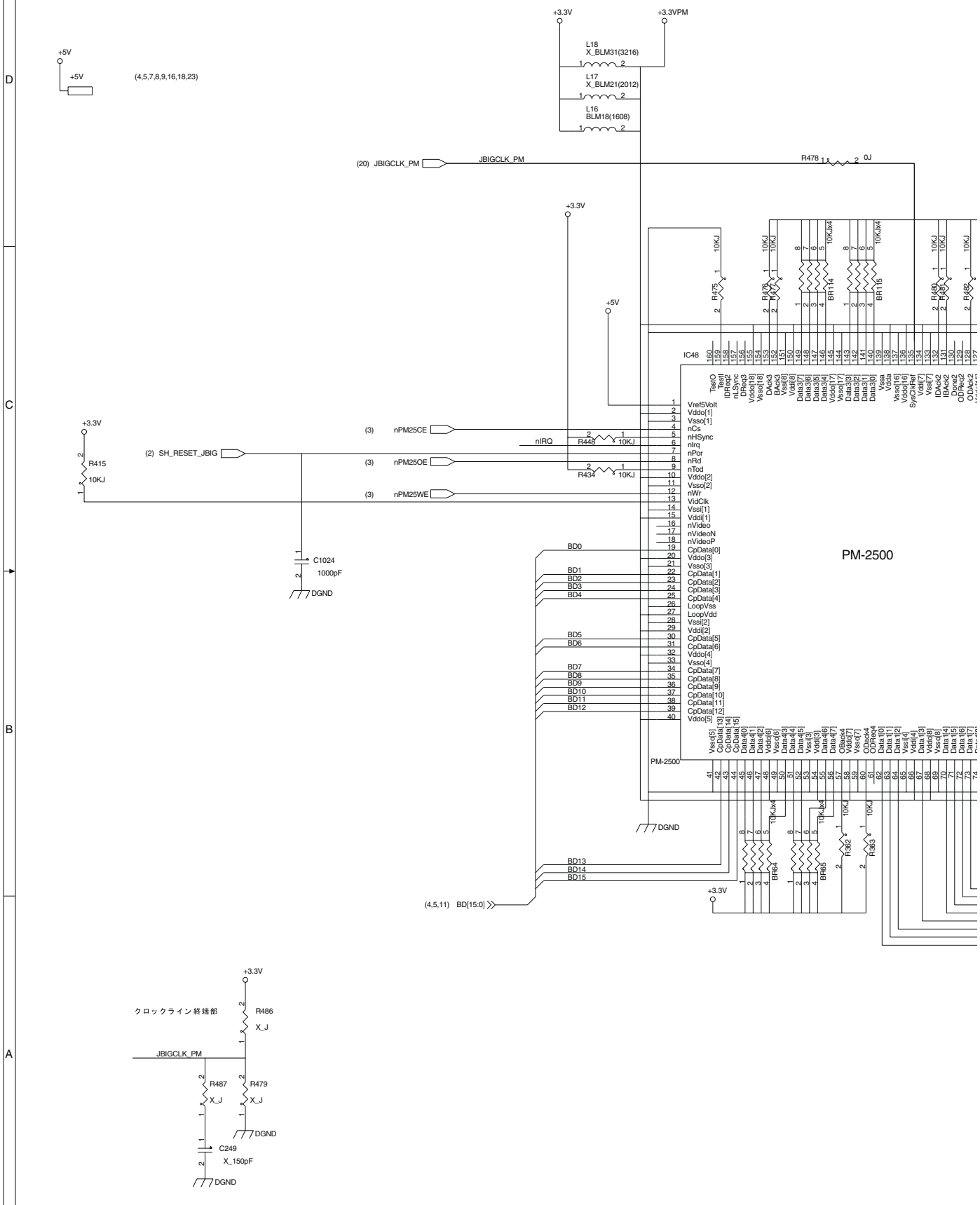

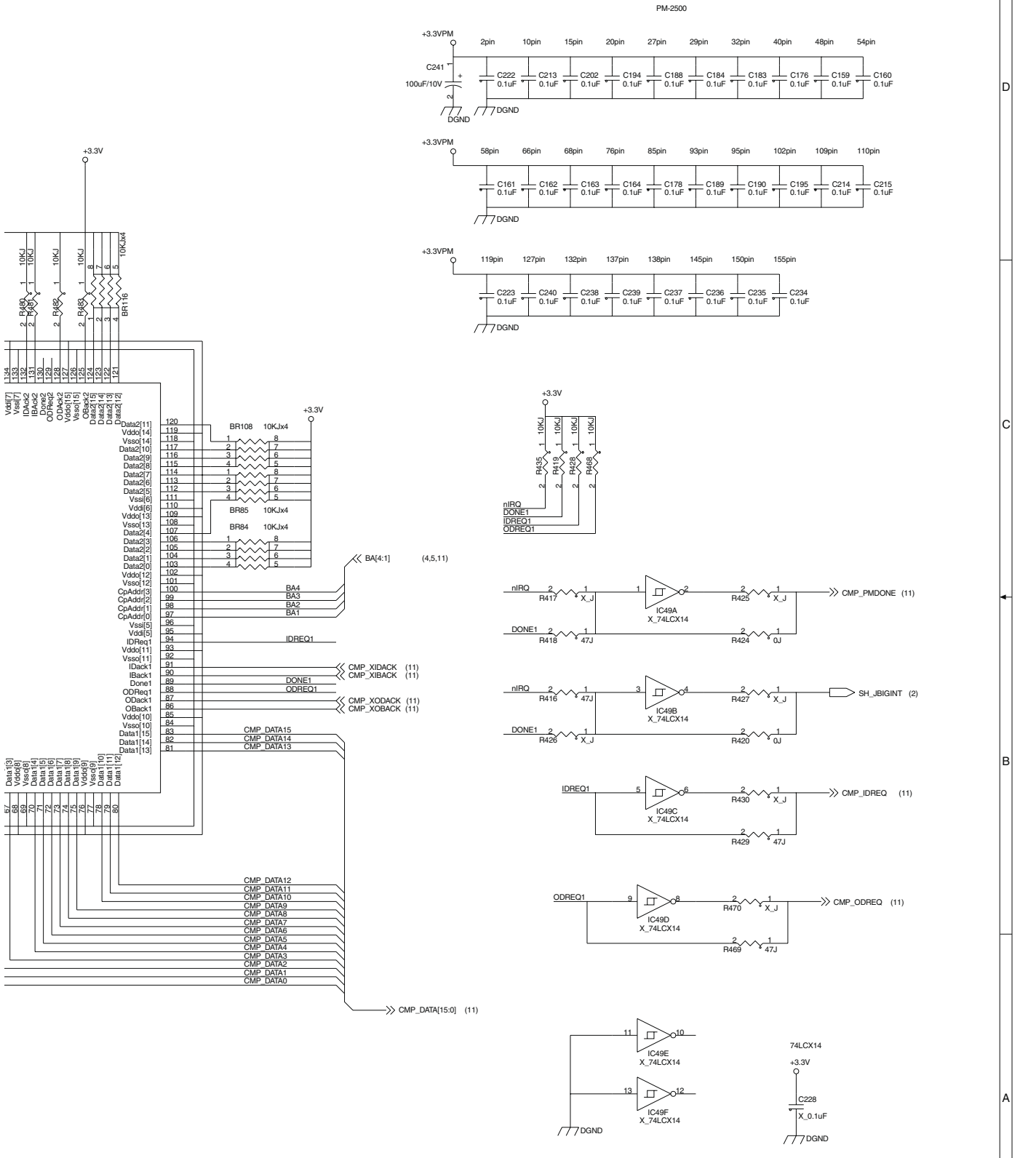
PM-2500
+3.3VPM
2pin 10pin 15pin 20pin 27pin 29pin 32pin 40pin 48pin 54pin
C241
100uF/10V
C222 C213 C202 C194 C188 C184 C183 C176 C159 C160
0.1uF
DGND
58pin 66pin 68pin 76pin 85pin 93pin 95pin 102pin 109pin 110pin
C161 C162 C163 C164 C178 C189 C190 C195 C214 C215
119pin 127pin 132pin 137pin 138pin 145pin 150pin 155pin
C223 C240 C238 C239 C237 C236 C235 C234
+3.3V
10KJ
R480 R481 R482 R483
BR116 10KJx4
BR108 10KJx4
BR85 10KJx4
BR84 10KJx4
R435 R419 R428 R468
nIRQ
DONE1
IDREQ1
ODREQ1
BA[4:1] (4,5,11)
BA4
BA3
BA2
BA1
IDREQ1
CMP_XIDACK (11)
CMP_XIBACK (11)
DONE1
ODREQ1
CMP_XODACK (11)
CMP_XOBACK (11)
CMP_DATA15
CMP_DATA14
CMP_DATA13
CMP_DATA12
CMP_DATA11
CMP_DATA10
CMP_DATA9
CMP_DATA8
CMP_DATA7
CMP_DATA6
CMP_DATA5
CMP_DATA4
CMP_DATA3
CMP_DATA2
CMP_DATA1
CMP_DATA0
CMP_DATA[15:0] (11)
R417 R425 R418 R424
IC49A X_74LCX14
CMP_PMDONE (11)
R416 R427 R426 R420
IC49B X_74LCX14
SH_JBIGINT (2)
R430 R429
IC49C X_74LCX14
CMP_IDREQ (11)
R470 R469
IC49D X_74LCX14
CMP_ODREQ (11)
IC49E X_74LCX14
IC49F X_74LCX14
74LCX14
C228
X_0.1uF
DGND

ICU PWB (MFPIF & FPDLINK)

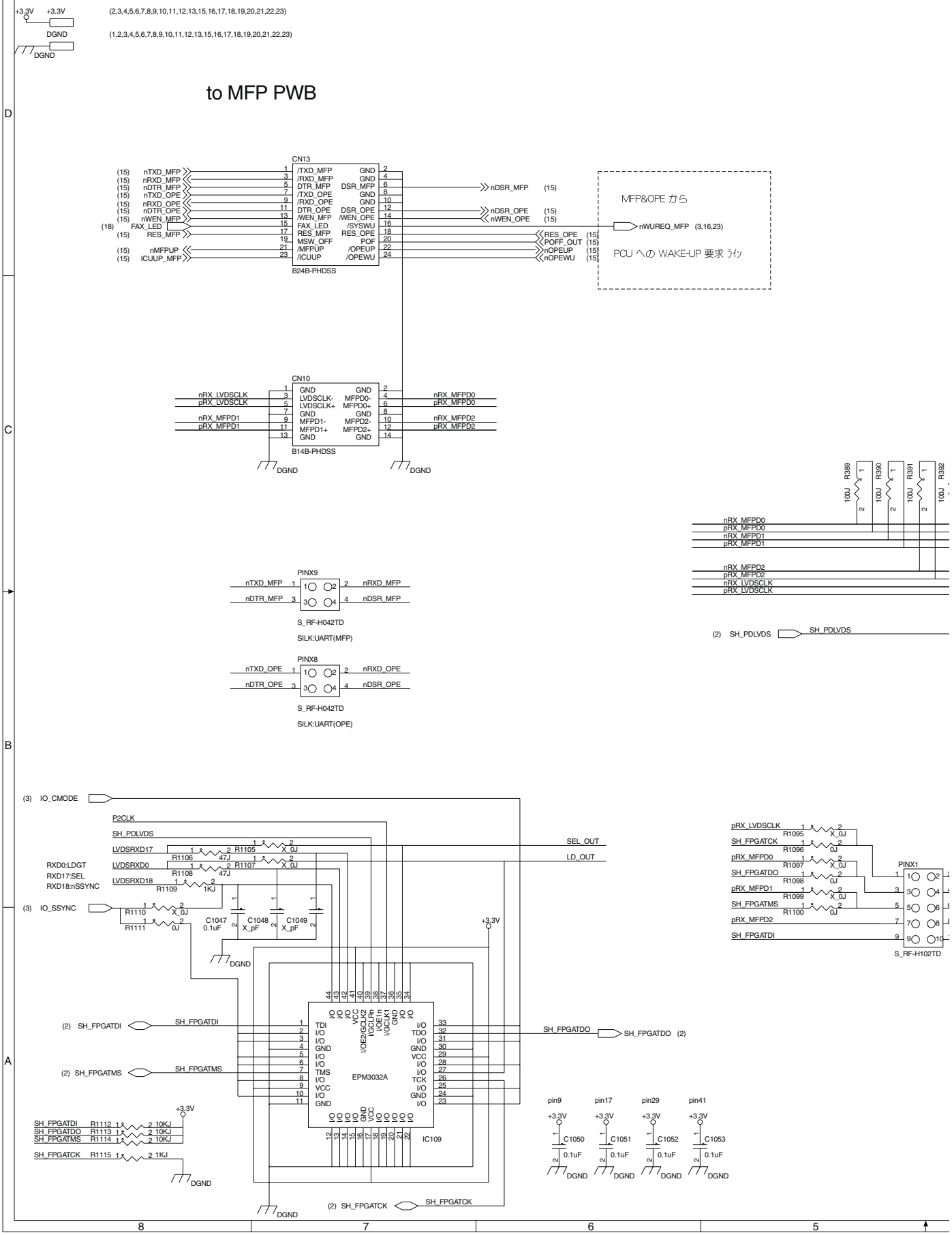

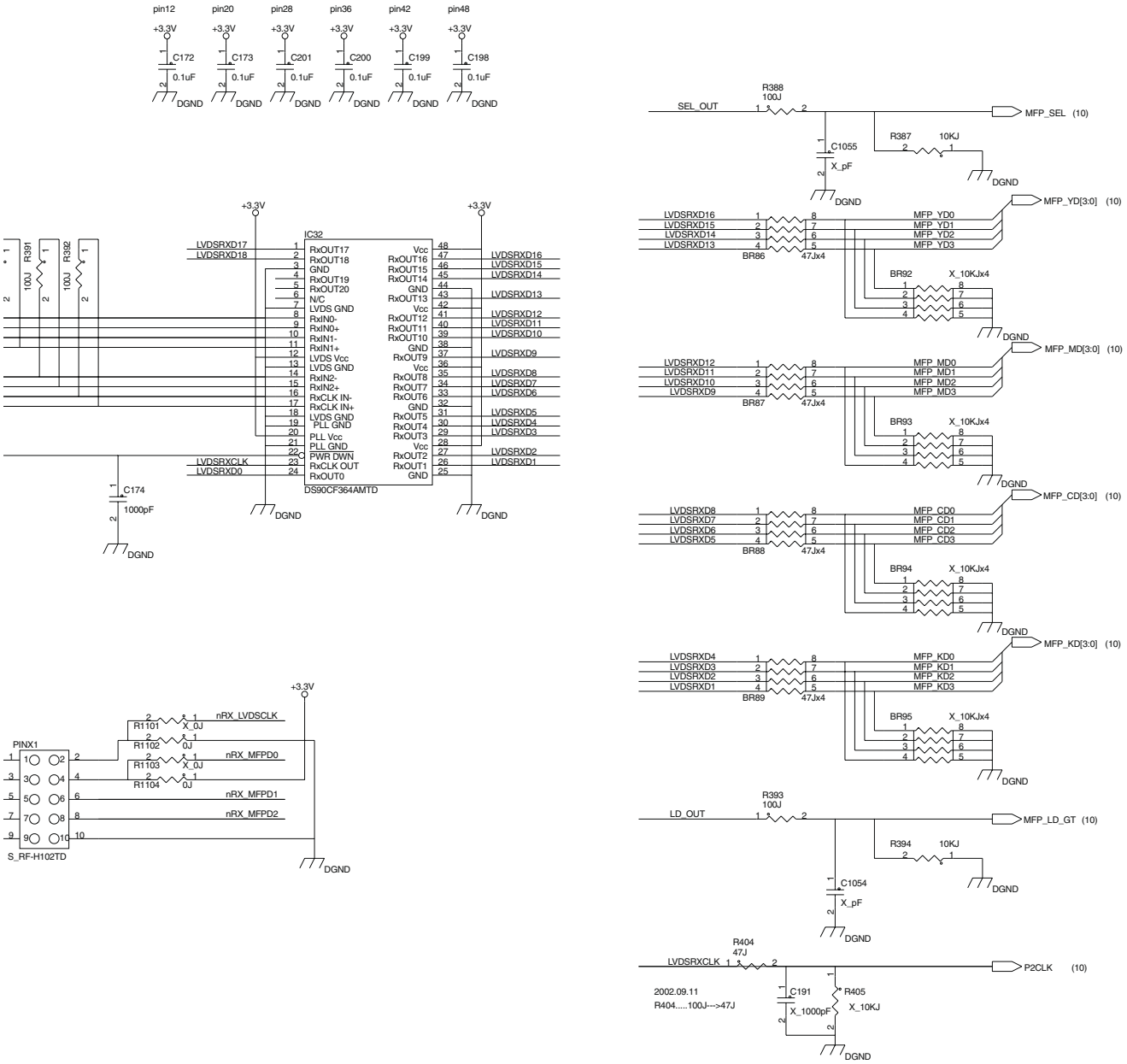
pin12
pin20
pin28
pin36
pin42
pin48
+3.3V
C172
C173
C201
C200
C199
C198
0.1uF
DGND
R391
R392
100J
IC32
DS90CF364AMTD
LVDSRXD17
LVDSRXD18
LVDSRXCLK
LVDSRXD0
RxOUT17
RxOUT18
GND
RxOUT19
RxOUT20
N/C
LVDS GND
RxIN0-
RxIN0+
RxIN1-
RxIN1+
LVDS Vcc
LVDS GND
RxIN2-
RxIN2+
RxCLK IN-
RxCLK IN+
LVDS GND
PLL GND
PLL Vcc
PLL GND
PWR DWN
RxCLK OUT
RxOUT0
Vcc
RxOUT16
RxOUT15
RxOUT14
GND
RxOUT13
Vcc
RxOUT12
RxOUT11
RxOUT10
GND
RxOUT9
Vcc
RxOUT8
RxOUT7
RxOUT6
GND
RxOUT5
RxOUT4
RxOUT3
Vcc
RxOUT2
RxOUT1
GND
LVDSRXD16
LVDSRXD15
LVDSRXD14
LVDSRXD13
LVDSRXD12
LVDSRXD11
LVDSRXD10
LVDSRXD9
LVDSRXD8
LVDSRXD7
LVDSRXD6
LVDSRXD5
LVDSRXD4
LVDSRXD3
LVDSRXD2
LVDSRXD1
C174
1000pF
PINX1
S_RF-H102TD
R1101
R1102
R1103
R1104
X_0J
nRX_LVDSCLK
nRX_MFPD0
nRX_MFPD1
nRX_MFPD2
R388
100J
SEL_OUT
MFP_SEL (10)
R387
10KJ
C1055
X_pF
MFP_YD[3:0] (10)
MFP_YD0
MFP_YD1
MFP_YD2
MFP_YD3
BR86
47Jx4
BR92
X_10KJx4
MFP_MD[3:0] (10)
MFP_MD0
MFP_MD1
MFP_MD2
MFP_MD3
BR87
BR93
MFP_CD[3:0] (10)
MFP_CD0
MFP_CD1
MFP_CD2
MFP_CD3
BR88
BR94
MFP_KD[3:0] (10)
MFP_KD0
MFP_KD1
MFP_KD2
MFP_KD3
BR89
BR95
R393
LD_OUT
MFP_LD_GT (10)
R394
C1054
R404
47J
LVDSRXCLK
P2CLK (10)
2002.09.11
R404.....100J--->47J
C191
X_1000pF
R405
X_10KJ

ICU PWB (PORT MFP)

CONNECTOR(MFP)

CONNECTC

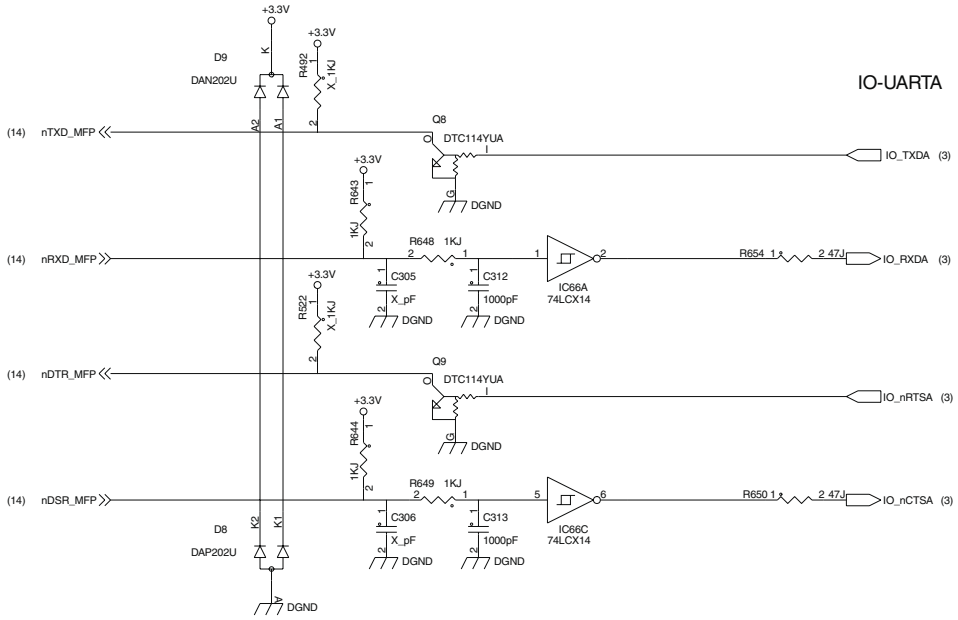

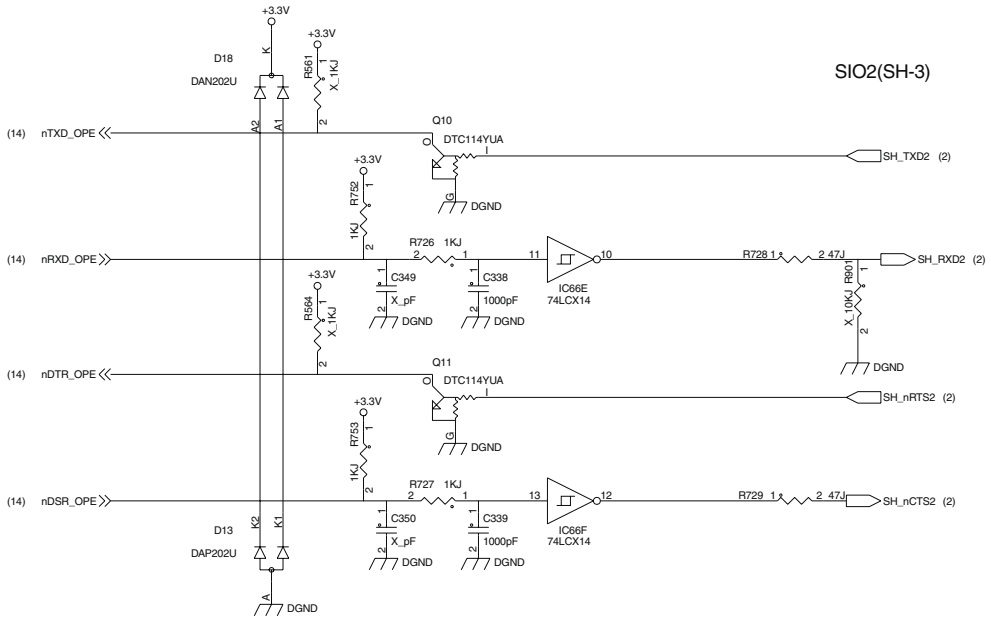

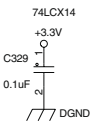

ONNECTOR(MFP)

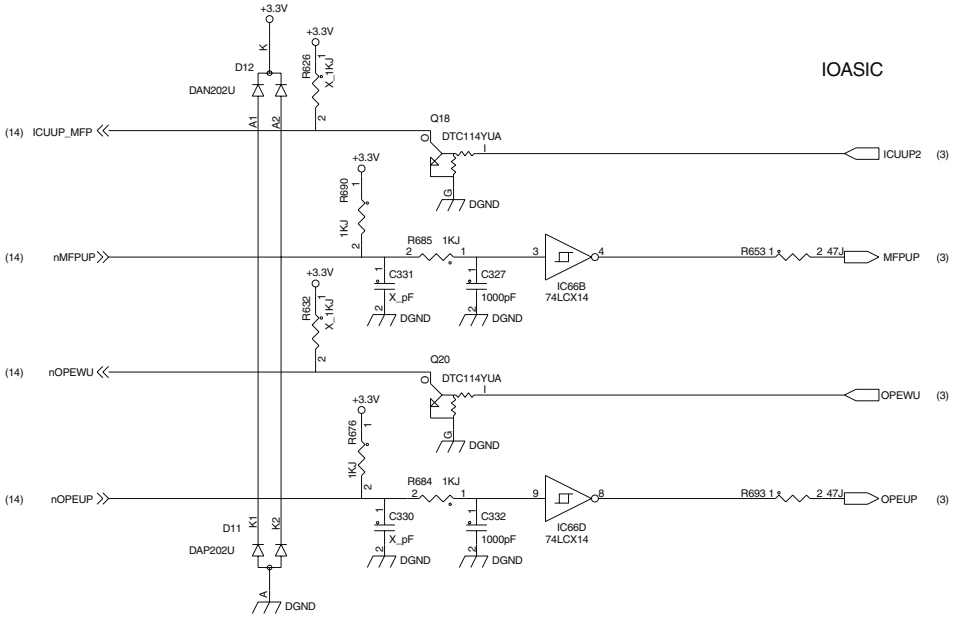

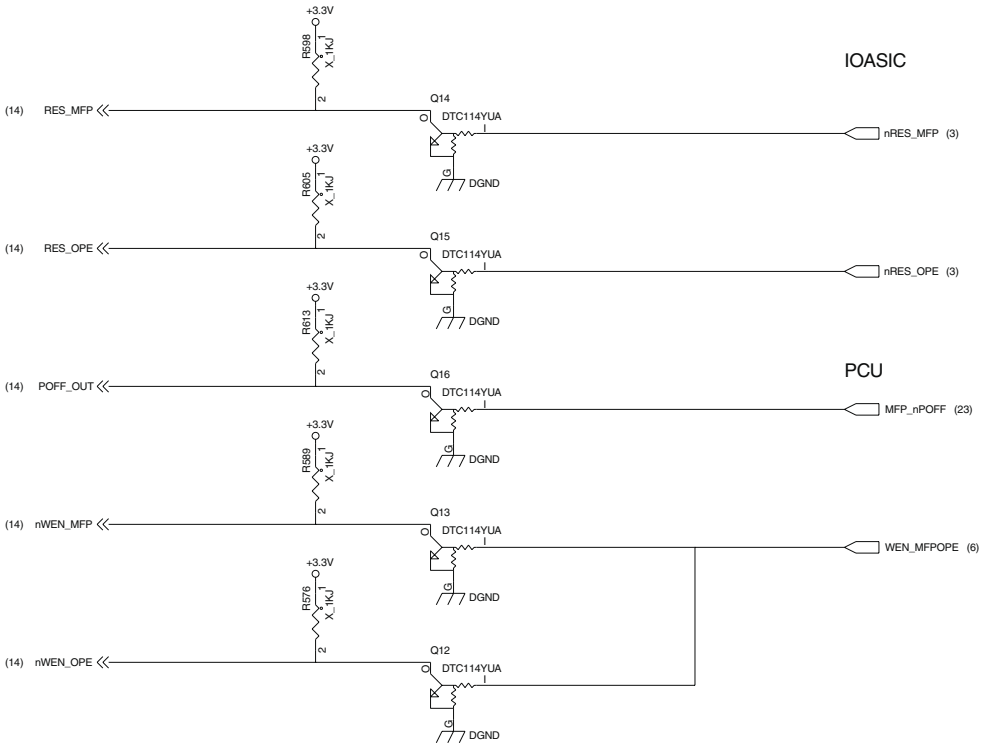

ICU PWB (PRTC I/F)

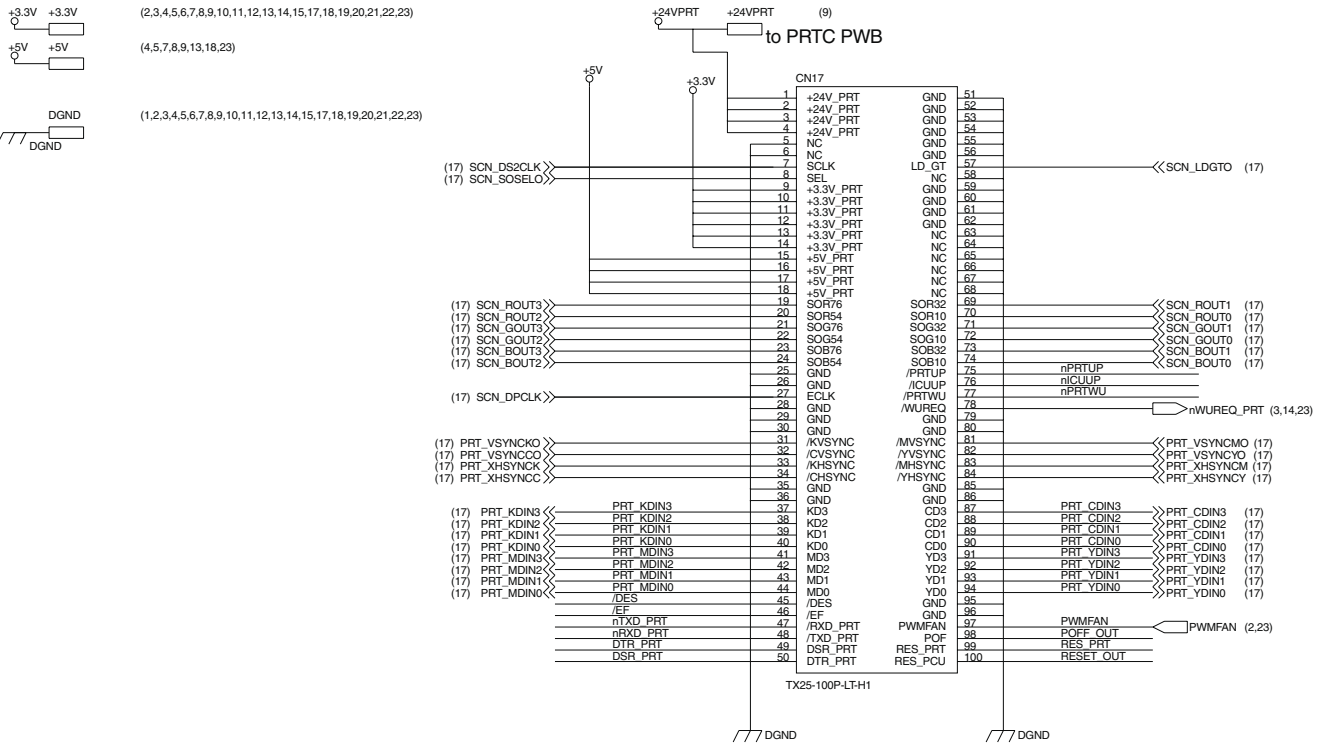

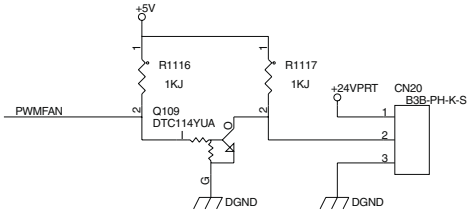

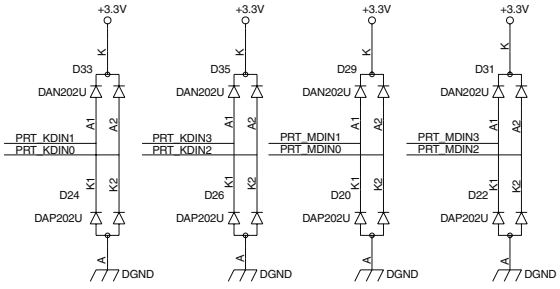

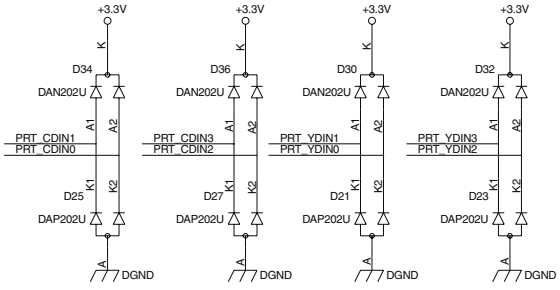

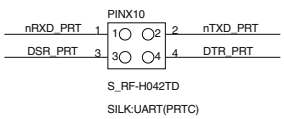

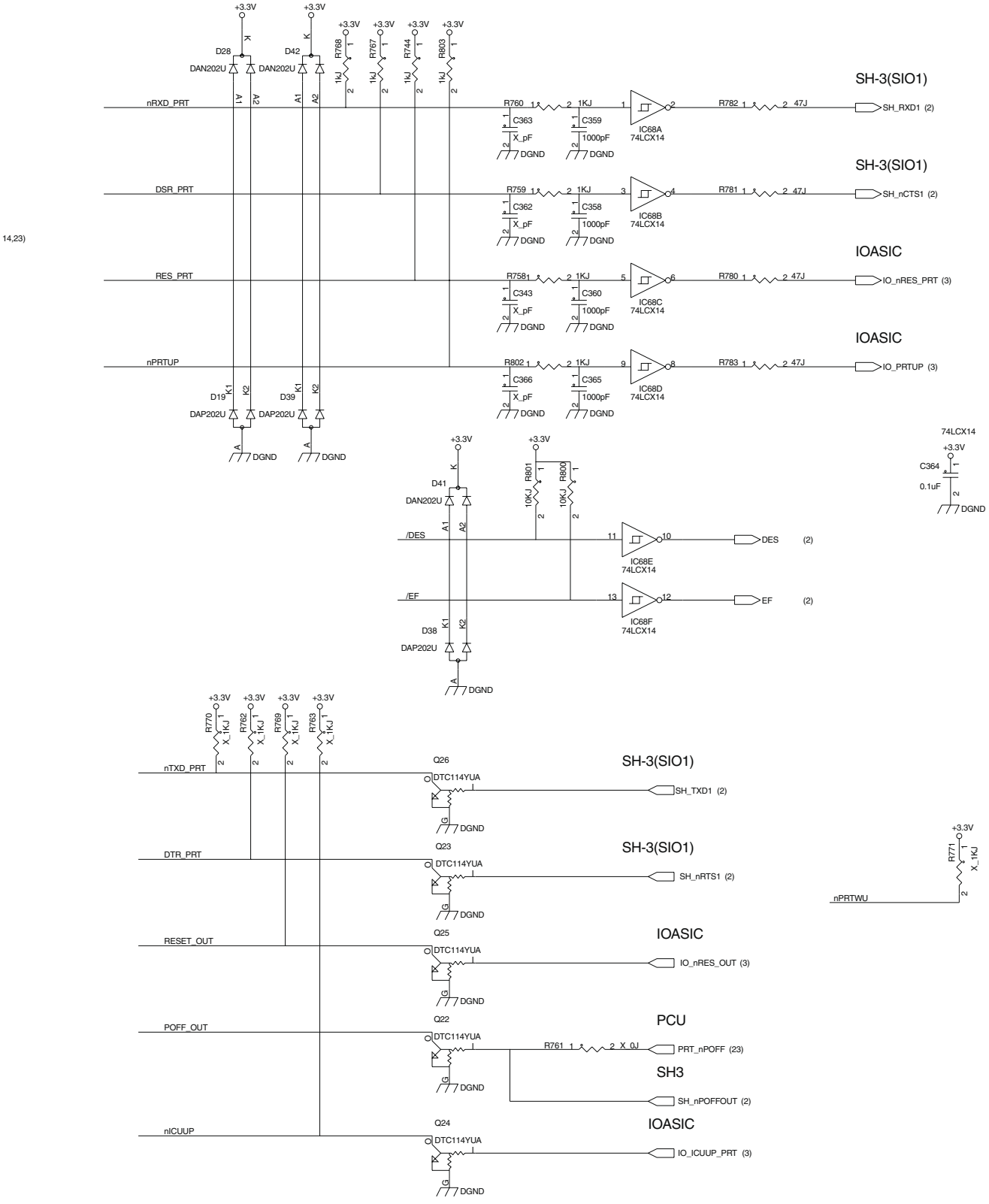
+3.3V
D28
DAN202U
D42
DAN202U
R768 1KJ
R767 1KJ
R744 1KJ
R803 1KJ
nRXD_PRT
R760 1KJ
C363 X_pF
C359 1000pF
IC68A 74LCX14
R782 47J
SH-3(SIO1)
SH_RXD1 (2)
DSR_PRT
R759 1KJ
C362 X_pF
C358 1000pF
IC68B 74LCX14
R781 47J
SH-3(SIO1)
SH_nCTS1 (2)
RES_PRT
R7581 1KJ
C343 X_pF
C360 1000pF
IC68C 74LCX14
R780 47J
IOASIC
IO_nRES_PRT (3)
nPRTUP
R802 1KJ
C366 X_pF
C365 1000pF
IC68D 74LCX14
R783 47J
IOASIC
IO_PRTUP (3)
D19
DAP202U
D39
DAP202U
DGND
14,23)
D41
DAN202U
R801 10KJ
R800 10KJ
/DES
IC68E 74LCX14
DES (2)
/EF
IC68F 74LCX14
EF (2)
D38
DAP202U
74LCX14
C364 0.1uF
R770 X_1KJ
R762 X_1KJ
R769 X_1KJ
R763 X_1KJ
nTXD_PRT
Q26
DTC114YUA
SH-3(SIO1)
SH_TXD1 (2)
DTR_PRT
Q23
DTC114YUA
SH-3(SIO1)
SH_nRTS1 (2)
RESET_OUT
Q25
DTC114YUA
IOASIC
IO_nRES_OUT (3)
POFF_OUT
Q22
DTC114YUA
R761 X 0J
PCU
PRT_nPOFF (23)
SH3
SH_nPOFFOUT (2)
nICUUP
Q24
DTC114YUA
IOASIC
IO_ICUUP_PRT (3)
R771 X_1KJ
nPRTWU

ICU PWB (DATA SELECT)

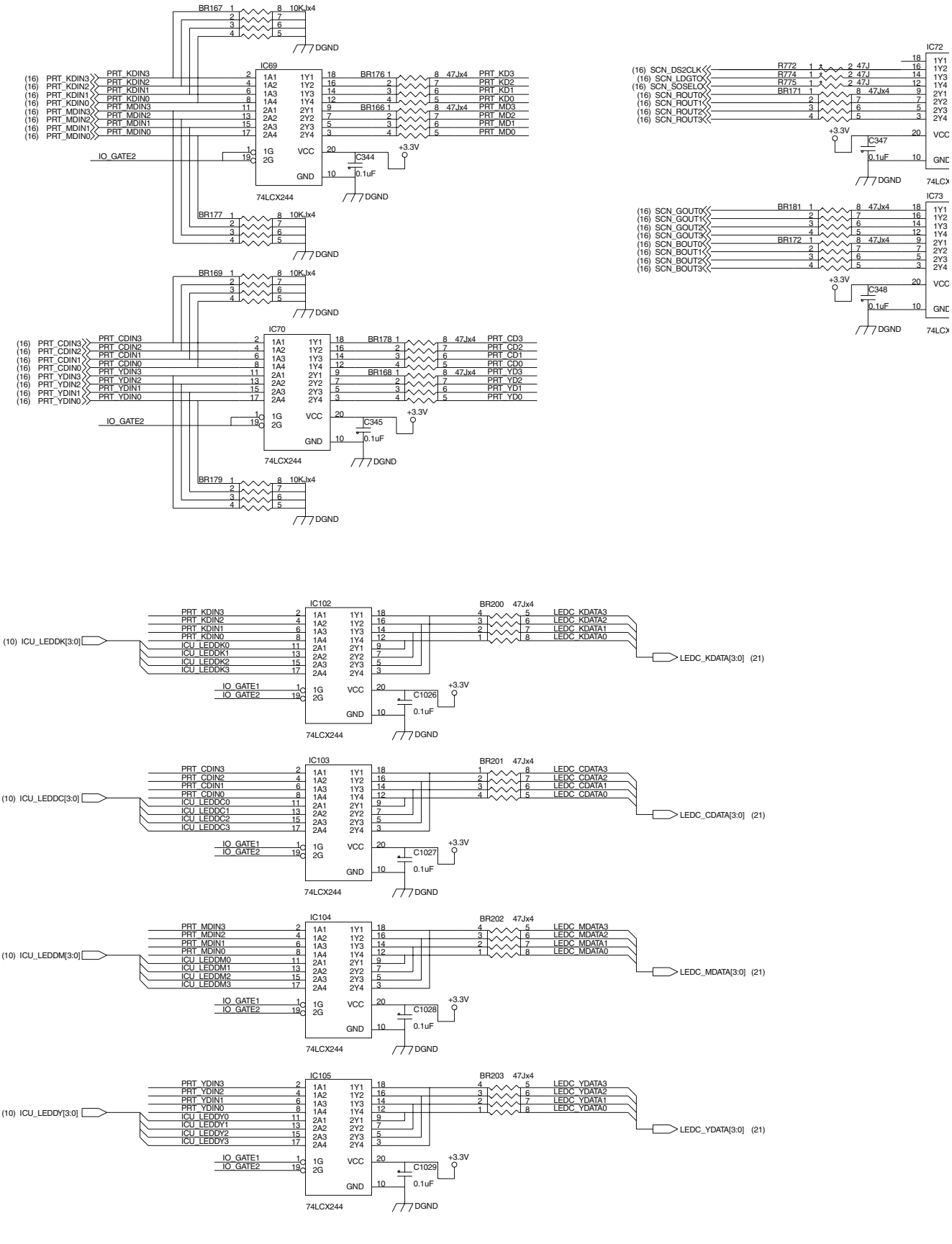

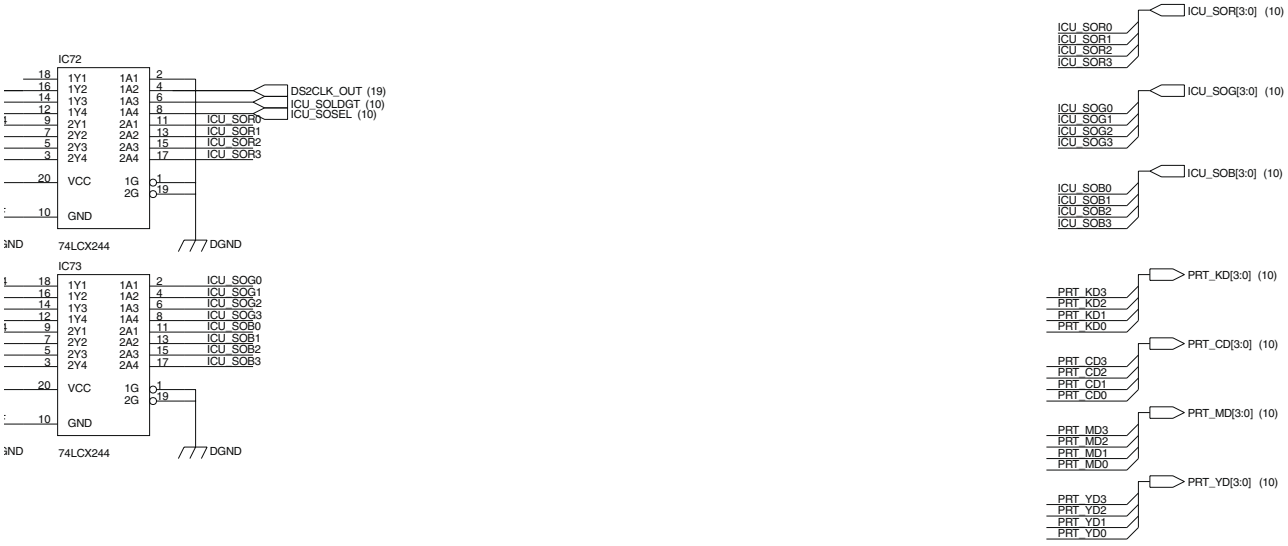

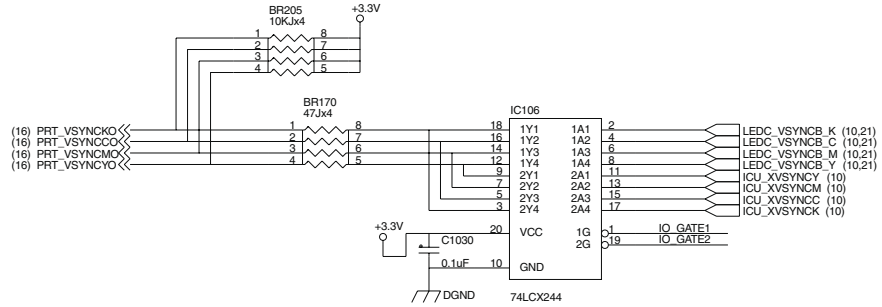

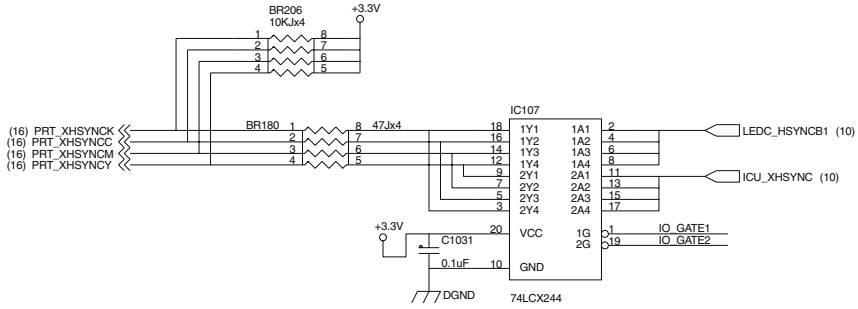

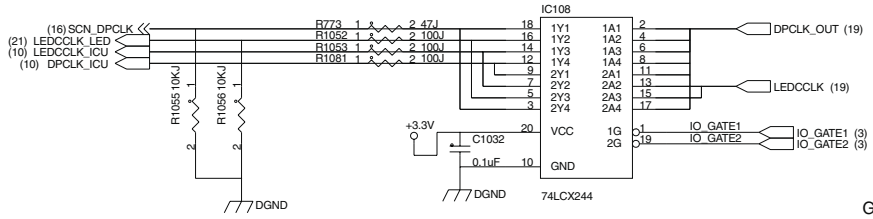

GATE1:GATE2
0:1 THROUGH MODE
1:0 ICU ASIC MODE

ICU PWB (FAX I/F)

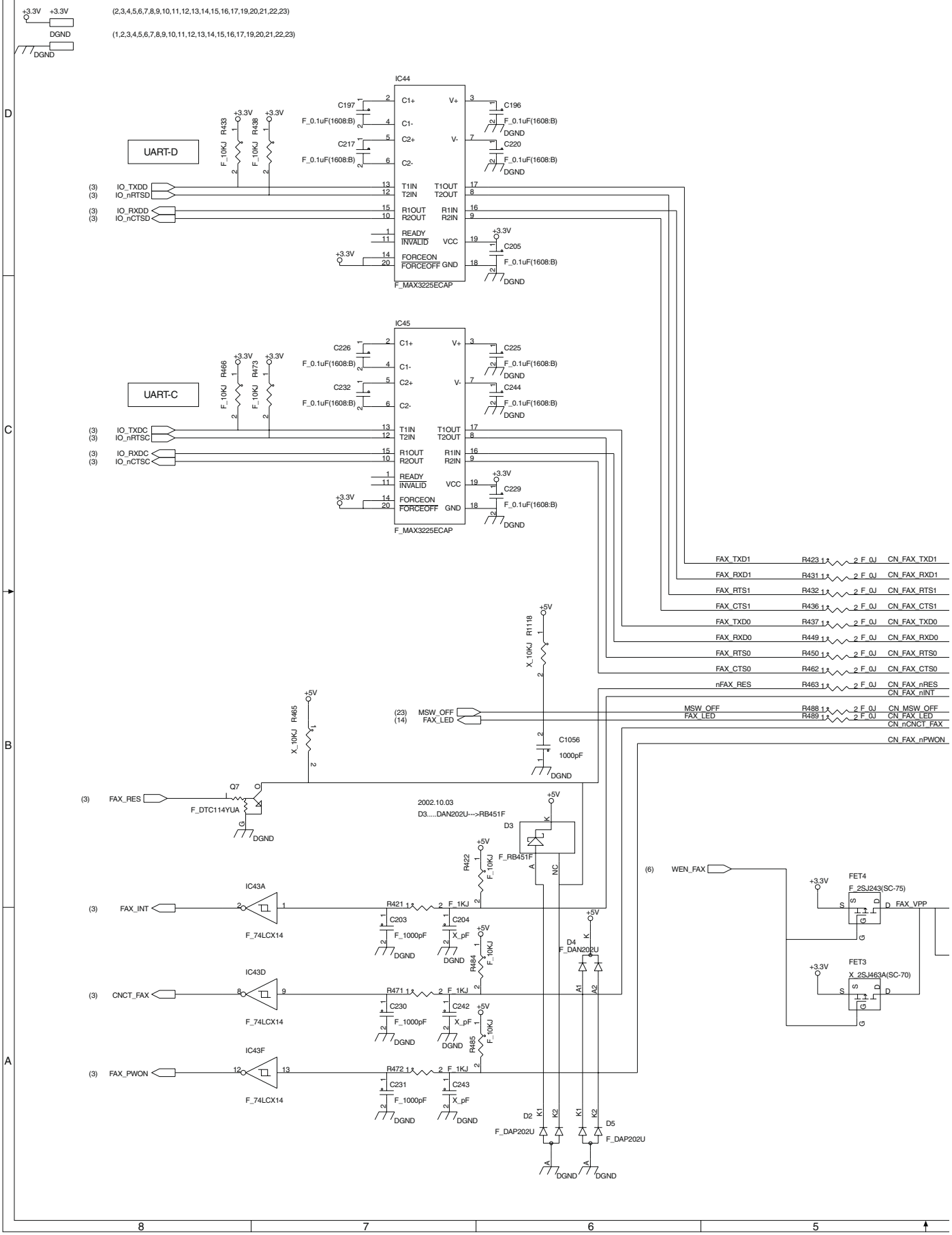

【 FAX 接続コネクタ】

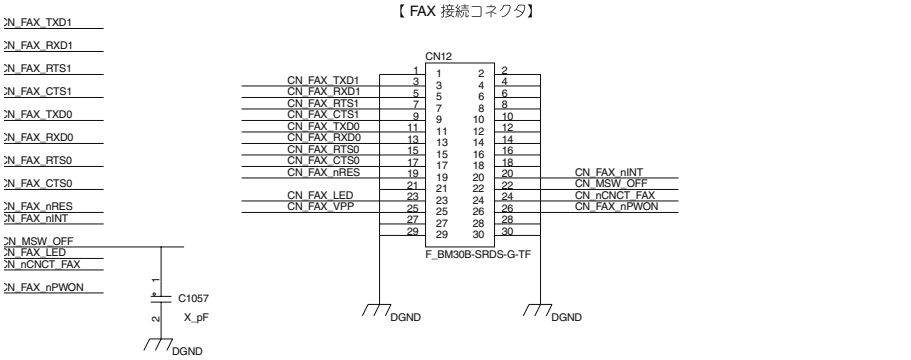
CN_FAX_TXD1
CN_FAX_RXD1
CN_FAX_RTS1
CN_FAX_CTS1
CN_FAX_TXD0
CN_FAX_RXD0
CN_FAX_RTS0
CN_FAX_CTS0
CN_FAX_nRES
CN_FAX_nINT
CN_MSW_OFF
CN_FAX_LED
CN_nCNCT_FAX
CN_FAX_nPWON
C1057
X_pF
DGND
CN12
F_BM30B-SRDS-G-TF
DGND
DGND

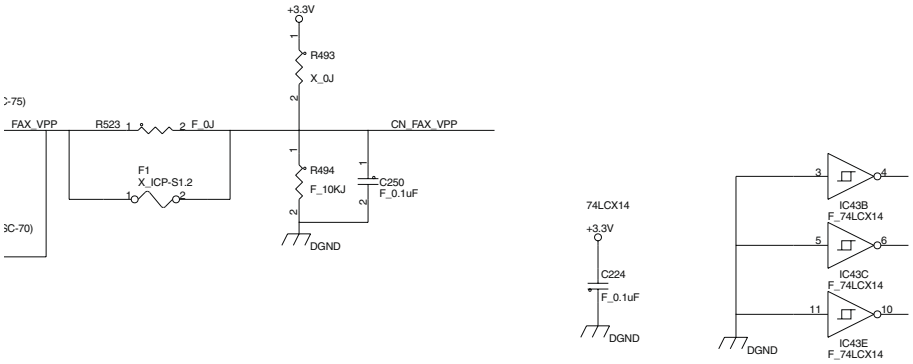
+3.3V
R493
X_0J
FAX_VPP
R523
F_0J
CN_FAX_VPP
F1
X_ICP-S1.2
R494
F_10KJ
C250
F_0.1uF
DGND
74LCX14
+3.3V
C224
F_0.1uF
DGND
IC43B
F_74LCX14
IC43C
F_74LCX14
IC43E
F_74LCX14
DGND

ICU PWB (CPUCLK/DPCLK/DS2CLK)

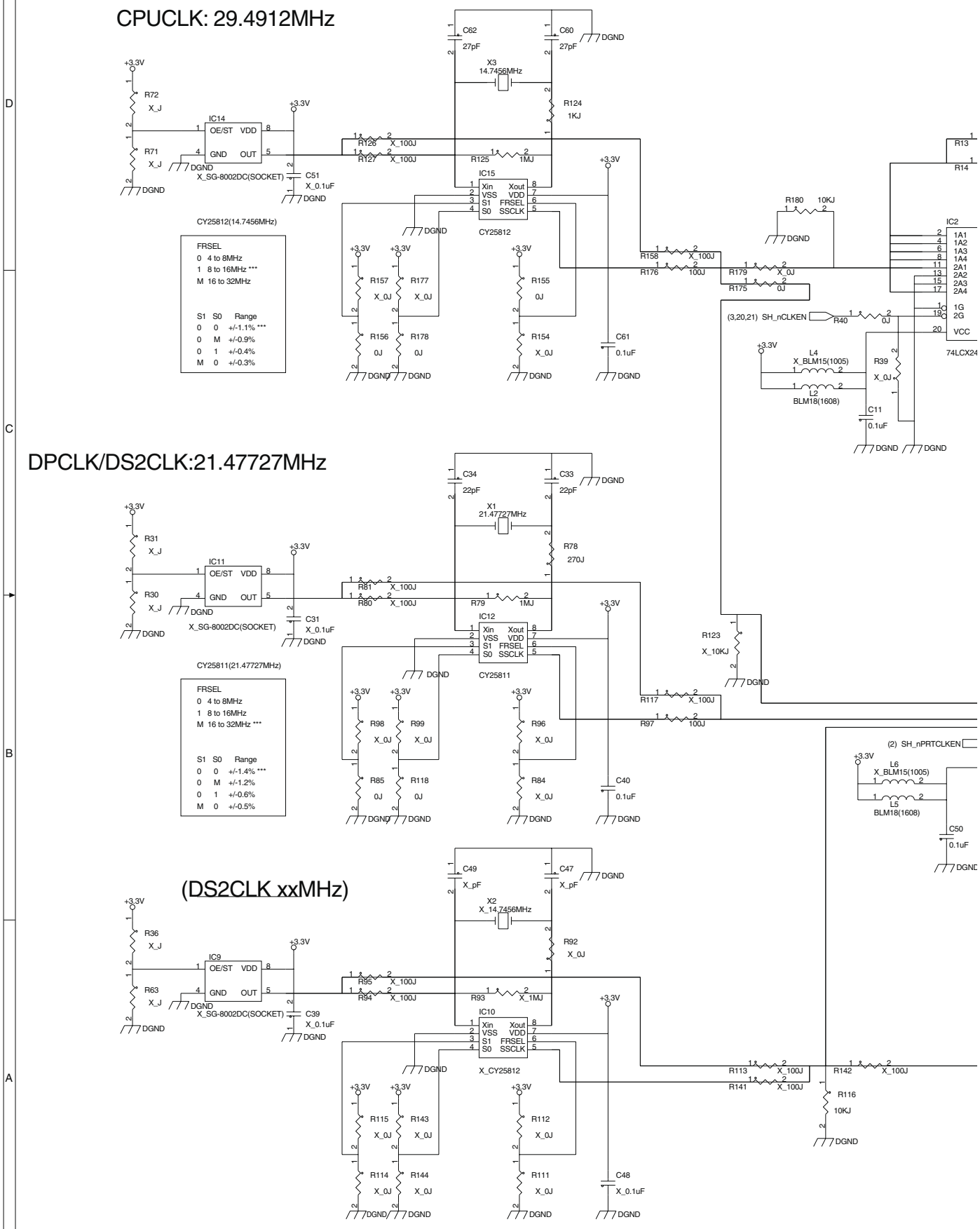

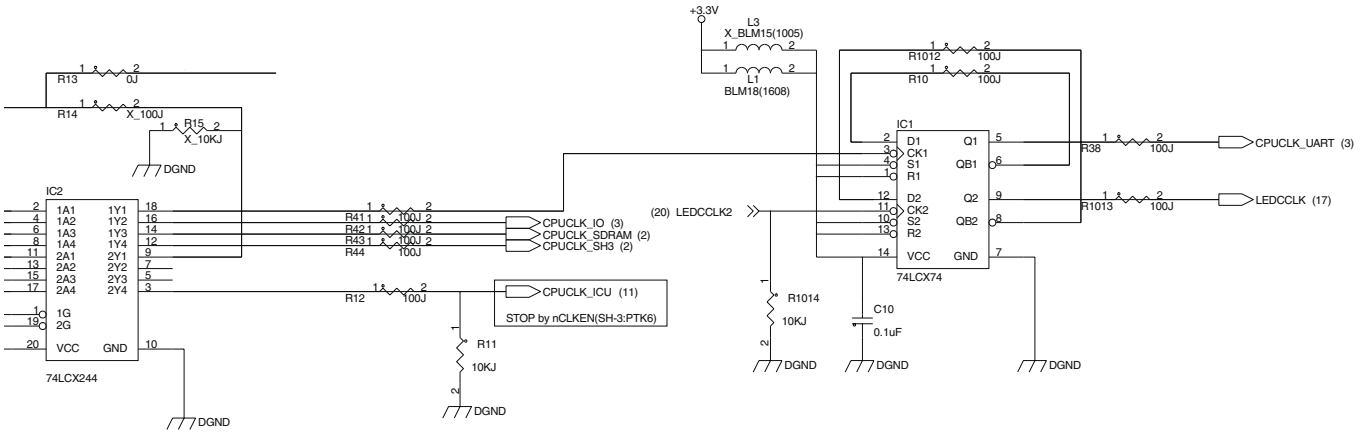

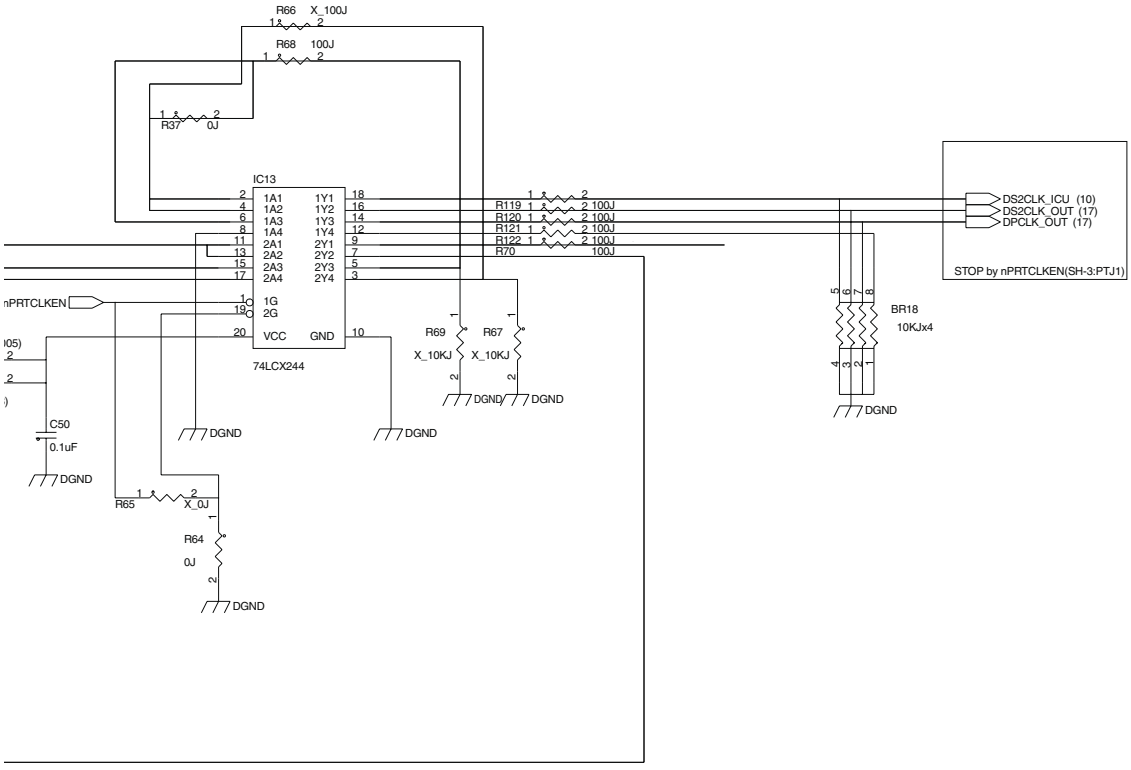

+3.3V +3.3V (2,3,4,5,6,7,8,9,10,11,12,13,14,15,16,17,18,20,21,22,23)

DGND (1,2,3,4,5,6,7,8,9,10,11,12,13,14,15,16,17,18,20,21,22,23)

ICU PWB (SDCLK/SYSCLK/JBIGCLK)

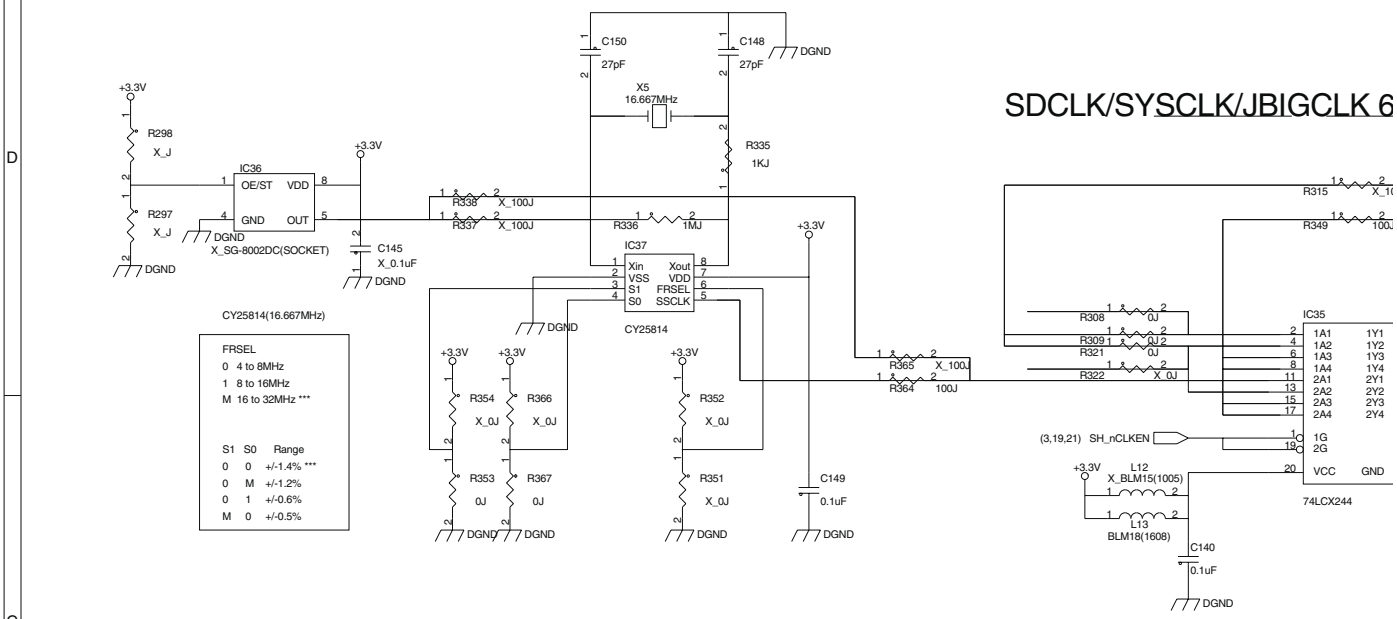

(SYSCLK/JBIGCLK 49.408MHz)

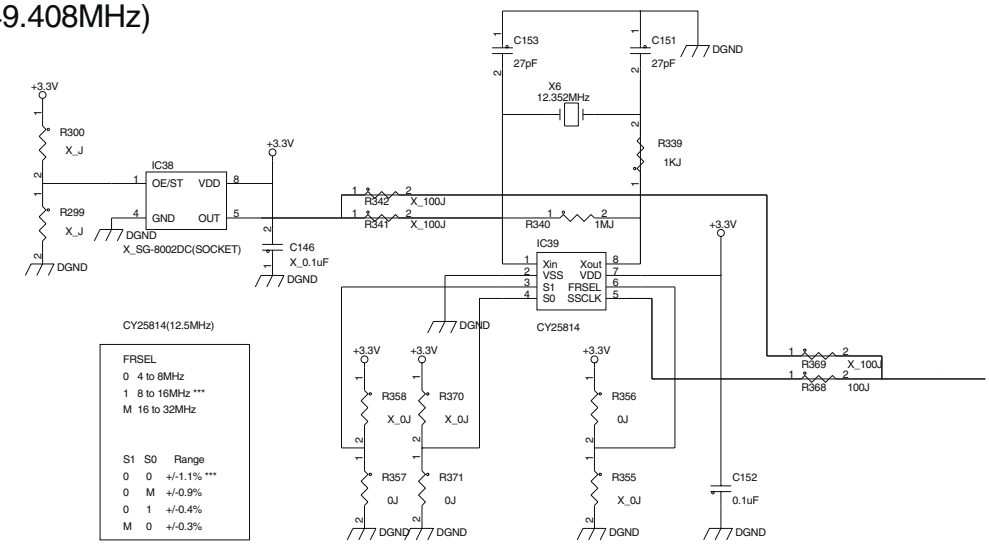

(JBIGCLK xxMHz)

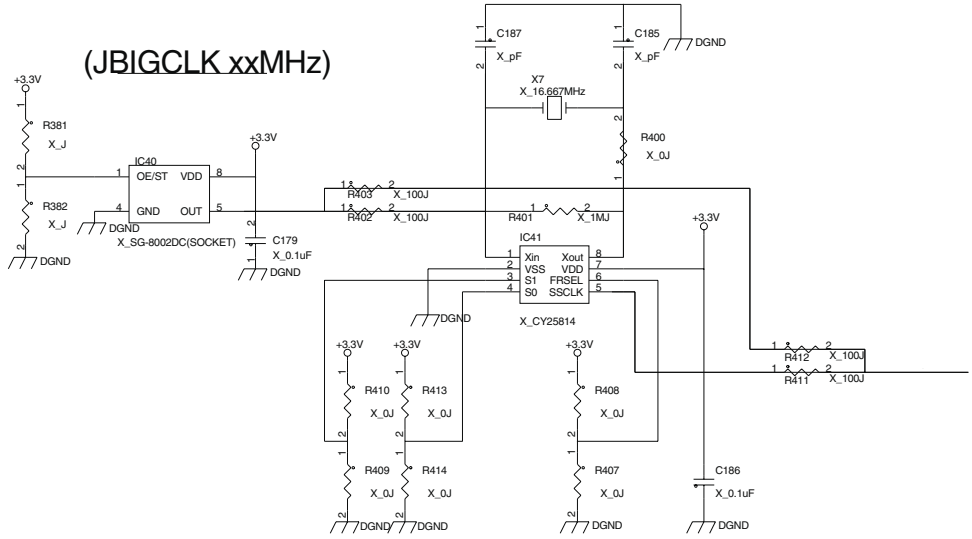

iCLK 66MHz

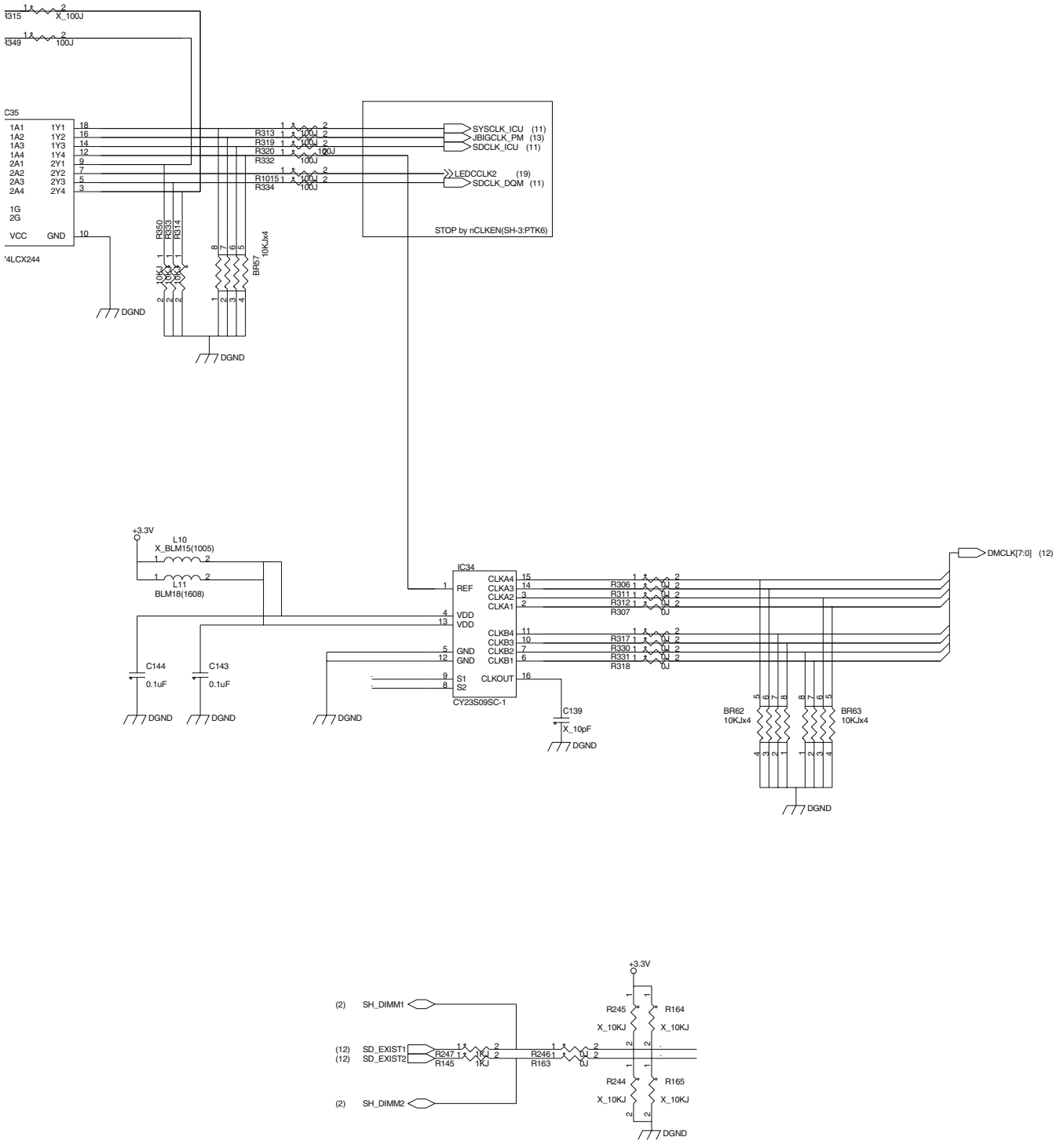
SYSCLK_ICU (11)
JBIGCLK_PM (13)
SDCLK_ICU (11)
LEDCCLK2 (19)
SDCLK_DQM (11)
STOP by nCLKEN(SH-3:PTK6)
DGND
+3.3V
L10
X_BLM15(1005)
L11
BLM18(1608)
C144
0.1uF
C143
0.1uF
IC34
REF
VDD
VDD
GND
GND
S1
S2
CLKOUT
CLKA4
CLKA3
CLKA2
CLKA1
CLKB4
CLKB3
CLKB2
CLKB1
CY23S09SC-1
C139
X_10pF
DMCLK[7:0] (12)
BR62
10KJx4
BR63
10KJx4
(2) SH_DIMM1
(12) SD_EXIST1
(12) SD_EXIST2
(2) SH_DIMM2
R247
R145
1KJ
R246
R163
0J
R245
R164
R244
R165
X_10KJ

ICU PWB (LEDASIC, SYSCLK, SSCI/F)

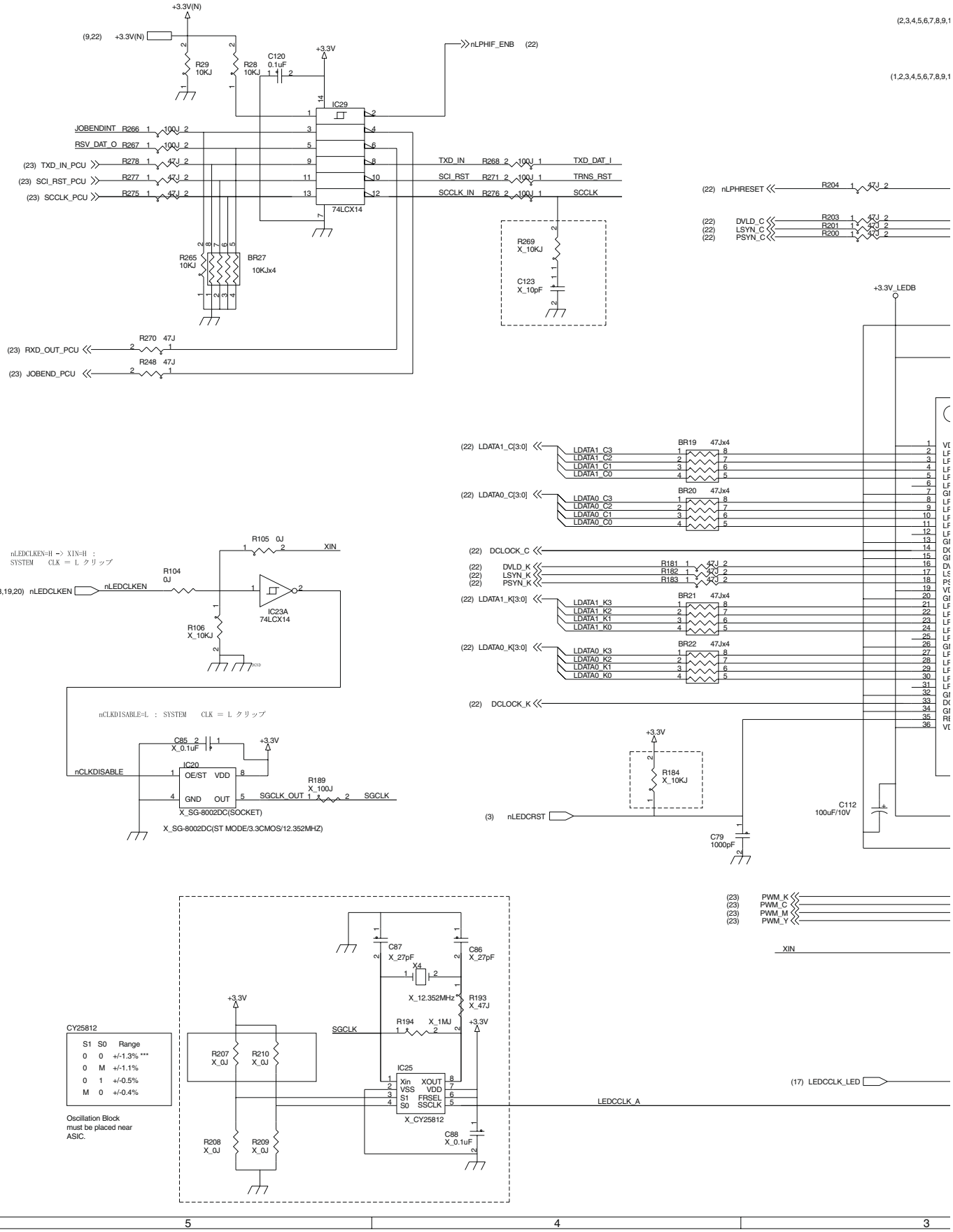

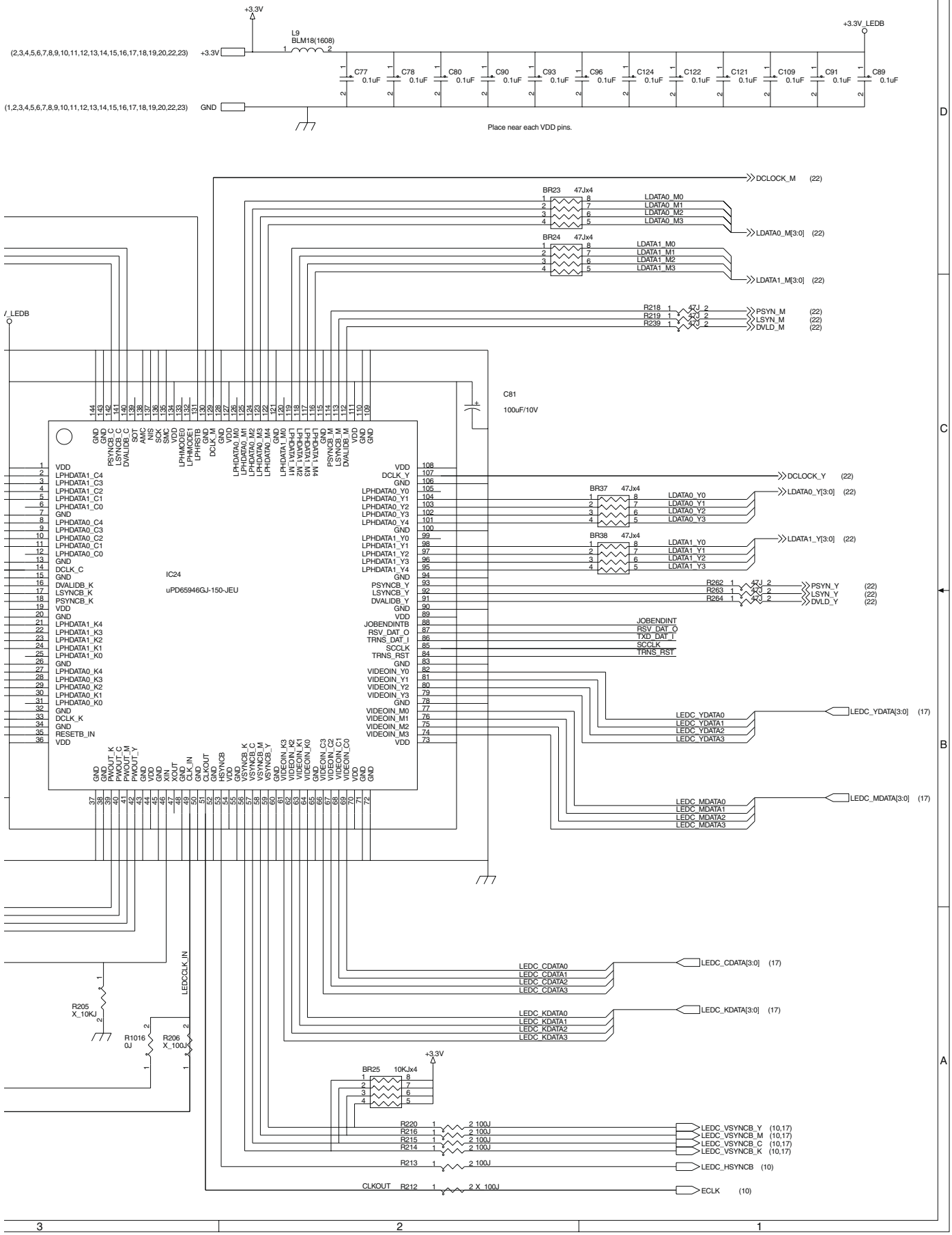
+3.3V
L9
BLM18(1608)
(2,3,4,5,6,7,8,9,10,11,12,13,14,15,16,17,18,19,20,22,23)
+3.3V
+3.3V_LEDB
C77 0.1uF
C78 0.1uF
C80 0.1uF
C90 0.1uF
C93 0.1uF
C96 0.1uF
C124 0.1uF
C122 0.1uF
C121 0.1uF
C109 0.1uF
C91 0.1uF
C89 0.1uF
(1,2,3,4,5,6,7,8,9,10,11,12,13,14,15,16,17,18,19,20,22,23)
GND
Place near each VDD pins.
DCLOCK_M (22)
BR23 47Jx4
LDATA0_M0
LDATA0_M1
LDATA0_M2
LDATA0_M3
LDATA0_M[3:0] (22)
BR24 47Jx4
LDATA1_M0
LDATA1_M1
LDATA1_M2
LDATA1_M3
LDATA1_M[3:0] (22)
/_LEDB
R218 47J
R219 47J
R239 47J
PSYN_M (22)
LSYN_M (22)
DVLD_M (22)
C81
100uF/10V
IC24
uPD65946GJ-150-JEU
DCLOCK_Y (22)
BR37 47Jx4
LDATA0_Y0
LDATA0_Y1
LDATA0_Y2
LDATA0_Y3
LDATA0_Y[3:0] (22)
BR38 47Jx4
LDATA1_Y0
LDATA1_Y1
LDATA1_Y2
LDATA1_Y3
LDATA1_Y[3:0] (22)
R262 47J
R263 47J
R264 47J
PSYN_Y (22)
LSYN_Y (22)
DVLD_Y (22)
JOBENDINT
RSV_DAT_O
TXD_DAT_I
SCCLK
TRNS_RST
LEDC_YDATA0
LEDC_YDATA1
LEDC_YDATA2
LEDC_YDATA3
LEDC_YDATA[3:0] (17)
LEDC_MDATA0
LEDC_MDATA1
LEDC_MDATA2
LEDC_MDATA3
LEDC_MDATA[3:0] (17)
LEDCCLK_IN
R205 X_10KJ
R1016 0J
R206 X_100J
LEDC_CDATA0
LEDC_CDATA1
LEDC_CDATA2
LEDC_CDATA3
LEDC_CDATA[3:0] (17)
LEDC_KDATA0
LEDC_KDATA1
LEDC_KDATA2
LEDC_KDATA3
LEDC_KDATA[3:0] (17)
+3.3V
BR25 10KJx4
R220 2 100J
R216 2 100J
R215 2 100J
R214 2 100J
LEDC_VSYNCB_Y (10,17)
LEDC_VSYNCB_M (10,17)
LEDC_VSYNCB_C (10,17)
LEDC_VSYNCB_K (10,17)
R213 2 100J
LEDC_HSYNCB (10)
CLKOUT
R212 2 X 100J
ECLK (10)

ICU PWB (LPH Connectors)

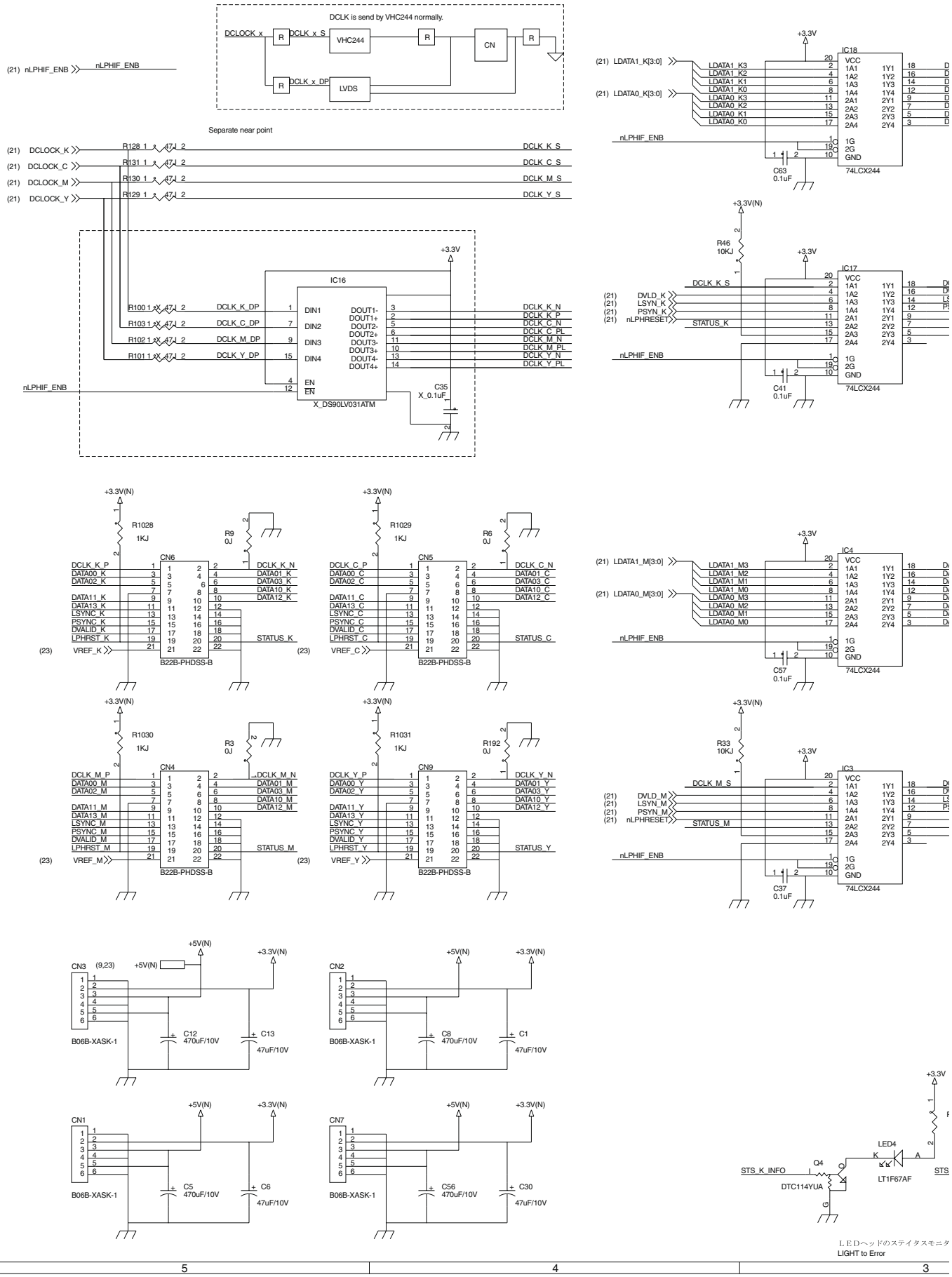

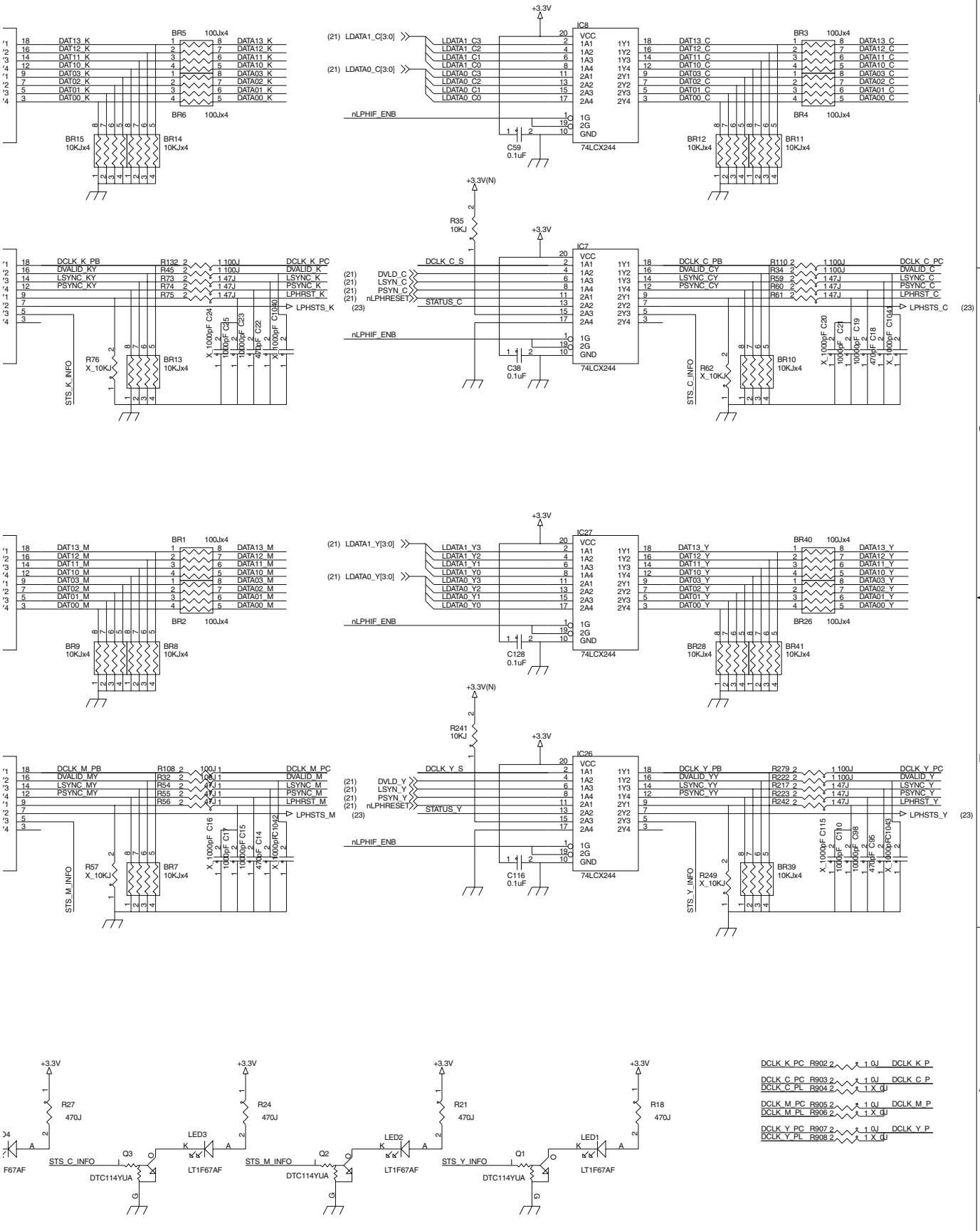
3
2
1
D
C
B
A
+3.3V
+3.3V(N)
IC8
IC7
IC27
IC26
74LCX244
BR5 100Jx4
BR6 100Jx4
BR3 100Jx4
BR4 100Jx4
BR1 100Jx4
BR2 100Jx4
BR40 100Jx4
BR26 100Jx4
BR15 10KJx4
BR14 10KJx4
BR12 10KJx4
BR11 10KJx4
BR9 10KJx4
BR8 10KJx4
BR28 10KJx4
BR41 10KJx4
BR13 10KJx4
BR10 10KJx4
BR7 10KJx4
BR39 10KJx4
DAT13_K
DAT12_K
DAT11_K
DAT10_K
DAT03_K
DAT02_K
DAT01_K
DAT00_K
DATA13_K
DATA12_K
DATA11_K
DATA10_K
DATA03_K
DATA02_K
DATA01_K
DATA00_K
DAT13_C
DAT12_C
DAT11_C
DAT10_C
DAT03_C
DAT02_C
DAT01_C
DAT00_C
DATA13_C
DATA12_C
DATA11_C
DATA10_C
DATA03_C
DATA02_C
DATA01_C
DATA00_C
DAT13_M
DAT12_M
DAT11_M
DAT10_M
DAT03_M
DAT02_M
DAT01_M
DAT00_M
DATA13_M
DATA12_M
DATA11_M
DATA10_M
DATA03_M
DATA02_M
DATA01_M
DATA00_M
DAT13_Y
DAT12_Y
DAT11_Y
DAT10_Y
DAT03_Y
DAT02_Y
DAT01_Y
DAT00_Y
DATA13_Y
DATA12_Y
DATA11_Y
DATA10_Y
DATA03_Y
DATA02_Y
DATA01_Y
DATA00_Y
(21) LDATA1_C[3:0]
(21) LDATA0_C[3:0]
LDATA1_C3
LDATA1_C2
LDATA1_C1
LDATA1_C0
LDATA0_C3
LDATA0_C2
LDATA0_C1
LDATA0_C0
nLPHIF_ENB
C59 0.1uF
DCLK_K_PB
DVALID_KY
LSYNC_KY
PSYNC_KY
DCLK_K_PC
DVALID_K
LSYNC_K
PSYNC_K
LPHRST_K
LPHSTS_K
R132 1 100J
R45 1 100J
R73 1 47J
R74 1 47J
R75 1 47J
STS_K_INFO
R76 X_10KJ
X_1000pF C24
1000pF C25
1000pF C23
470pF C22
X_1000pF C1040
DCLK_C_S
(21) DVLD_C
(21) LSYN_C
(21) PSYN_C
(21) nLPHRESET
(23) STATUS_C
R35 10KJ
C38 0.1uF
DCLK_C_PB
DVALID_CY
LSYNC_CY
PSYNC_CY
DCLK_C_PC
DVALID_C
LSYNC_C
PSYNC_C
LPHRST_C
LPHSTS_C
R110 1 100J
R34 1 100J
R59 1 47J
R60 1 47J
R61 1 47J
STS_C_INFO
R62 X_10KJ
X_1000pF C20
1000pF C21
1000pF C19
470pF C18
X_1000pF C1041
DCLK_M_PB
DVALID_MY
LSYNC_MY
PSYNC_MY
DCLK_M_PC
DVALID_M
LSYNC_M
PSYNC_M
LPHRST_M
LPHSTS_M
R108 100J
R32 1 47J
R54 1 47J
R55 1 47J
R56 1 47J
STS_M_INFO
R57 X_10KJ
X_1000pF C16
1000pF C17
1000pF C15
470pF C14
X_1000pFC1042
DCLK_Y_S
(21) DVLD_Y
(21) LSYN_Y
(21) PSYN_Y
(21) nLPHRESET
(23) STATUS_Y
R241 10KJ
C116 0.1uF
DCLK_Y_PB
DVALID_YY
LSYNC_YY
PSYNC_YY
DCLK_Y_PC
DVALID_Y
LSYNC_Y
PSYNC_Y
LPHRST_Y
LPHSTS_Y
R279 1 100J
R222 1 100J
R217 1 47J
R223 1 47J
R242 1 47J
STS_Y_INFO
R249 X_10KJ
X_1000pF C115
1000pF C110
1000pF C88
470pF C95
X_1000pFC1043
R27 470J
R24 470J
R21 470J
R18 470J
LED3
LED2
LED1
LT1F67AF
STS_C_INFO
STS_M_INFO
STS_Y_INFO
Q3
Q2
Q1
DTC114YUA
DCLK_K_PC R902 1 0J DCLK_K_P
DCLK_C_PC R903 1 0J DCLK_C_P
DCLK_C_PL R904 1 X_0J
DCLK_M_PC R905 1 0J DCLK_M_P
DCLK_M_PL R906 1 X_0J
DCLK_Y_PC R907 1 0J DCLK_Y_P
DCLK_Y_PL R908 1 X_0J

ICU PWB (PWM D/A, PCU I/F)

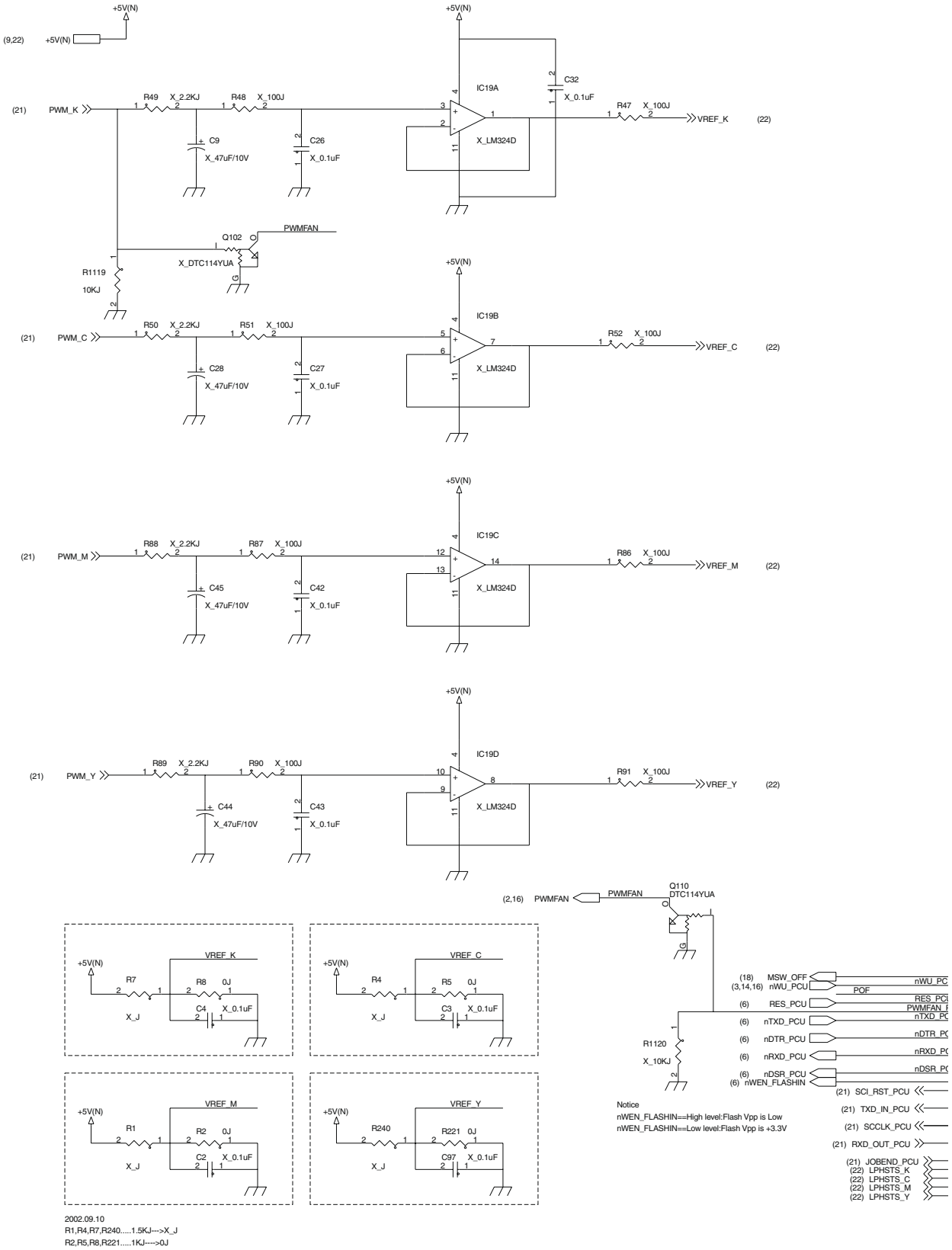

2002.09.10
R1,R4,R7,R240.....1.5KJ--->X_J
R2,R5,R8,R221.....1KJ---->0J

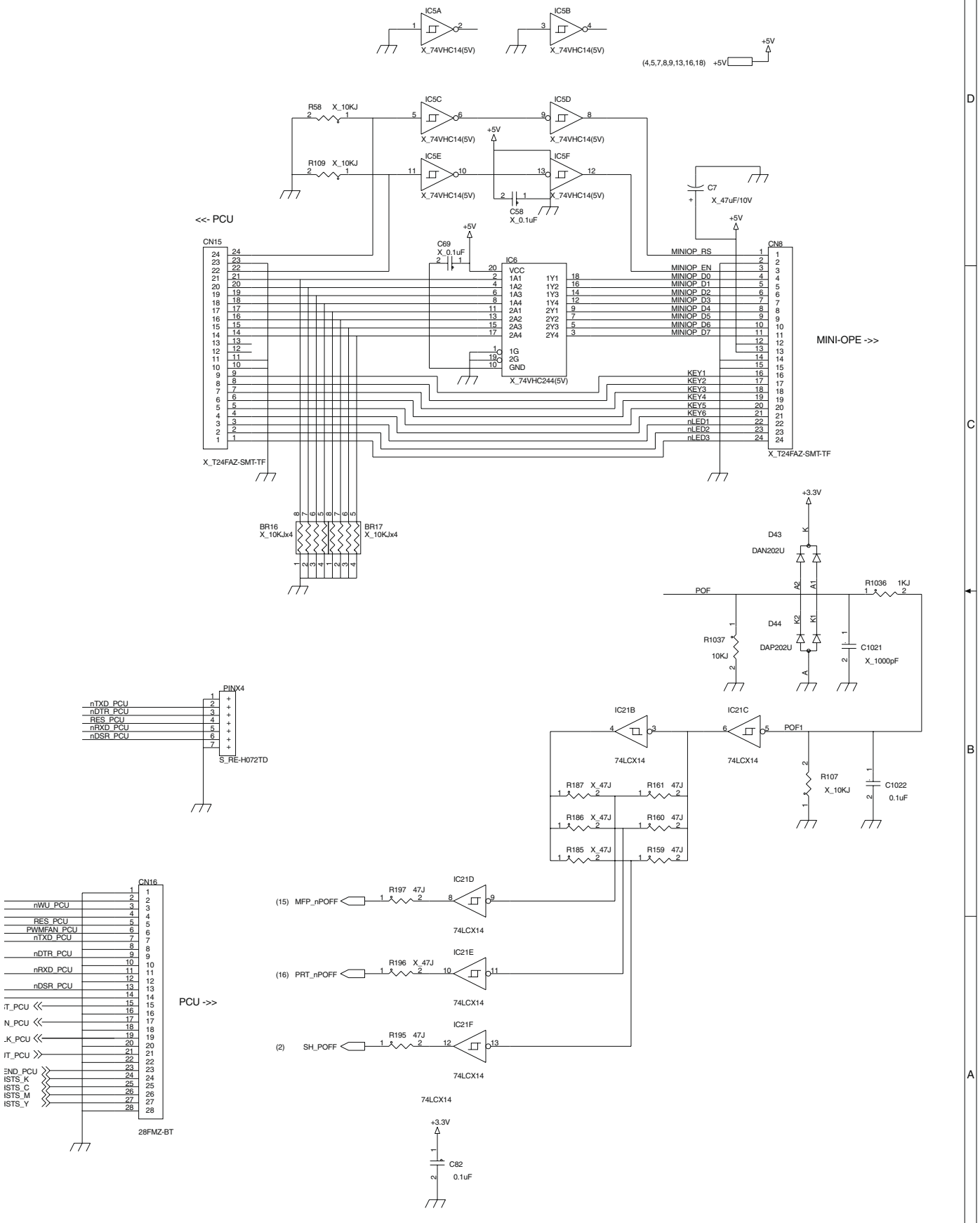
IC5A
IC5B
X_74VHC14(5V)
+5V
(4,5,7,8,9,13,16,18) +5V
R58 X_10KJ
R109 X_10KJ
IC5C
IC5D
IC5E
IC5F
C58
X_0.1uF
C7
X_47uF/10V
<<- PCU
CN15
C69
X_0.1uF
IC6
VCC
1A1 1A2 1A3 1A4 2A1 2A2 2A3 2A4
1Y1 1Y2 1Y3 1Y4 2Y1 2Y2 2Y3 2Y4
1G 2G GND
X_74VHC244(5V)
MINIOP_RS
MINIOP_EN
MINIOP_D0
MINIOP_D1
MINIOP_D2
MINIOP_D3
MINIOP_D4
MINIOP_D5
MINIOP_D6
MINIOP_D7
KEY1
KEY2
KEY3
KEY4
KEY5
KEY6
nLED1
nLED2
nLED3
CN8
MINI-OPE ->>
X_T24FAZ-SMT-TF
BR16 X_10KJx4
BR17 X_10KJx4
+3.3V
D43
DAN202U
POF
R1036 1KJ
D44
DAP202U
R1037 10KJ
C1021 X_1000pF
PINX4
nTXD_PCU
nDTR_PCU
RES_PCU
nRXD_PCU
nDSR_PCU
S_RE-H072TD
IC21B
IC21C
74LCX14
POF1
R107 X_10KJ
C1022 0.1uF
R187 X_47J
R161 47J
R186 X_47J
R160 47J
R185 X_47J
R159 47J
CN16
nWU_PCU
RES_PCU
PWMFAN_PCU
nTXD_PCU
nDTR_PCU
nRXD_PCU
nDSR_PCU
PCU ->>
28FMZ-BT
IC21D
IC21E
IC21F
(15) MFP_nPOFF
(16) PRT_nPOFF
(2) SH_POFF
R197 47J
R196 X_47J
R195 47J
C82
0.1uF

ICU PWB

PARTS LAYOUT / 部品配置図

[PARTS SURFACE / 部品面**]**

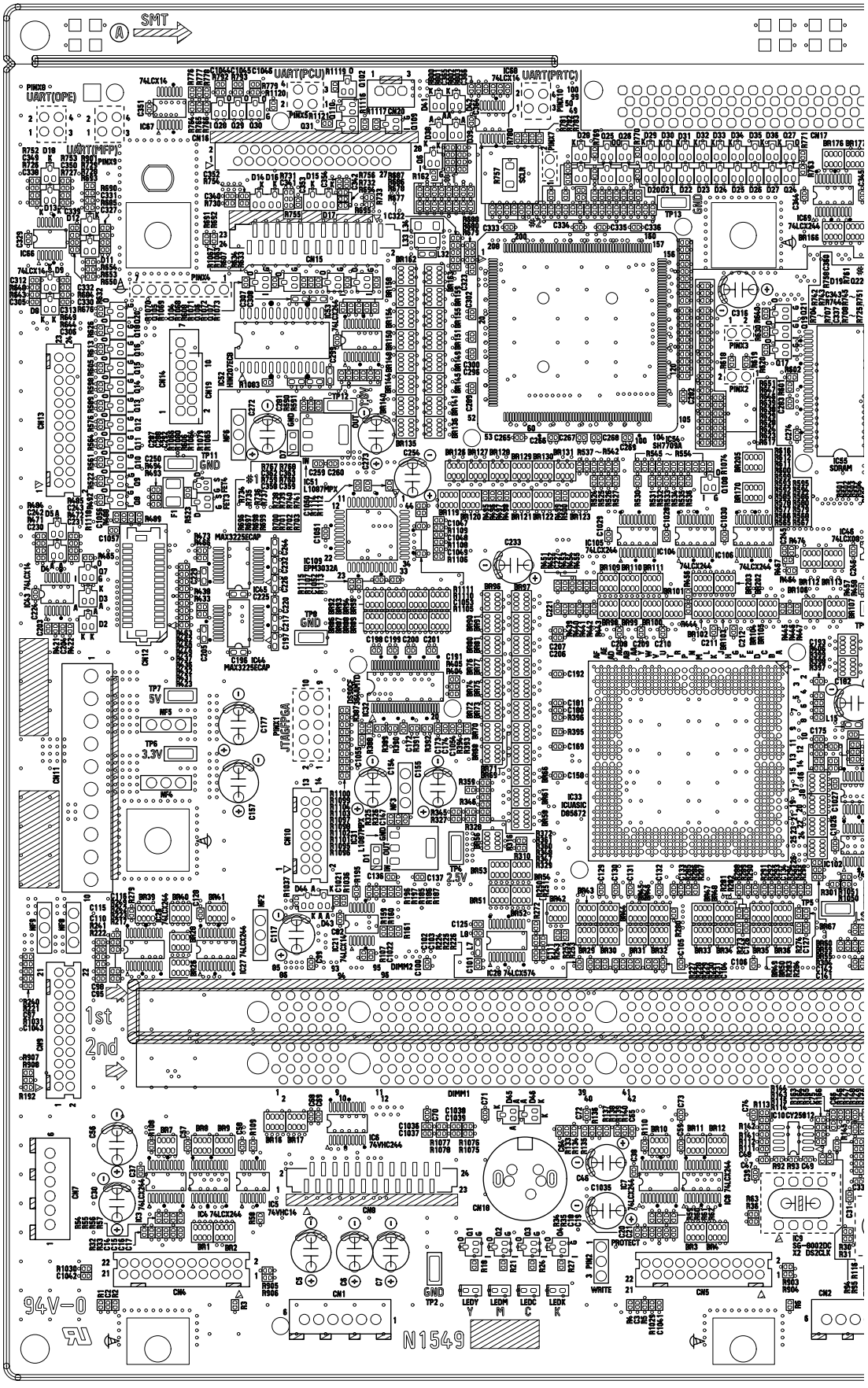

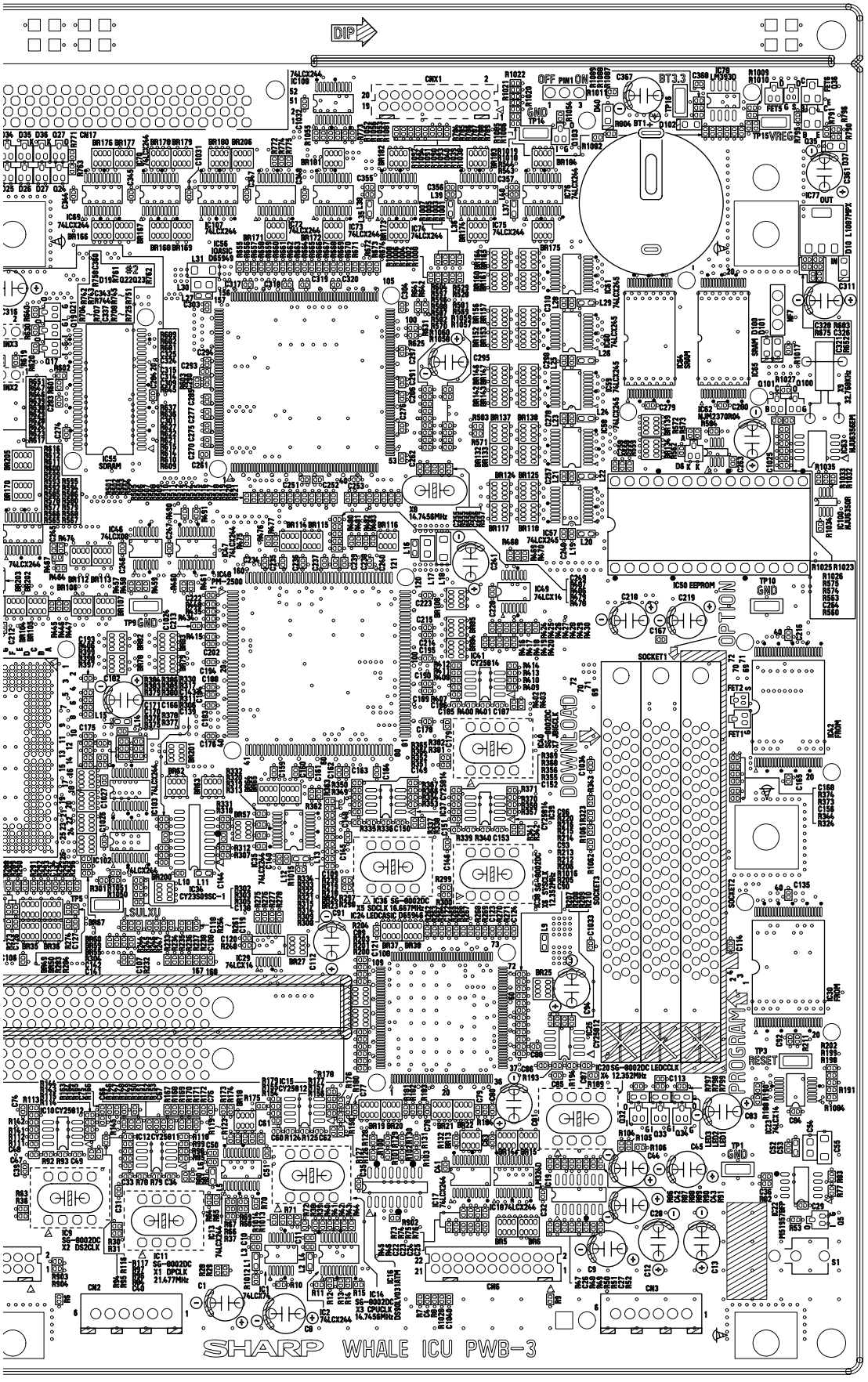
SHARP WHALE ICU PWB-3
DOWNLOAD
PROGRAM
OPTION
SOCKET1
SOCKET2
SOCKET3
IC50 EEPROM
IC51 CY25814
IC52 FROM
IC53 FROM
IC54 FROM
IC55 SDRAM
IC56 LOGIC DES945
IC57 74LCX245
IC58 74LCX16
IC59 74LCX244
IC60 74LCX244
IC61 74LCX244
IC62 74LCX244
IC63 74LCX244
IC64 74LCX244
IC65 74LCX244
IC66 74LCX244
IC67 74LCX244
IC68 74LCX244
IC69 74LCX16
IC70 74LCX244
IC71 74LCX244
IC72 74LCX244
IC73 74LCX244
IC74 74LCX244
IC75 74LCX244
IC76 74LCX244
IC77 OUT
IC78 LA5930
IC79 74LCX244
IC80 74LCX244
IC81 74LCX245
IC82 74LCX245
IC83 74LCX245
IC84 74LCX245
IC85 74LCX245
IC86 74LCX245
IC87 74LCX245
IC88 74LCX245
IC89 74LCX245
IC90 74LCX245
IC91 74LCX245
IC92 74LCX245
IC93 74LCX245
IC94 74LCX245
IC95 74LCX245
IC96 74LCX245
IC97 74LCX245
IC98 74LCX245
IC99 74LCX245
IC100 74LCX244
IC101 NJU6356GR
IC102 74LCX244
IC103 74LCX244
IC104 74LCX244
IC105 74LCX244
IC106 74LCX244
IC107 74LCX244
IC108 74LCX244
IC109 NJU6356GR
IC110 74LCX244
IC111 74LCX244
IC112 74LCX244
IC113 74LCX14
IC114 74LCX14
IC115 CY25812
IC116 74LCX244
IC117 74LCX244
IC118 74LCX244
IC119 74LCX244
IC120 SG-8002DC LEDCCLK
IC121 74LCX244
IC122 74LCX244
IC123 74LCX14
IC124 74LCX244
IC125 74LCX244
IC126 74LCX244
IC127 74LCX244
IC128 74LCX244
IC129 74LCX16
IC130 74LCX244
IC131 74LCX244
IC132 74LCX244
IC133 74LCX244
IC134 74LCX244
IC135 74LCX244
IC136 74LCX244
IC137 74LCX244
IC138 74LCX244
IC139 74LCX244
IC140 74LCX244
IC141 74LCX244
IC142 74LCX244
IC143 74LCX244
IC144 74LCX244
IC145 74LCX244
IC146 74LCX244
IC147 74LCX244
IC148 74LCX244
IC149 74LCX244

C. MFPC2 PWB

MFPC2 PWB (CPU & MEMORY)

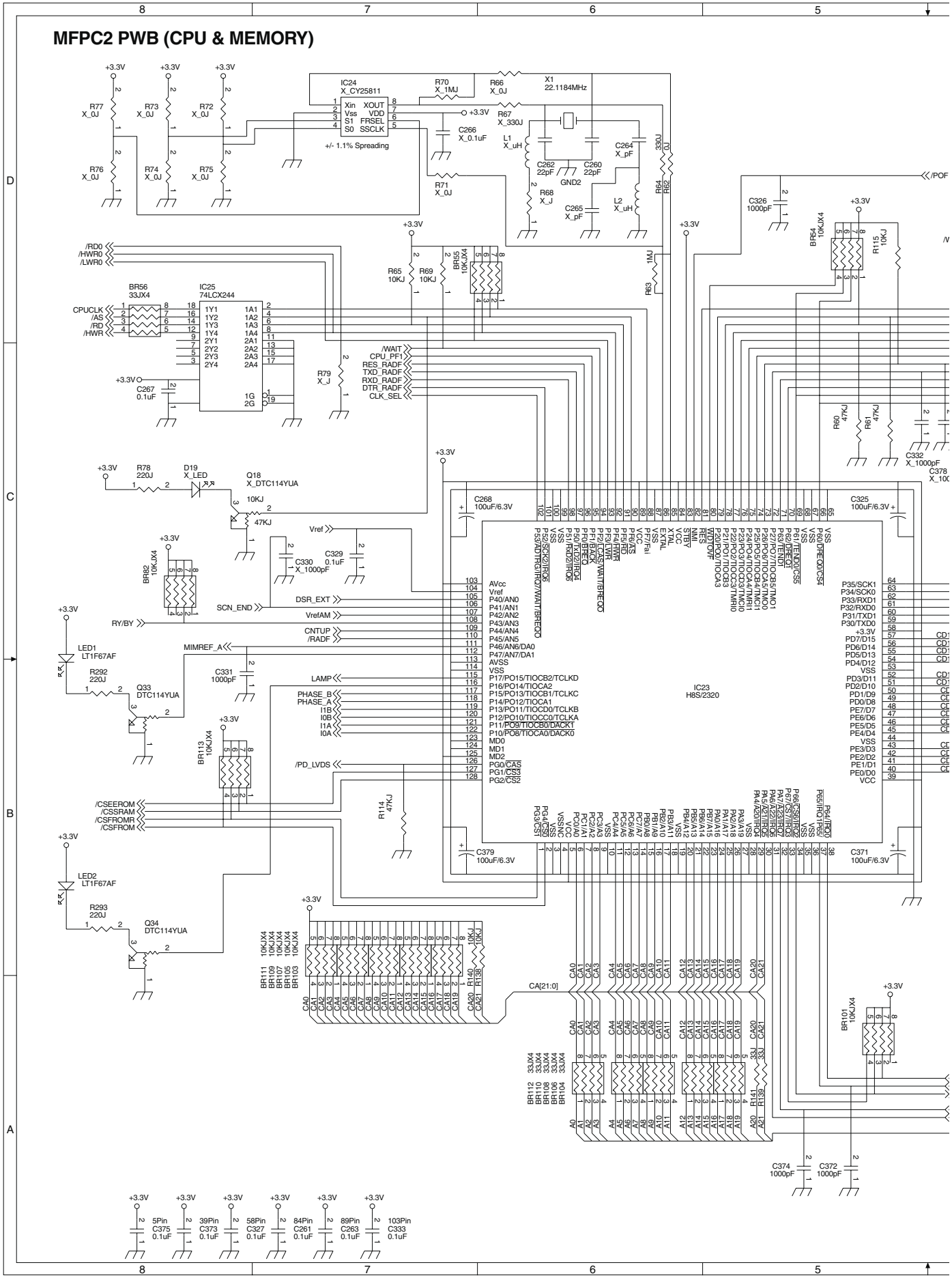

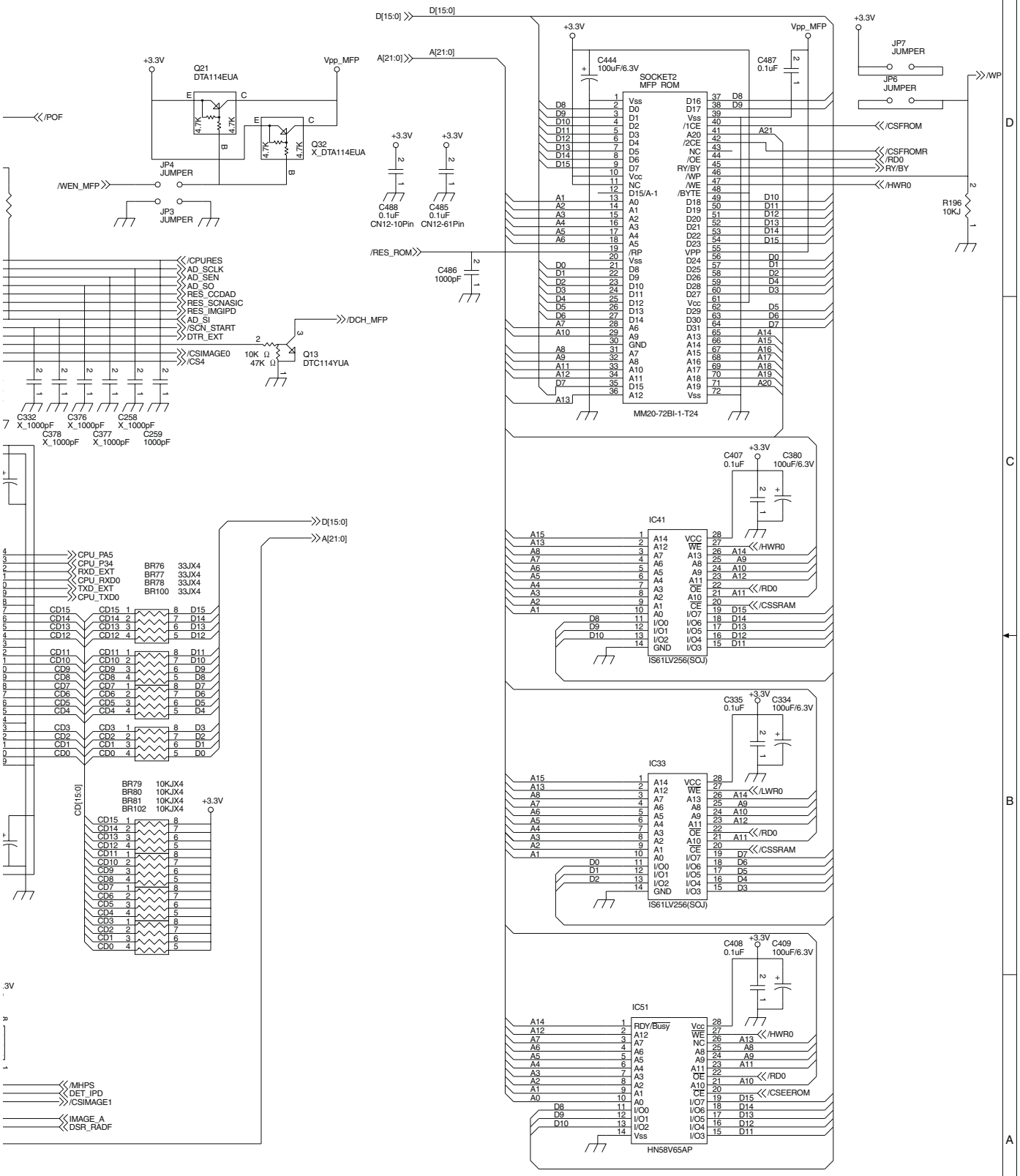
D[15:0]
A[21:0]
+3.3V
Vpp_MFP
Q21
DTA114EUA
Q32
X_DTA114EUA
JP4
JUMPER
JP3
JUMPER
/WEN_MFP
/POF
C488
0.1uF
CN12-10Pin
C485
0.1uF
CN12-61Pin
C444
100uF/6.3V
SOCKET2
MFP ROM
MM20-72BI-1-T24
C487
0.1uF
JP7
JUMPER
JP6
JUMPER
/WP
/CSFROM
/CSFROMR
/RD0
RY/BY
/HWR0
R196
10KJ
/RES_ROM
C486
1000pF
/CPURES
AD_SCLK
AD_SEN
AD_SO
RES_CCDAD
RES_SCNASIC
RES_IMGIPD
AD_SI
/SCN_START
DTR_EXT
/CSIMAGE0
/CS4
/DCH_MFP
10K Ω
47K Ω
Q13
DTC114YUA
C332
X_1000pF
C376
X_1000pF
C258
X_1000pF
C378
X_1000pF
C377
X_1000pF
C259
1000pF
C407
0.1uF
C380
100uF/6.3V
IC41
IS61LV256(SOJ)
/CSSRAM
C335
0.1uF
C334
100uF/6.3V
IC33
/LWR0
C408
0.1uF
C409
100uF/6.3V
IC51
HN58V65AP
/CSEEROM
CPU_PA5
CPU_P34
RXD_EXT
CPU_RXD0
TXD_EXT
CPU_TXD0
BR76 33JX4
BR77 33JX4
BR78 33JX4
BR100 33JX4
BR79 10KJX4
BR80 10KJX4
BR81 10KJX4
BR102 10KJX4
CD[15:0]
/MHPS
DET_IPD
/CSIMAGE1
IMAGE_A
DSR_RADF

MFPC2 PWB (I/O)

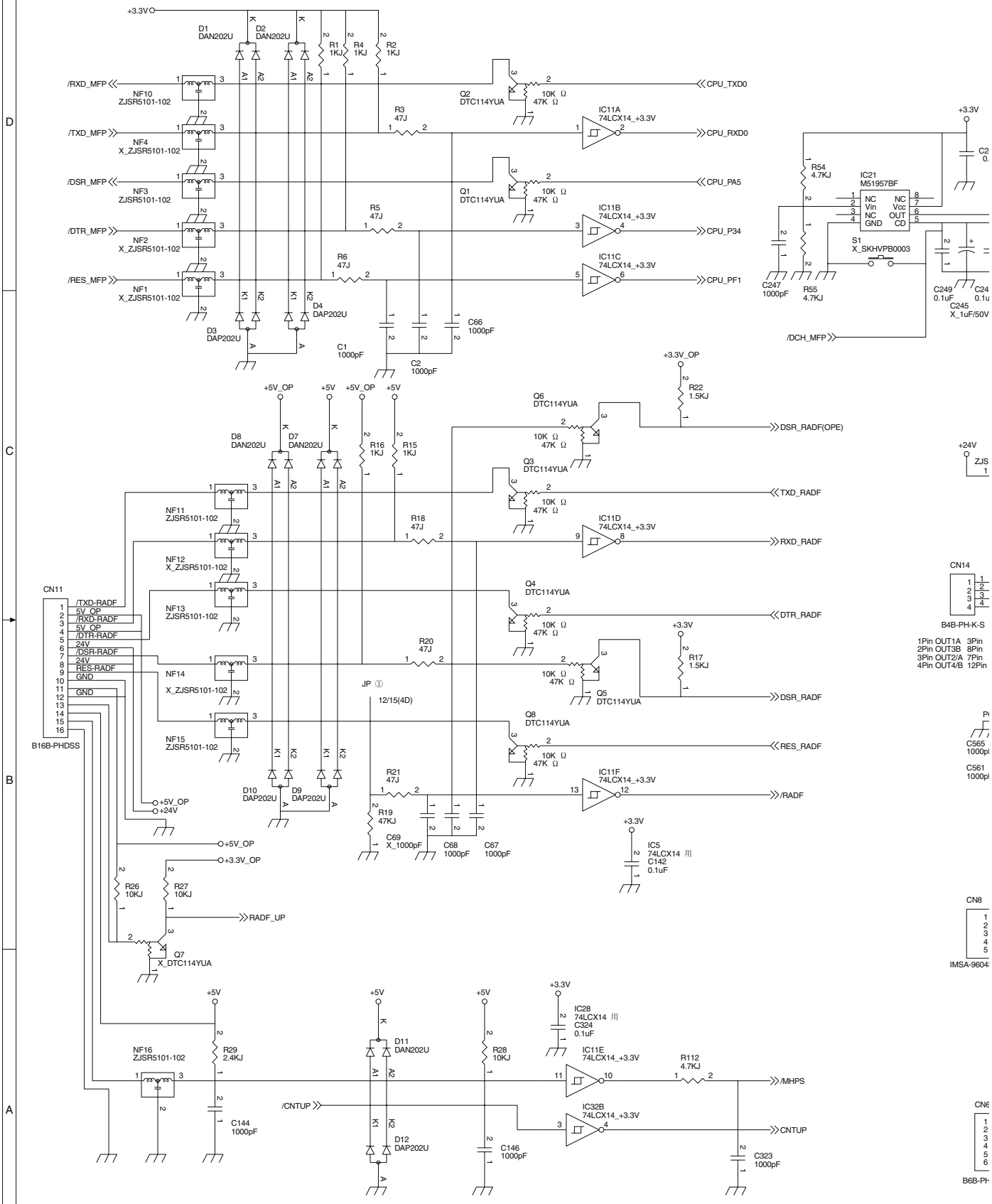
+3.3V
D1 DAN202U
D2 DAN202U
R1 1KJ
R4 1KJ
R2 1KJ
/RXD_MFP
NF10 ZJSR5101-102
Q2 DTC114YUA
10K Ω 47K Ω
CPU_TXD0
/TXD_MFP
NF4 X_ZJSR5101-102
R3 47J
IC11A 74LCX14_+3.3V
CPU_RXD0
/DSR_MFP
NF3 ZJSR5101-102
Q1 DTC114YUA
CPU_PA5
/DTR_MFP
NF2 X_ZJSR5101-102
R5 47J
IC11B 74LCX14_+3.3V
CPU_P34
/RES_MFP
NF1 X_ZJSR5101-102
R6 47J
IC11C 74LCX14_+3.3V
CPU_PF1
D3 DAP202U
D4 DAP202U
C1 1000pF
C2 1000pF
C66 1000pF
R54 4.7KJ
IC21 M51957BF
NC Vin NC GND Vcc OUT CD
S1 X_SKHVPB0003
C247 1000pF
R55 4.7KJ
C249 0.1uF
C245 X_1uF/50V
/DCH_MFP
+5V_OP
D8 DAN202U
D7 DAN202U
R16 1KJ
R15 1KJ
Q6 DTC114YUA
R22 1.5KJ
DSR_RADF(OPE)
Q3 DTC114YUA
TXD_RADF
NF11 ZJSR5101-102
R18 47J
IC11D 74LCX14_+3.3V
RXD_RADF
NF12 X_ZJSR5101-102
CN11
/TXD-RADF
5V_OP
/RXD-RADF
/DTR-RADF
24V
/DSR-RADF
RES-RADF
GND
B16B-PHDSS
NF13 ZJSR5101-102
Q4 DTC114YUA
DTR_RADF
R20 47J
R17 1.5KJ
Q5 DTC114YUA
DSR_RADF
NF14 X_ZJSR5101-102
JP ①
12/15(4D)
NF15 ZJSR5101-102
Q8 DTC114YUA
RES_RADF
D10 DAP202U
D9 DAP202U
R21 47J
IC11F 74LCX14_+3.3V
/RADF
R19 47KJ
C69 X_1000pF
C68 1000pF
C67 1000pF
IC5 74LCX14 用 C142 0.1uF
+24V
R26 10KJ
R27 10KJ
RADF_UP
Q7 X_DTC114YUA
+5V
NF16 ZJSR5101-102
R29 2.4KJ
C144 1000pF
D11 DAN202U
D12 DAP202U
R28 10KJ
C146 1000pF
IC28 74LCX14 用 C324 0.1uF
IC11E 74LCX14_+3.3V
R112 4.7KJ
/MHPS
/CNTUP
IC32B 74LCX14_+3.3V
CNTUP
C323 1000pF
CN14
B4B-PH-K-S
1Pin OUT1A 3Pin
2Pin OUT3B 8Pin
3Pin OUT2/A 7Pin
4Pin OUT4/B 12Pin
CN8
IMSA-9604
B6B-PH

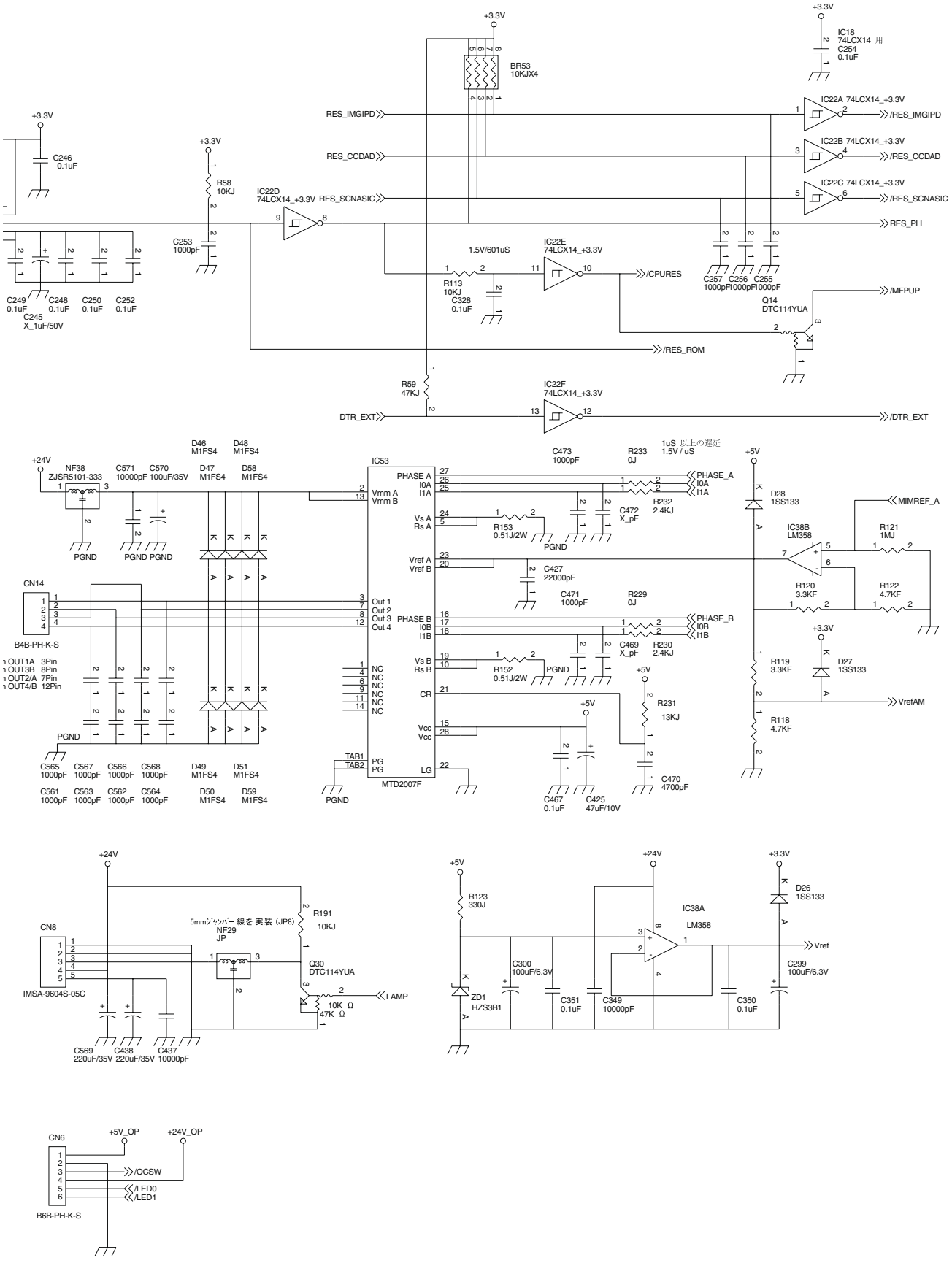
+3.3V
BR53
10KJX4
IC18
74LCX14 用
C254
0.1uF
RES_IMGIPD
RES_CCDAD
RES_SCNASIC
RES_PLL
IC22A 74LCX14_+3.3V
IC22B 74LCX14_+3.3V
IC22C 74LCX14_+3.3V
/RES_IMGIPD
/RES_CCDAD
/RES_SCNASIC
C246
0.1uF
R58
10KJ
IC22D
74LCX14_+3.3V
C253
1000pF
C249
0.1uF
C248
0.1uF
C250
0.1uF
C252
0.1uF
C245
X_1uF/50V
1.5V/601uS
R113
10KJ
C328
0.1uF
IC22E
74LCX14_+3.3V
/CPURES
C257
1000pF
C256
1000pF
C255
1000pF
/MFPUP
Q14
DTC114YUA
/RES_ROM
R59
47KJ
IC22F
74LCX14_+3.3V
DTR_EXT
/DTR_EXT
+24V
NF38
ZJSR5101-333
C571
10000pF
C570
100uF/35V
D46
M1FS4
D48
M1FS4
D47
M1FS4
D58
M1FS4
PGND
PGND PGND
CN14
B4B-PH-K-S
OUT1A 3Pin
OUT3B 8Pin
OUT2/A 7Pin
OUT4/B 12Pin
C565
1000pF
C567
1000pF
C566
1000pF
C568
1000pF
C561
1000pF
C563
1000pF
C562
1000pF
C564
1000pF
D49
M1FS4
D51
M1FS4
D50
M1FS4
D59
M1FS4
IC53
MTD2007F
PHASE A
I0A
I1A
Vmm A
Vmm B
Vs A
Rs A
Vref A
Vref B
PHASE B
I0B
I1B
Vs B
Rs B
CR
Vcc
Vcc
TAB1
TAB2
PG
PG
LG
Out 1
Out 2
Out 3
Out 4
NC
C473
1000pF
R233
0J
1uS 以上の遅延
1.5V / uS
R232
2.4KJ
C472
X_pF
R153
0.51J/2W
C427
22000pF
C471
1000pF
R229
0J
C469
X_pF
R230
2.4KJ
R152
0.51J/2W
R231
13KJ
C470
4700pF
C467
0.1uF
C425
47uF/10V
+5V
D28
1SS133
MIMREF_A
IC38B
LM358
R121
1MJ
R120
3.3KF
R122
4.7KF
D27
1SS133
VrefAM
R119
3.3KF
R118
4.7KF
+24V
CN8
IMSA-9604S-05C
5mmジャンパー線を実装 (JP8)
NF29
JP
R191
10KJ
Q30
DTC114YUA
LAMP
10K Ω
47K Ω
C569
220uF/35V
C438
220uF/35V
C437
10000pF
+5V
R123
330J
ZD1
HZS3B1
C300
100uF/6.3V
C351
0.1uF
C349
10000pF
C350
0.1uF
IC38A
LM358
+24V
+3.3V
D26
1SS133
Vref
C299
100uF/6.3V
CN6
B6B-PH-K-S
+5V_OP
+24V_OP
/OCSW
/LED0
/LED1

MFPC2 PWB (I/O)

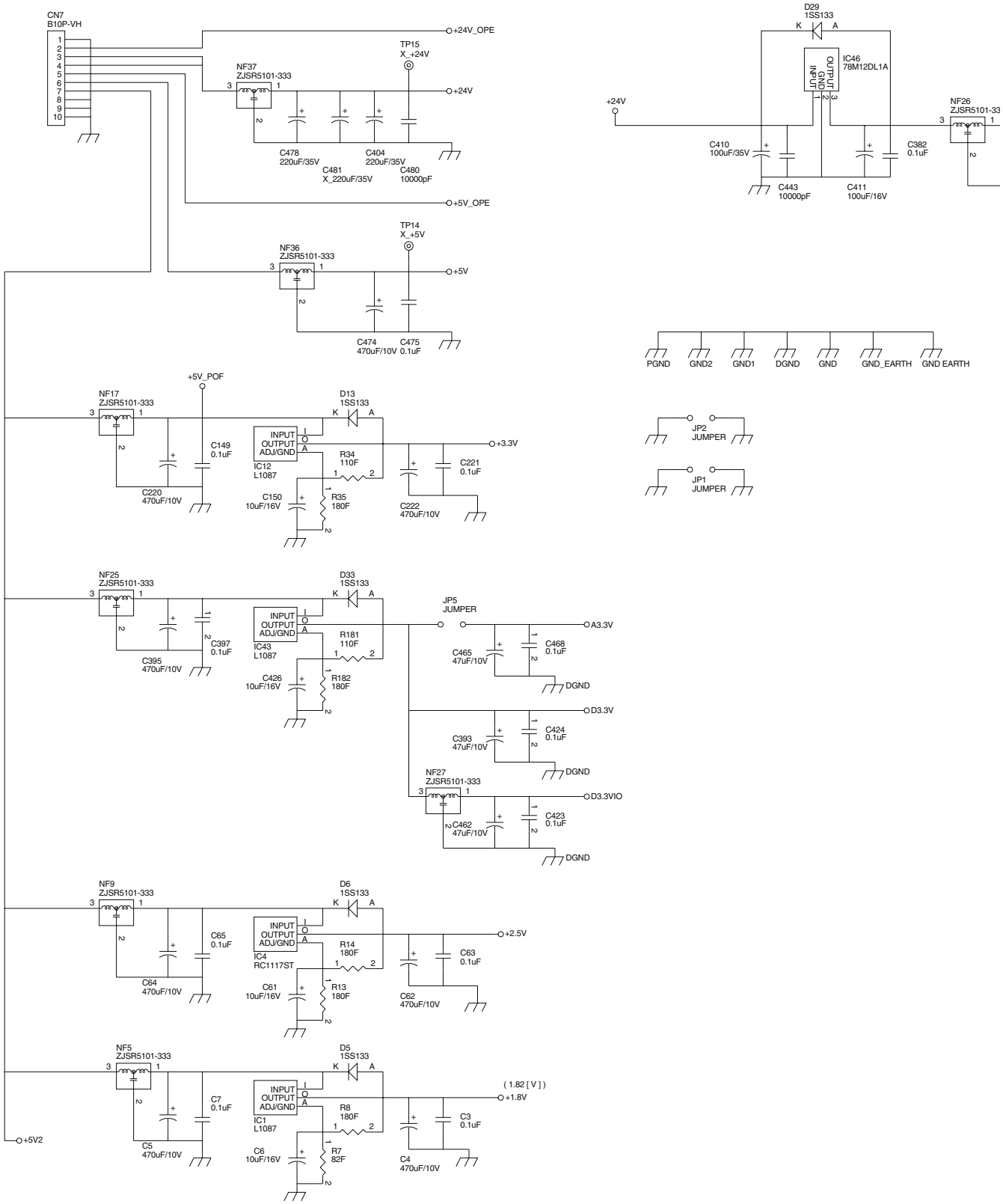
CN7
B10P-VH
+24V_OPE
TP15
X_+24V
NF37
ZJSR5101-333
+24V
C478
220uF/35V
C404
220uF/35V
C481
X_220uF/35V
C480
10000pF
+5V_OPE
TP14
X_+5V
NF36
ZJSR5101-333
+5V
C474
470uF/10V
C475
0.1uF
D29
1SS133
IC46
78M12DL1A
+24V
NF26
ZJSR5101-333
C410
100uF/35V
C382
0.1uF
C443
10000pF
C411
100uF/16V
PGND
GND2
GND1
DGND
GND
GND_EARTH
GND EARTH
JP2
JUMPER
JP1
JUMPER
+5V_POF
NF17
ZJSR5101-333
D13
1SS133
INPUT
OUTPUT
ADJ/GND
IC12
L1087
+3.3V
C149
0.1uF
R34
110F
C221
0.1uF
C220
470uF/10V
C150
10uF/16V
R35
180F
C222
470uF/10V
NF25
ZJSR5101-333
D33
1SS133
JP5
JUMPER
A3.3V
IC43
L1087
C397
0.1uF
R181
110F
C465
47uF/10V
C468
0.1uF
C395
470uF/10V
C426
10uF/16V
R182
180F
DGND
D3.3V
C393
47uF/10V
C424
0.1uF
DGND
NF27
ZJSR5101-333
D3.3VIO
C462
47uF/10V
C423
0.1uF
DGND
NF9
ZJSR5101-333
D6
1SS133
IC4
RC1117ST
+2.5V
C65
0.1uF
R14
180F
C63
0.1uF
C64
470uF/10V
C61
10uF/16V
R13
180F
C62
470uF/10V
NF5
ZJSR5101-333
D5
1SS133
(1.82 [V])
+1.8V
IC1
L1087
C7
0.1uF
R8
180F
C3
0.1uF
+5V2
C5
470uF/10V
C6
10uF/16V
R7
82F
C4
470uF/10V

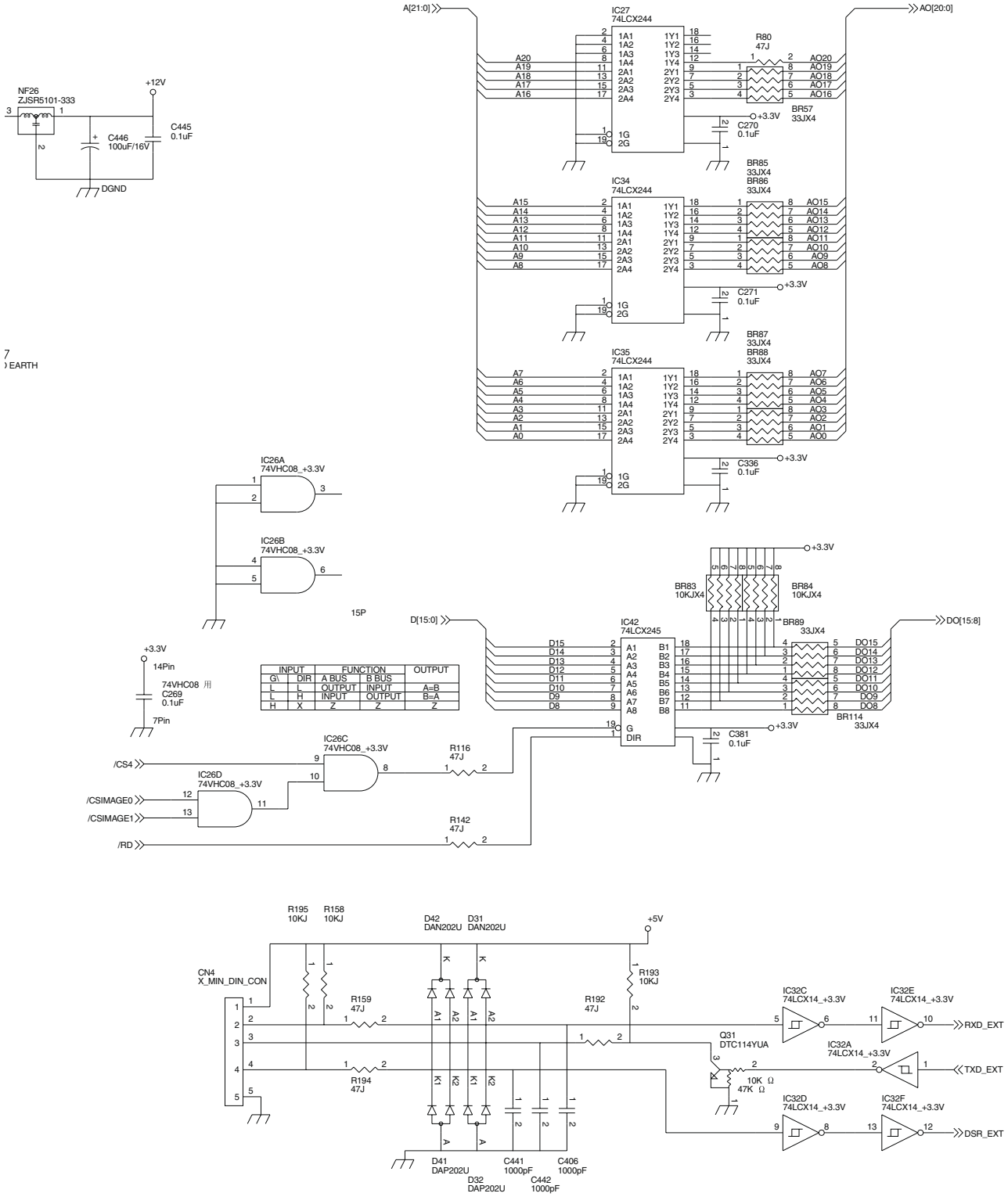

INPUT		FUNCTION		OUTPUT
G\	DIR	A BUS	B BUS	
L	L	OUTPUT	INPUT	A=B
L	H	INPUT	OUTPUT	B=A
H	X	Z	Z	Z

MFPC2 PWB (CCD A/D)

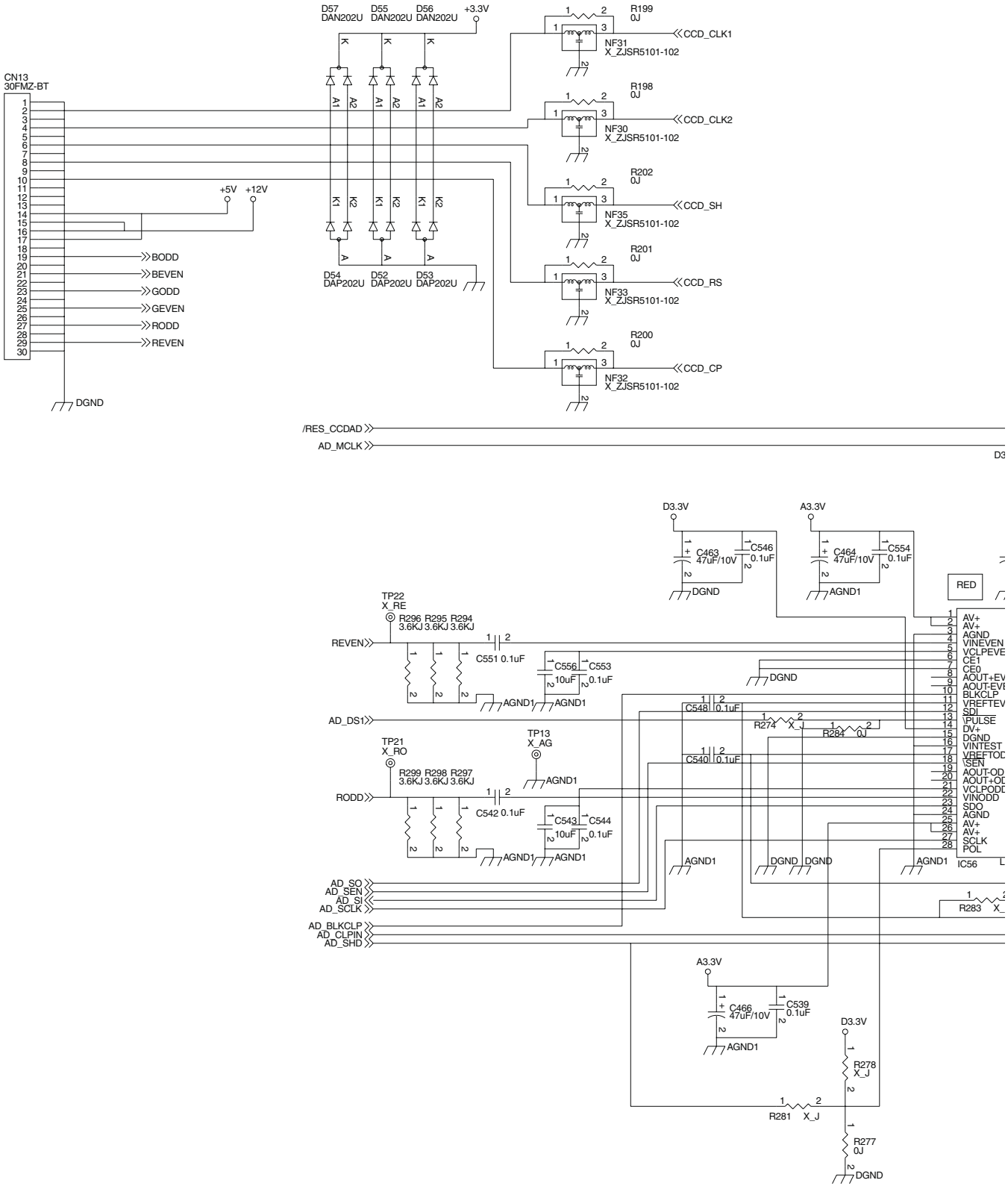

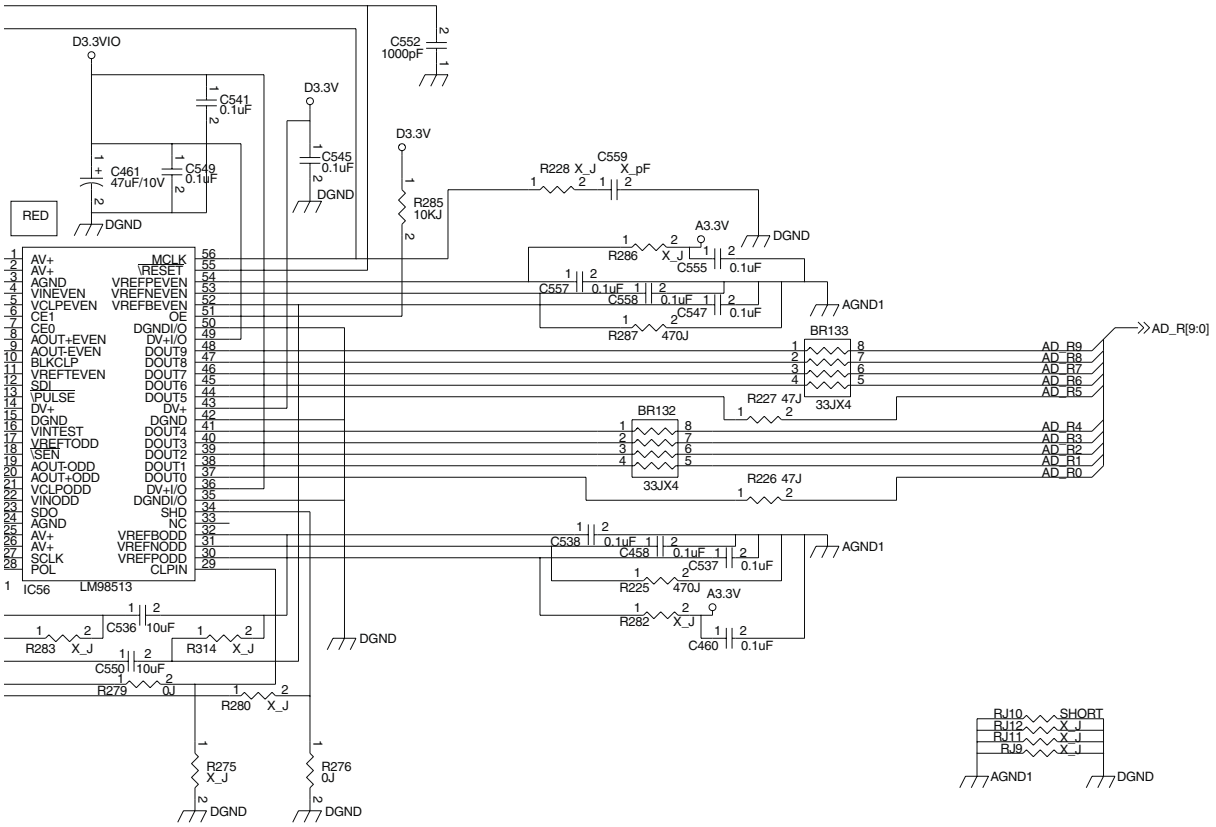
D3.3VIO
C552 1000pF
C541 0.1uF
D3.3V
C461 47uF/10V
C549 0.1uF
C545 0.1uF
DGND
RED
R285 10KJ
R228 X_J
C559 X_pF
A3.3V
R286 X_J
C555 0.1uF
C557 0.1uF
C558 0.1uF
C547 0.1uF
AGND1
R287 470J
BR133
33JX4
AD_R[9:0]
AD_R9
AD_R8
AD_R7
AD_R6
AD_R5
R227 47J
BR132
33JX4
AD_R4
AD_R3
AD_R2
AD_R1
AD_R0
R226 47J
C538 0.1uF
C458 0.1uF
C537 0.1uF
R225 470J
R282 X_J
C460 0.1uF
AV+
AV+
AGND
VINEVEN
VCLPEVEN
CE1
CE0
AOUT+EVEN
AOUT-EVEN
BLKCLP
VREFTEVEN
SDI
!PULSE
DV+
DGND
VINTEST
VREFTODD
!SEN
AOUT-ODD
AOUT+ODD
VCLPODD
VINODD
SDO
AGND
AV+
AV+
SCLK
POL
MCLK
!RESET
VREFPEVEN
VREFNEVEN
VREFBEVEN
OE
DGNDI/O
DV+I/O
DOUT9
DOUT8
DOUT7
DOUT6
DOUT5
DV+
DGND
DOUT4
DOUT3
DOUT2
DOUT1
DOUT0
DV+I/O
DGNDI/O
SHD
NC
VREFBODD
VREFNODD
VREFPODD
CLPIN
IC56 LM98513
C536 10uF
R283 X_J
R314 X_J
C550 10uF
R279 0J
R280 X_J
R275 X_J
R276 0J
RJ10 SHORT
RJ12 X_J
RJ11 X_J
RJ9 X_J

MFPC2 PWB (CCD A/D)

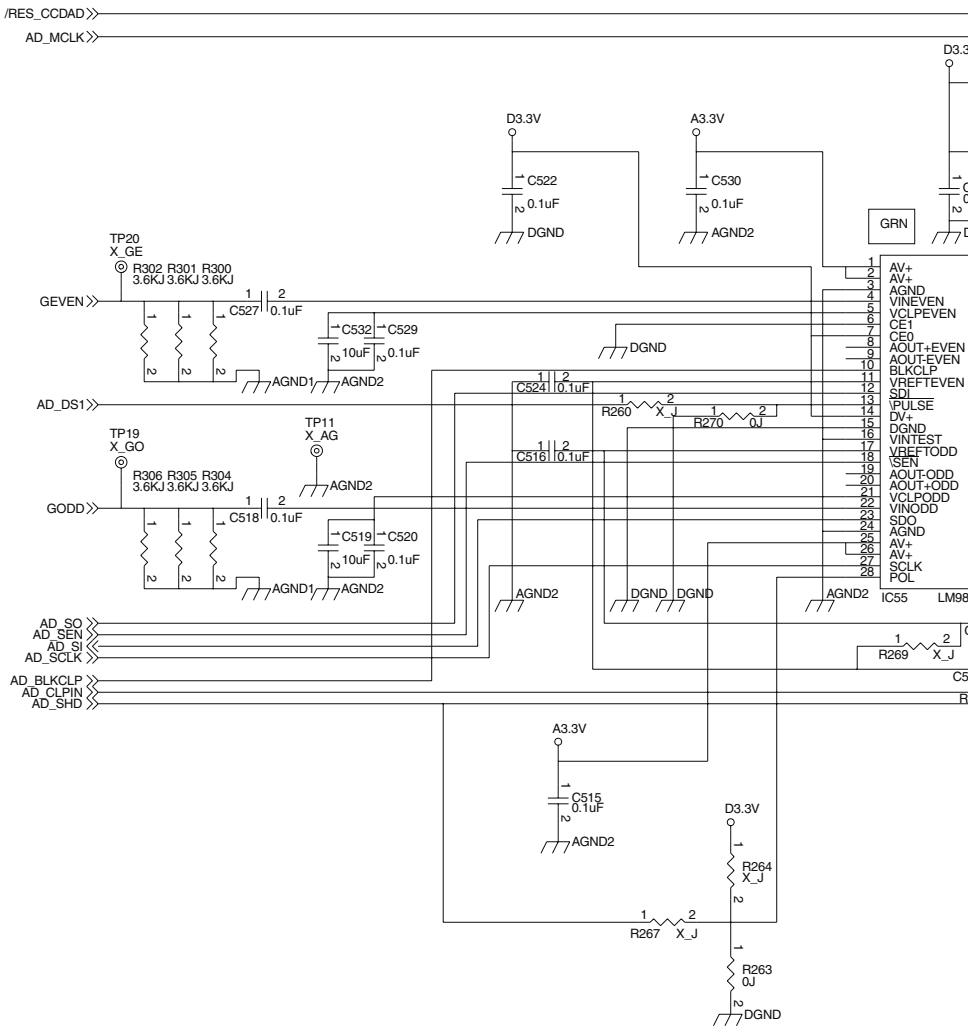

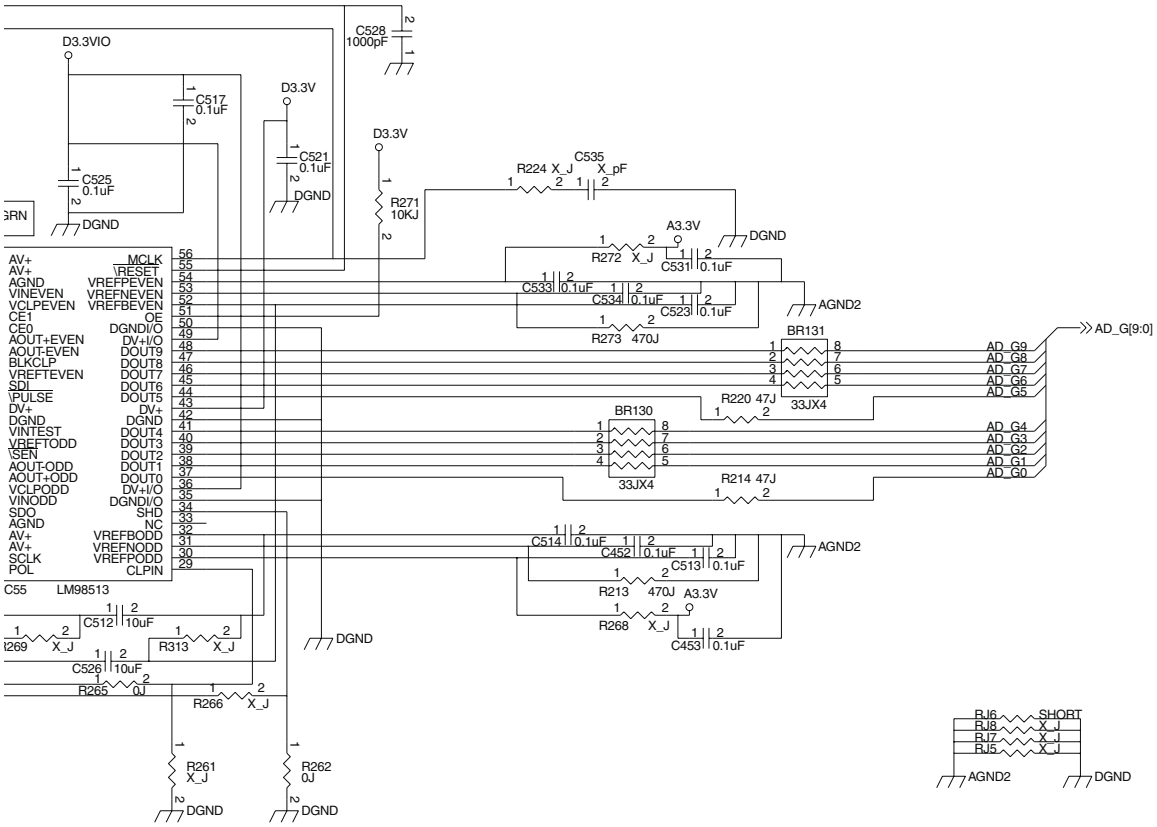
D3.3VIO
C528 1000pF
C517 0.1uF
D3.3V
C521 0.1uF
C525 0.1uF
DGND
R271 10KJ
C535 X_pF
R224 X_J
A3.3V
R272 X_J
C531 0.1uF
C533 0.1uF
C534 0.1uF
C523 0.1uF
AGND2
R273 470J
BR131
AD_G[9:0]
AD_G9
AD_G8
AD_G7
AD_G6
AD_G5
R220 47J
33JX4
BR130
AD_G4
AD_G3
AD_G2
AD_G1
AD_G0
R214 47J
C514 0.1uF
C452 0.1uF
C513 0.1uF
R213 470J
R268 X_J
C453 0.1uF
AV+
AGND
VINEVEN
VCLPEVEN
CE1
CE0
AOUT+EVEN
AOUT-EVEN
BLKCLP
VREFTEVEN
SDI
\PULSE
DV+
DGND
VINTEST
VREFTODD
\SEN
AOUT-ODD
AOUT+ODD
VCLPODD
VINODD
SDO
SCLK
POL
MCLK
\RESET
VREFPEVEN
VREFNEVEN
VREFBEVEN
OE
DGNDI/O
DV+I/O
DOUT9
DOUT8
DOUT7
DOUT6
DOUT5
DOUT4
DOUT3
DOUT2
DOUT1
DOUT0
DV+I/O
DGNDI/O
SHD
NC
VREFBODD
VREFNODD
VREFPODD
CLPIN
LM98513
C512 10uF
C526 10uF
R265 0J
R266 X_J
R313 X_J
R261 X_J
R262 0J
RJ6 SHORT
RJ8 X_J
RJ7 X_J
RJ5 X_J

MFPC2 PWB (CCD A/D)

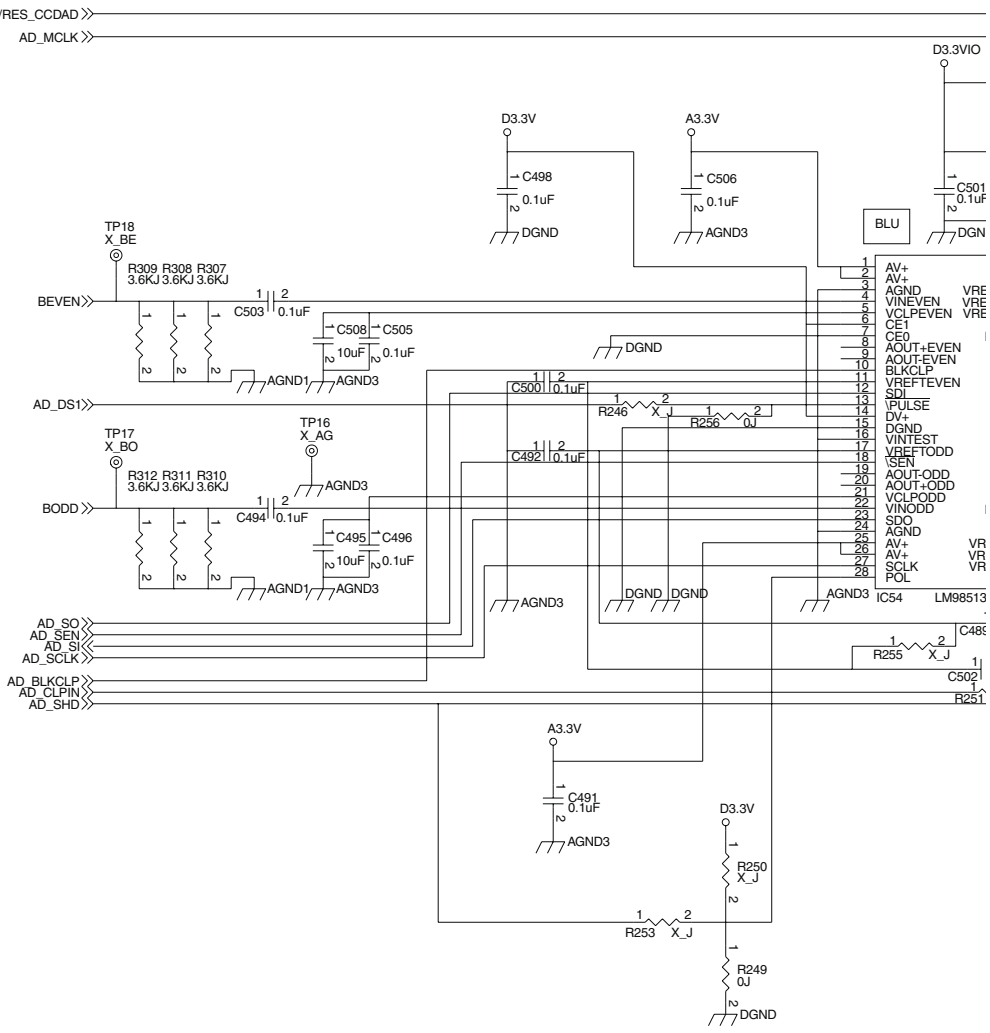

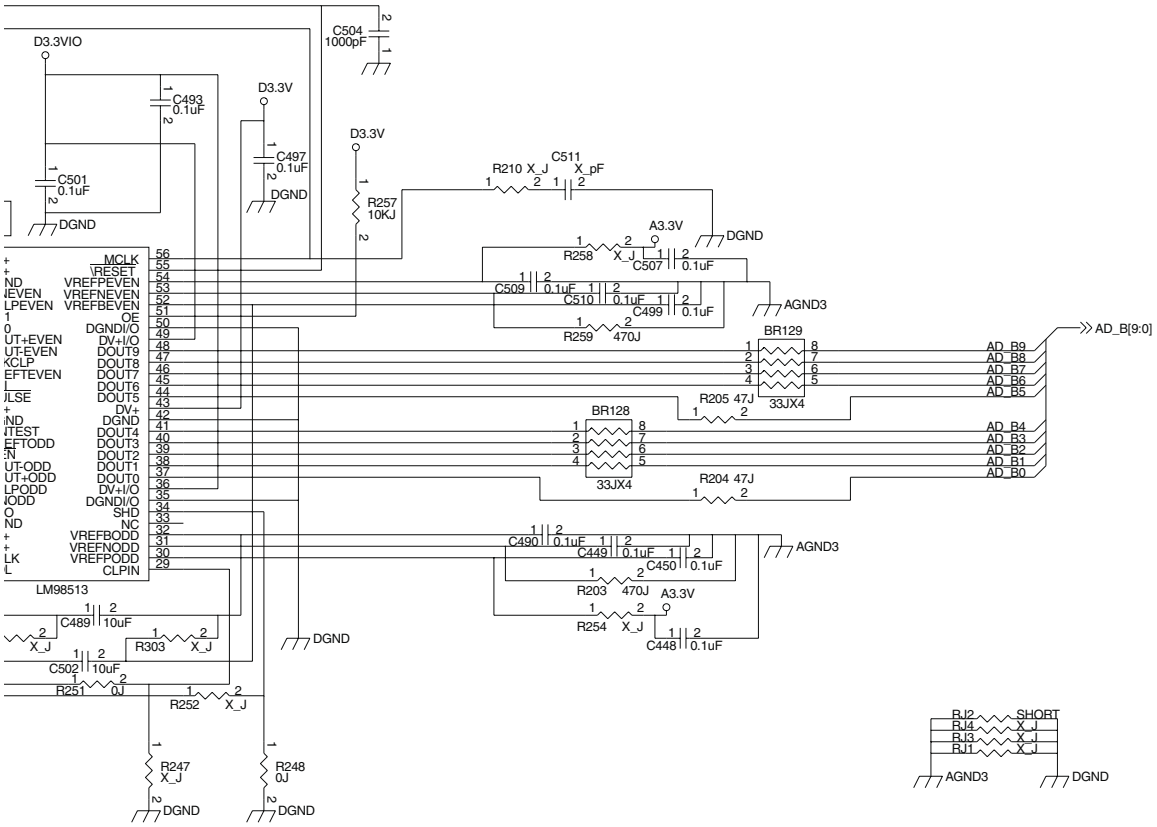
D3.3VIO
C493 0.1uF
C501 0.1uF
DGND
D3.3V
C497 0.1uF
DGND
C504 1000pF
D3.3V
R257 10KJ
C511
R210 X_J
X_pF
A3.3V
DGND
R258 X_J
C507 0.1uF
C509 0.1uF
C510 0.1uF
C499 0.1uF
AGND3
R259 470J
BR129
AD_B9
AD_B8
AD_B7
AD_B6
AD_B5
AD_B[9:0]
R205 47J
33JX4
BR128
AD_B4
AD_B3
AD_B2
AD_B1
AD_B0
33JX4
R204 47J
MCLK
\RESET
VREFPEVEN
VREFNEVEN
VREFBEVEN
OE
DGNDI/O
DV+I/O
DOUT9
DOUT8
DOUT7
DOUT6
DOUT5
DV+
DGND
DOUT4
DOUT3
DOUT2
DOUT1
DOUT0
DV+I/O
DGNDI/O
SHD
NC
VREFBODD
VREFNODD
VREFPODD
CLPIN
LM98513
C490 0.1uF
C449 0.1uF
C450 0.1uF
AGND3
R203 470J
A3.3V
R254 X_J
C448 0.1uF
C489 10uF
R303 X_J
C502 10uF
R251 0J
R252 X_J
DGND
R247 X_J
R248 0J
DGND
DGND
RJ2 SHORT
RJ4 X_J
RJ3 X_J
RJ1 X_J
AGND3
DGND

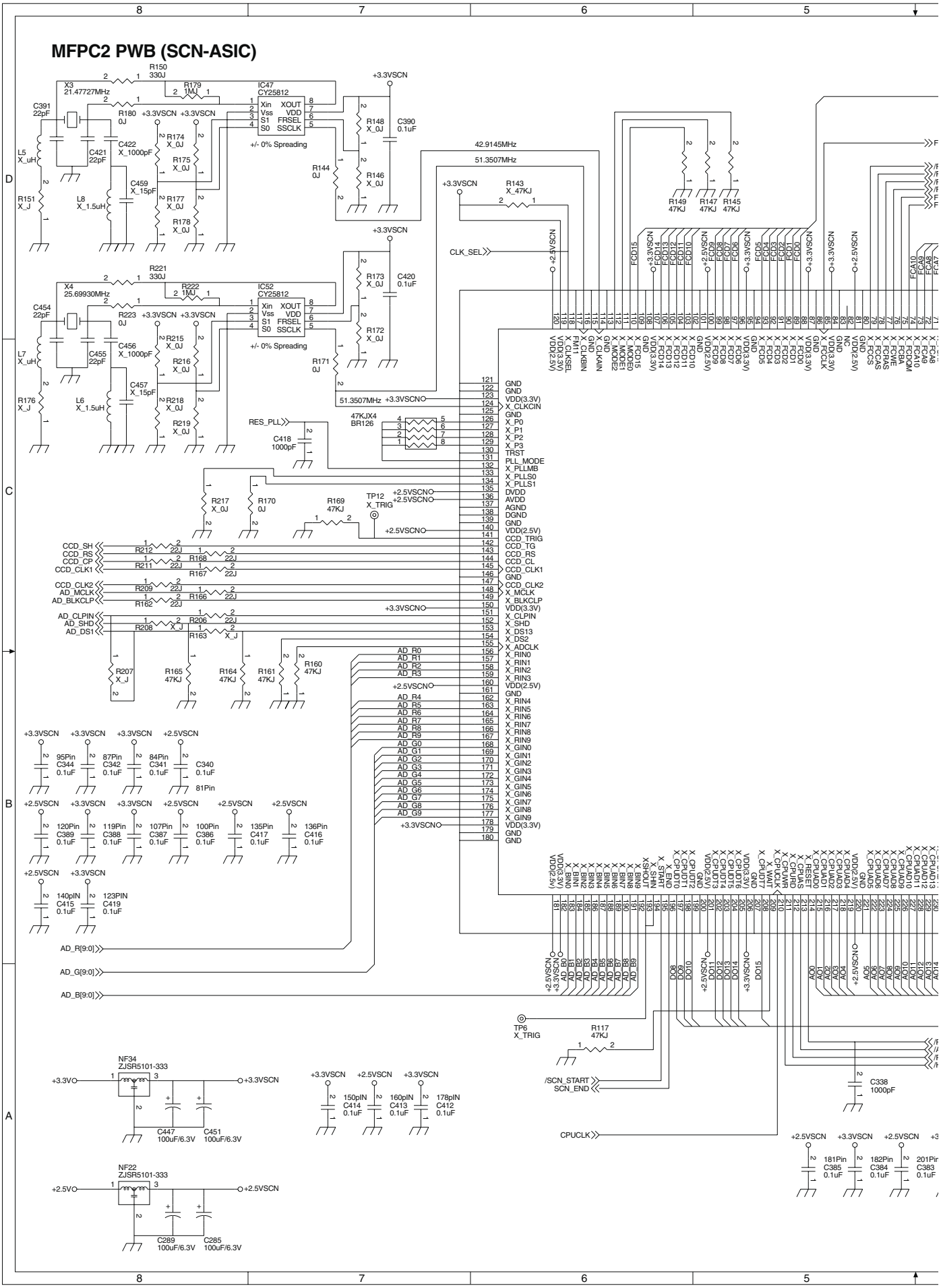
MFPC2 PWB (SCN-ASIC)
8
7
6
5
D
C
B
A
X3
21.47727MHz
X4
25.69930MHz
IC47
CY25812
IC52
CY25812
+/- 0% Spreading
42.9145MHz
51.3507MHz
47KJX4
BR126
TP12
X_TRIG
TP6
X_TRIG
CLK_SEL
RES_PLL
/SCN_START
SCN_END
CPUCLK
AD_R[9:0]
AD_G[9:0]
AD_B[9:0]
NF34
ZJSR5101-333
NF22
ZJSR5101-333
+3.3VSCN
+2.5VSCN
+3.3V
+2.5V
C447
100uF/6.3V
C451
100uF/6.3V
C289
100uF/6.3V
C285
100uF/6.3V
C338
1000pF

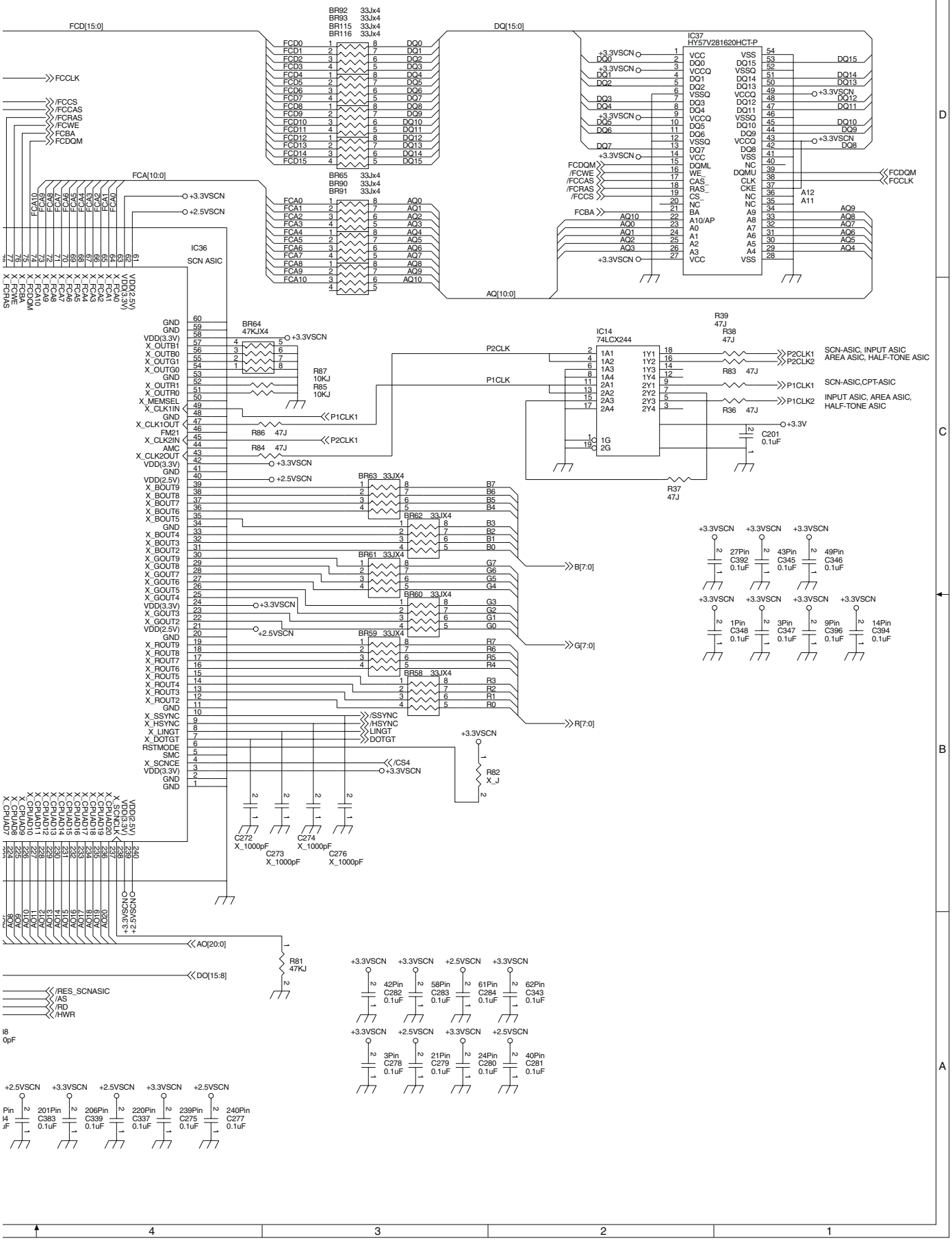
FCD[15:0]
DQ[15:0]
FCCLK
/FCCS
/FCCAS
/FCRAS
/FCWE
FCBA
FCDQM
FCA[10:0]
AQ[10:0]
IC36
SCN ASIC
IC37
HY57V281620HCT-P
IC14
74LCX244
BR92 33Jx4
BR93 33Jx4
BR115 33Jx4
BR116 33Jx4
BR65 33Jx4
BR90 33Jx4
BR91 33Jx4
BR64 47KJX4
BR63 33JX4
BR62 33JX4
BR61 33JX4
BR60 33JX4
BR59 33JX4
BR58 33JX4
R87 10KJ
R85 10KJ
R86 47J
R84 47J
R39 47J
R38 47J
R83 47J
R36 47J
R37 47J
R82 X_J
R81 47KJ
P1CLK1
P2CLK1
P2CLK
P1CLK
+3.3VSCN
+2.5VSCN
+3.3V
B[7:0]
G[7:0]
R[7:0]
/SSYNC
/HSYNC
LINGT
DOTGT
/CS4
AO[20:0]
DO[15:8]
/RES_SCNASIC
/AS
/RD
/HWR
P2CLK1
P1CLK1
SCN-ASIC, INPUT ASIC AREA ASIC, HALF-TONE ASIC
SCN-ASIC,CPT-ASIC
INPUT ASIC, AREA ASIC, HALF-TONE ASIC
C201 0.1uF
C272 X_1000pF
C273 X_1000pF
C274 X_1000pF
C276 X_1000pF
27Pin C392 0.1uF
43Pin C345 0.1uF
49Pin C346 0.1uF
1Pin C348 0.1uF
3Pin C347 0.1uF
9Pin C396 0.1uF
14Pin C394 0.1uF
42Pin C282 0.1uF
58Pin C283 0.1uF
61Pin C284 0.1uF
62Pin C343 0.1uF
3Pin C278 0.1uF
21Pin C279 0.1uF
24Pin C280 0.1uF
40Pin C281 0.1uF
201Pin C383 0.1uF
206Pin C339 0.1uF
220Pin C337 0.1uF
239Pin C275 0.1uF
240Pin C277 0.1uF

MFPC2 PWB (INPUT PROCESS ASIC, IPD-ASIC)

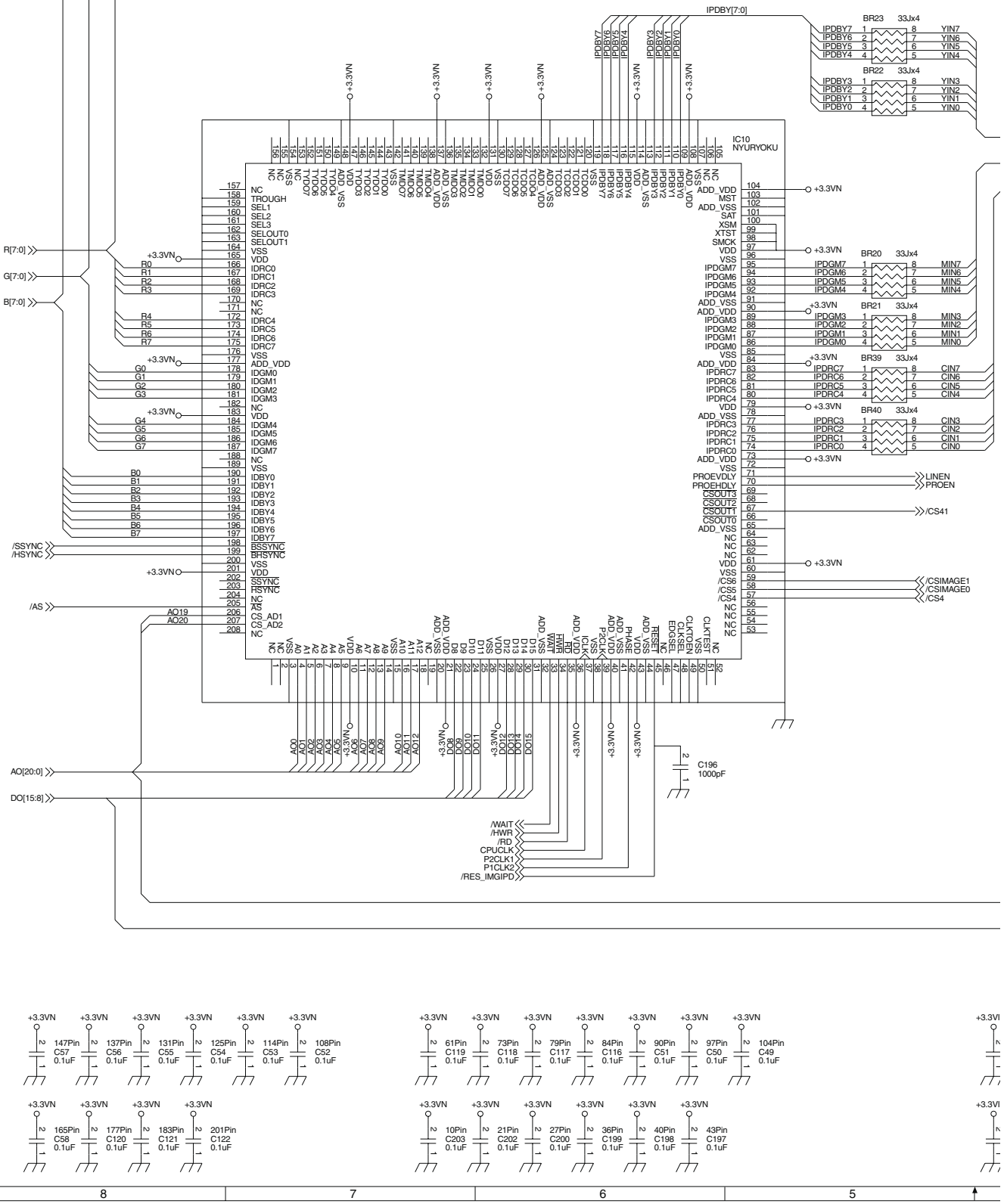

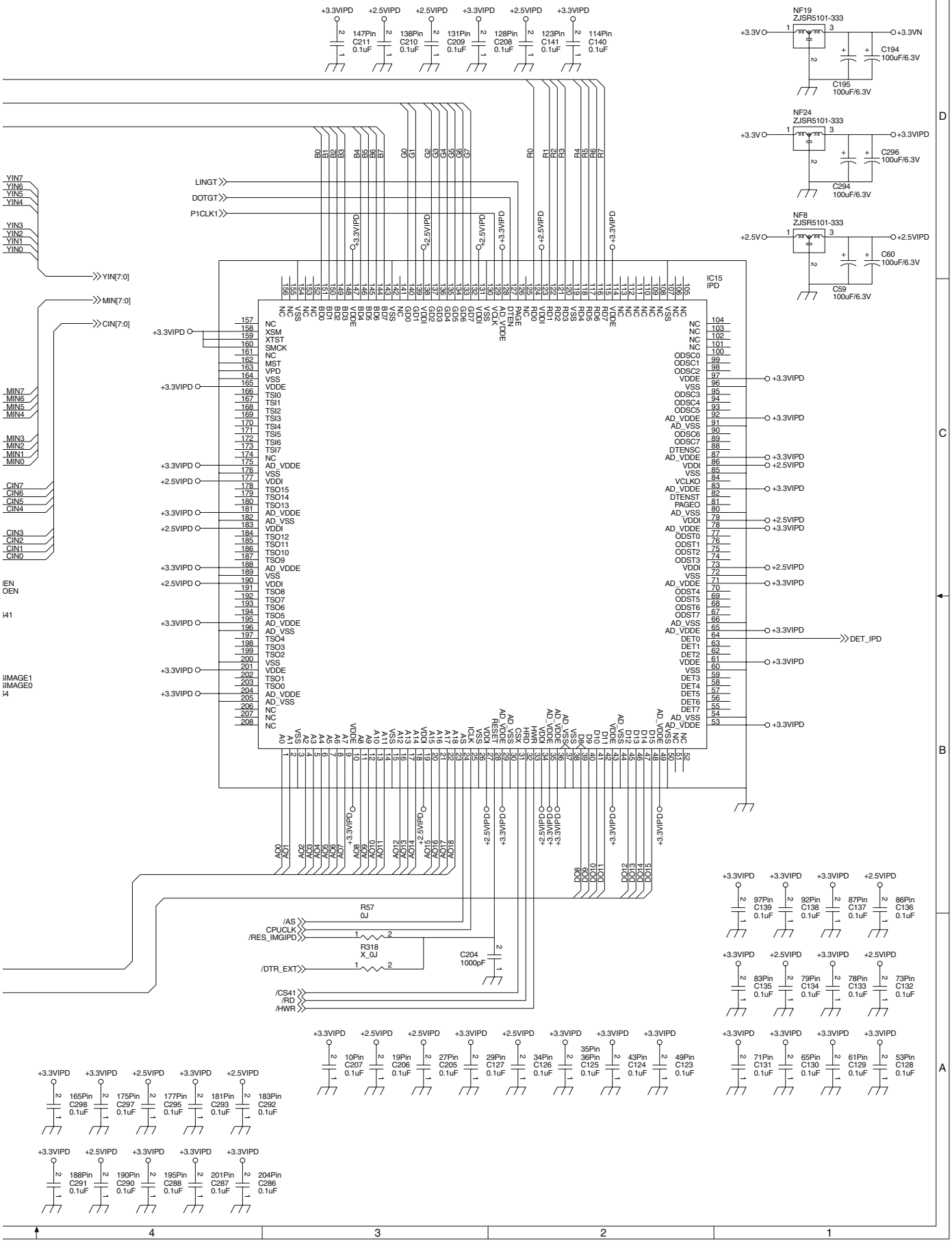
IC15
IPD
NF19
ZJSR5101-333
NF24
ZJSR5101-333
NF8
ZJSR5101-333
LINGT
DOTGT
P1CLK1
YIN[7:0]
MIN[7:0]
CIN[7:0]
DET_IPD
R57
0J
R318
X_0J
C204
1000pF
/AS
CPUCLK
/RES_IMGIPD
/DTR_EXT
/CS41
/RD
/HWR

MFPC2 PWB (AREA SEPARATION ASIC)

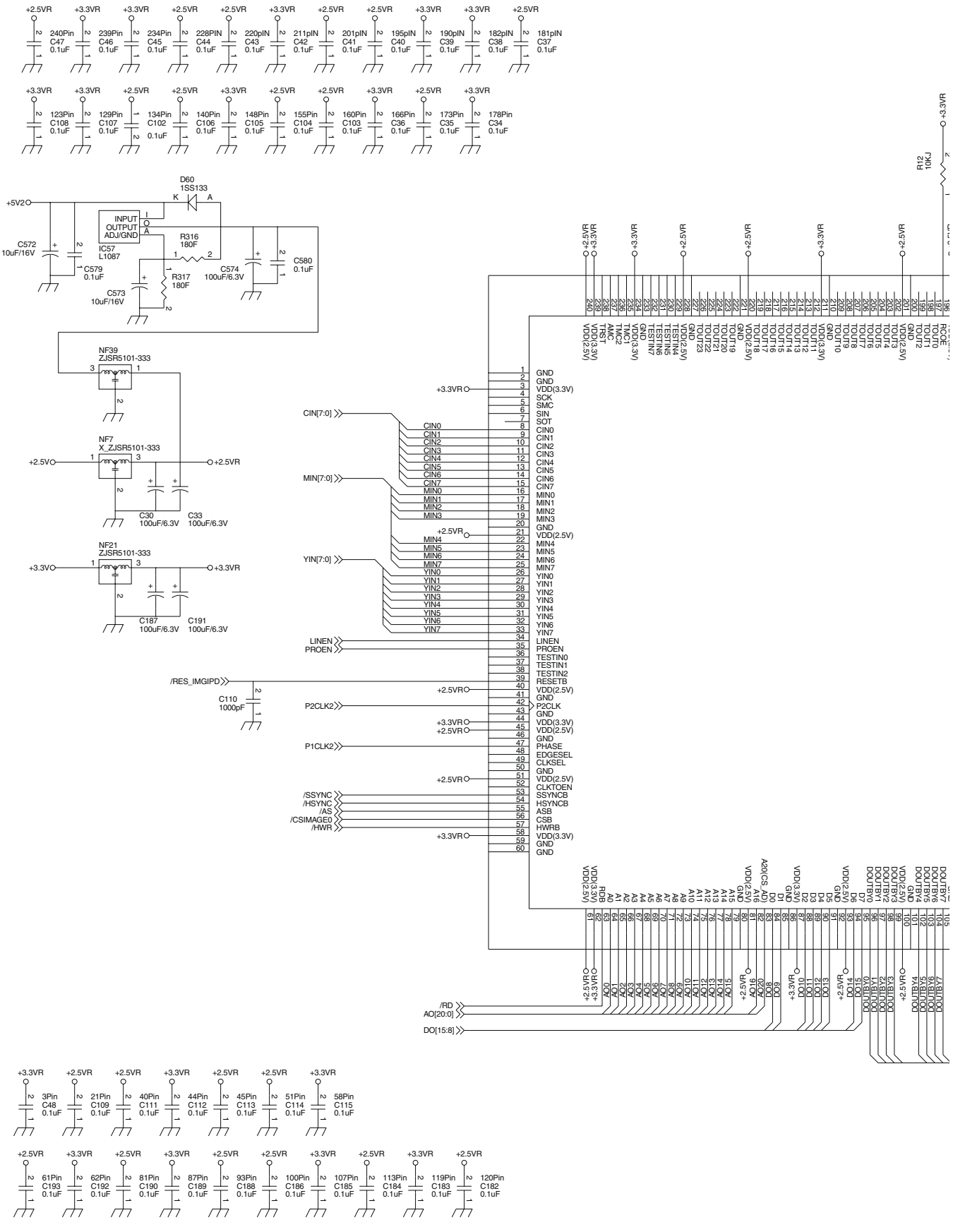

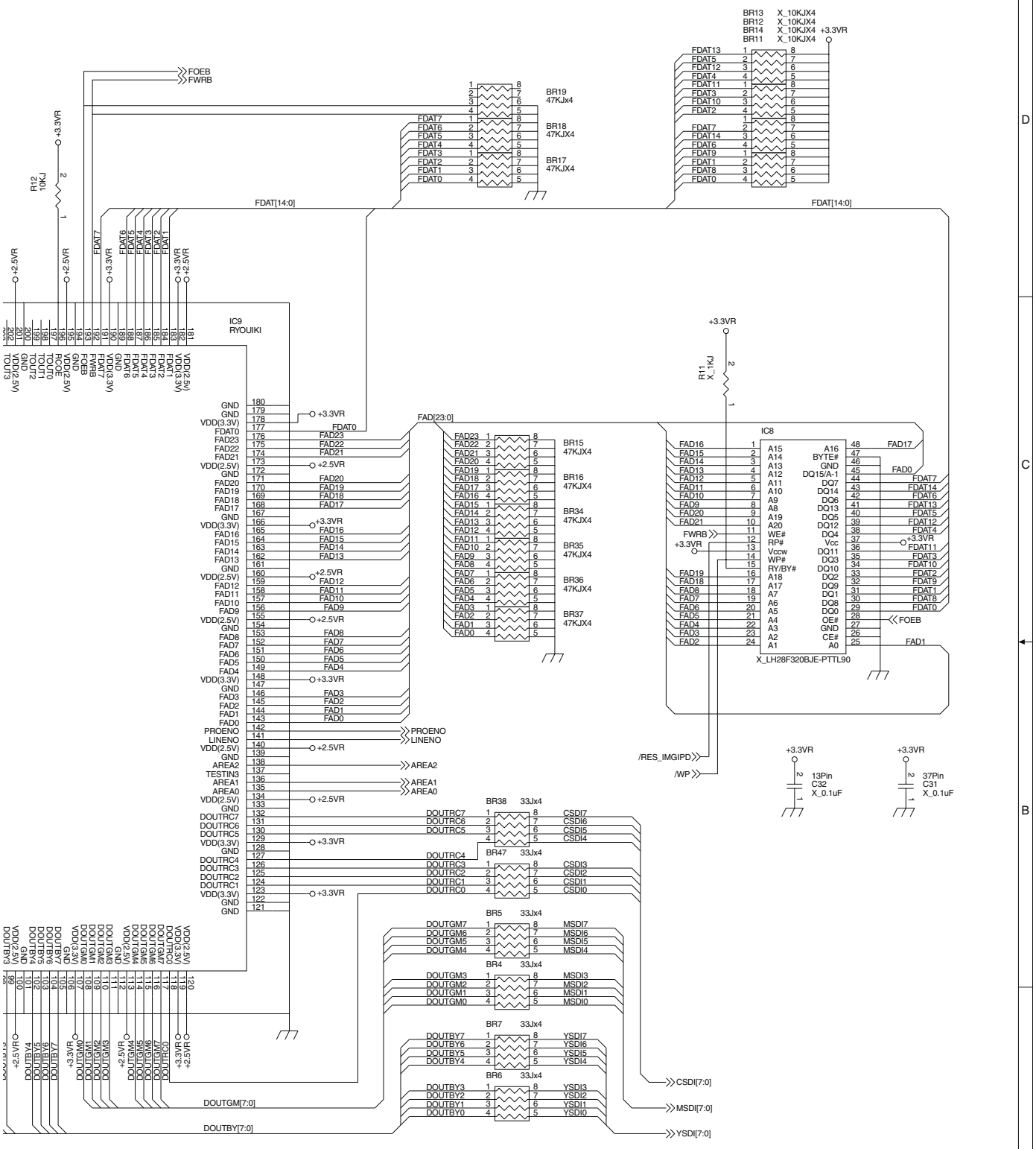
IC9
RYOUIKI
IC8
X_LH28F320BJE-PTTL90
FDAT[14:0]
FAD[23:0]
BR19 47KJx4
BR18 47KJX4
BR17 47KJX4
BR15 47KJX4
BR16 47KJX4
BR34 47KJX4
BR35 47KJX4
BR36 47KJX4
BR37 47KJX4
BR38 33Jx4
BR47 33Jx4
BR5 33Jx4
BR4 33Jx4
BR7 33Jx4
BR6 33Jx4
BR13 X_10KJX4
BR12 X_10KJX4
BR14 X_10KJX4
BR11 X_10KJX4
R12 10KJ
R11 X_1KJ
13Pin C32 X_0.1uF
37Pin C31 X_0.1uF
FOEB
FWRB
/RES_IMGIPD
/WP
PROENO
LINENO
AREA2
AREA1
AREA0
DOUTGM[7:0]
DOUTBY[7:0]
CSDI[7:0]
MSDI[7:0]
YSDI[7:0]

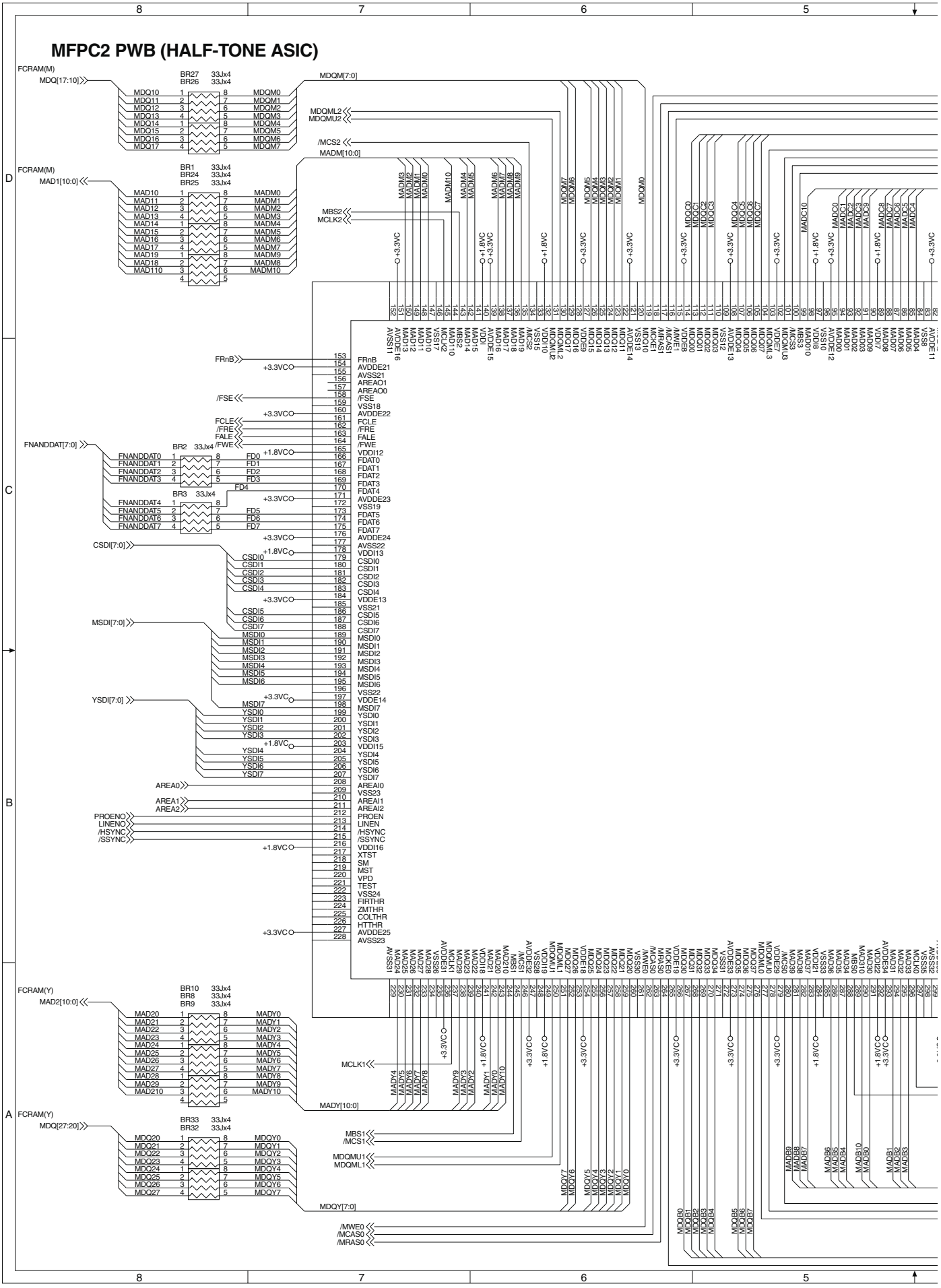
MFPC2 PWB (HALF-TONE ASIC)
FCRAM(M)
MDQ[17:10]
MDQ[7:0]
MDQML2
MDQMU2
/MCS2
MADM[10:0]
MBS2
MCLK2
FCRAM(M)
MAD1[10:0]
FRnB
/FSE
FCLE
/FRE
FALE
/FWE
FNANDDAT[7:0]
CSDI[7:0]
MSDI[7:0]
YSDI[7:0]
AREA0
AREA1
AREA2
PROENO
LINENO
/HSYNC
/SSYNC
FCRAM(Y)
MAD2[10:0]
MCLK1
MADY[10:0]
FCRAM(Y)
MDQ[27:20]
MBS1
/MCS1
MDQMU1
MDQML1
MDQY[7:0]
/MWE0
/MCAS0
/MRAS0
+3.3VC
+1.8VC
BR27 33Jx4
BR26 33Jx4
BR1 33Jx4
BR24 33Jx4
BR25 33Jx4
BR2 33Jx4
BR3 33Jx4
BR10 33Jx4
BR8 33Jx4
BR9 33Jx4
BR33 33Jx4
BR32 33Jx4

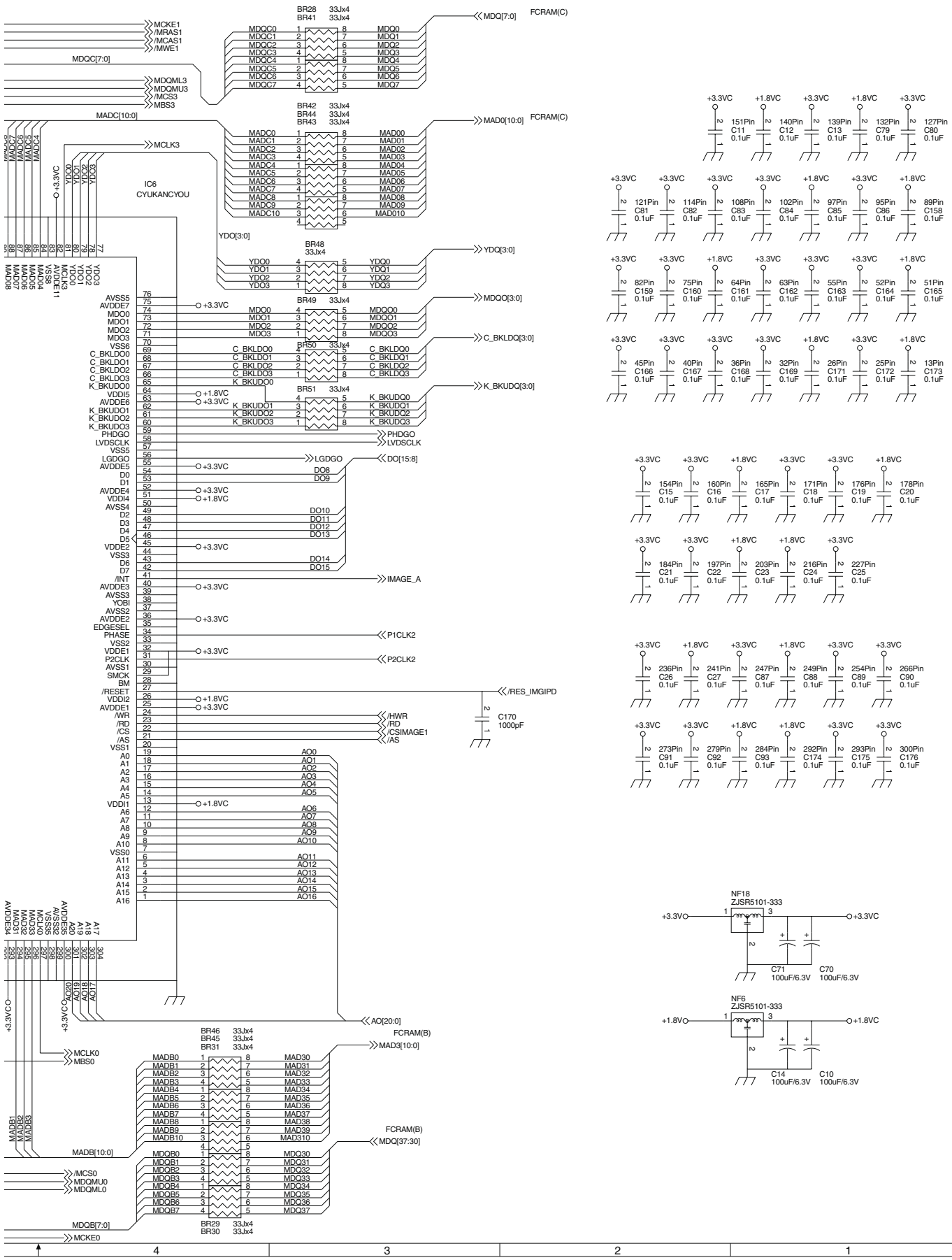
IC6
CYUKANCYOU
FCRAM(C)
FCRAM(B)
MDQ[7:0]
MAD0[10:0]
MAD3[10:0]
MDQ[37:30]
YDQ[3:0]
MDQO[3:0]
C_BKLDQ[3:0]
K_BKUDQ[3:0]
DO[15:8]
AO[20:0]
IMAGE_A
P1CLK2
P2CLK2
/RES_IMGIPD
C170 1000pF
NF18 ZJSR5101-333
C71 100uF/6.3V
C70 100uF/6.3V
NF6 ZJSR5101-333
C14 100uF/6.3V
C10 100uF/6.3V

MFPC2 PWB (LVDS & FCRAM & NAND & CONNECTOR)

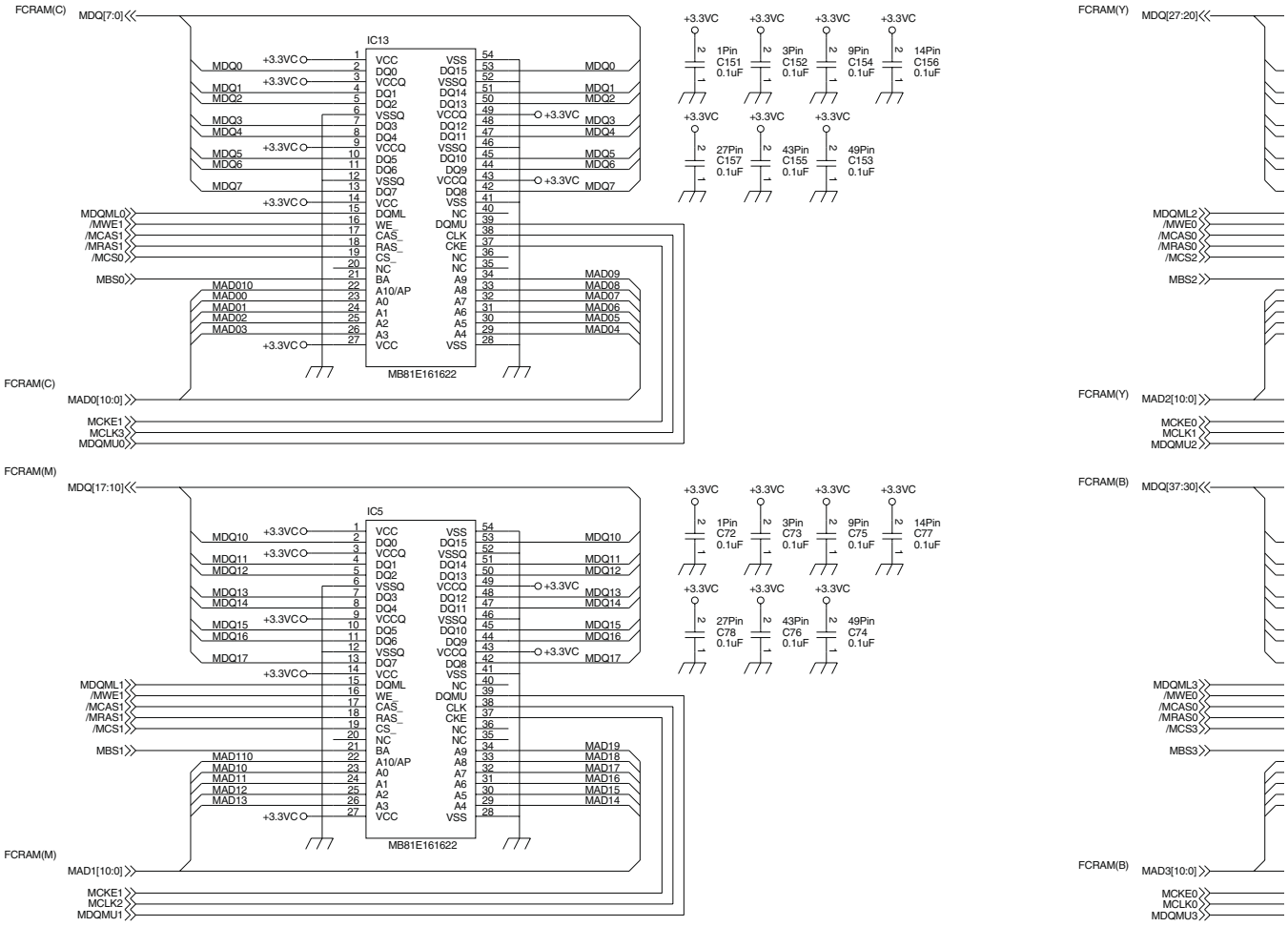

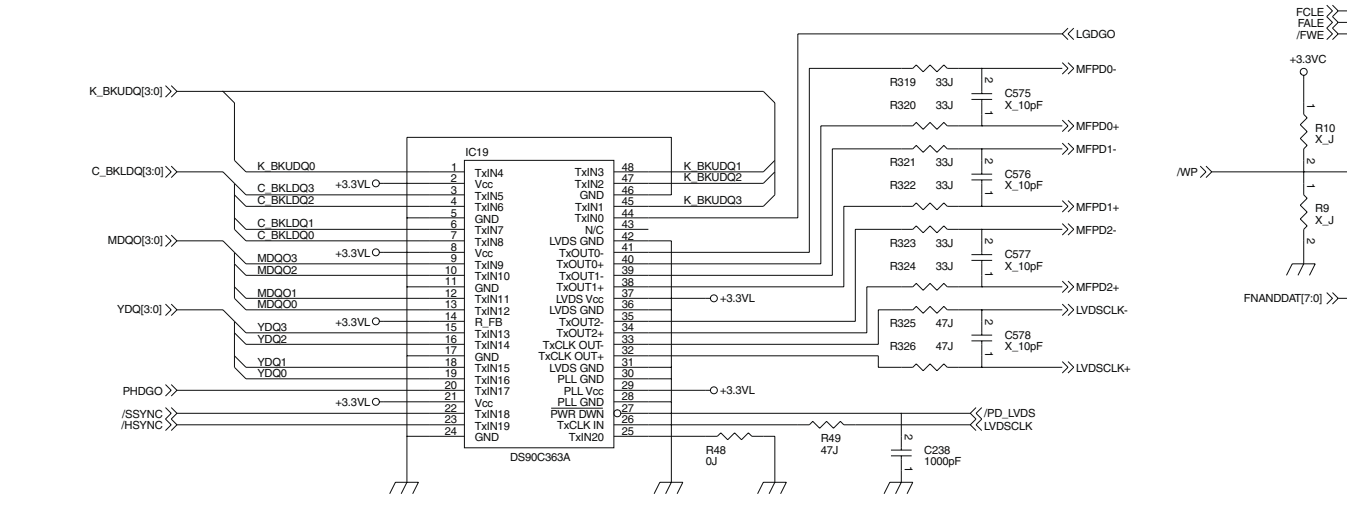

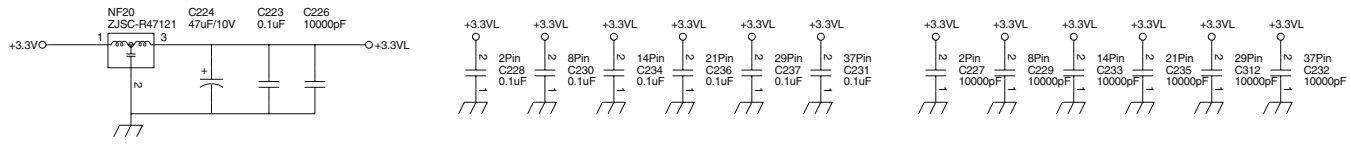

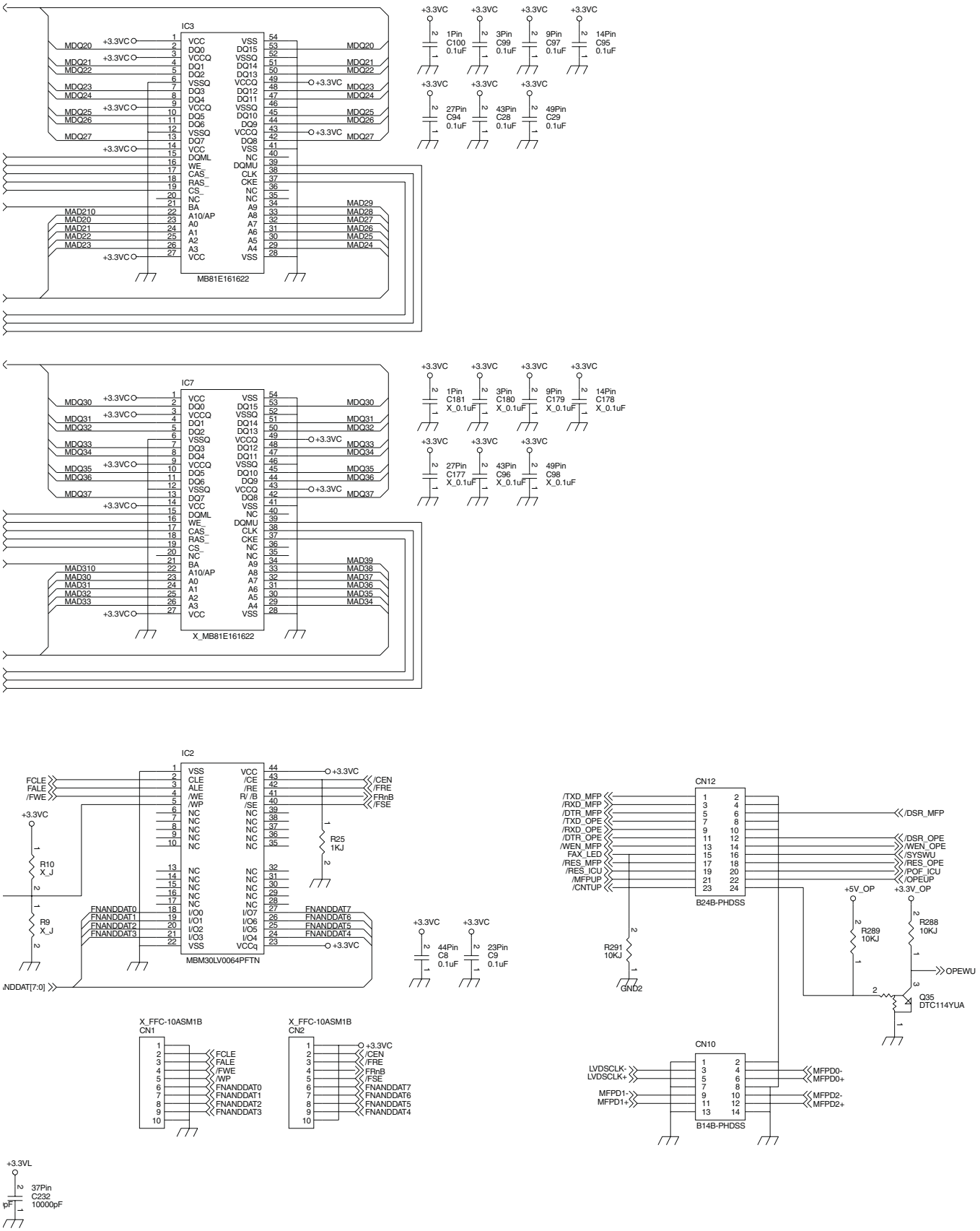
IC3
MB81E161622
IC7
X_MB81E161622
IC2
MBM30LV0064PFTN
CN12
B24B-PHDSS
CN10
B14B-PHDSS
CN1
CN2
X_FFC-10ASM1B
Q35
DTC114YUA
+3.3VC
+3.3VL
+5V_OP
+3.3V_OP
GND2

MFPC2 PWB (OPE CONTROL CPU)

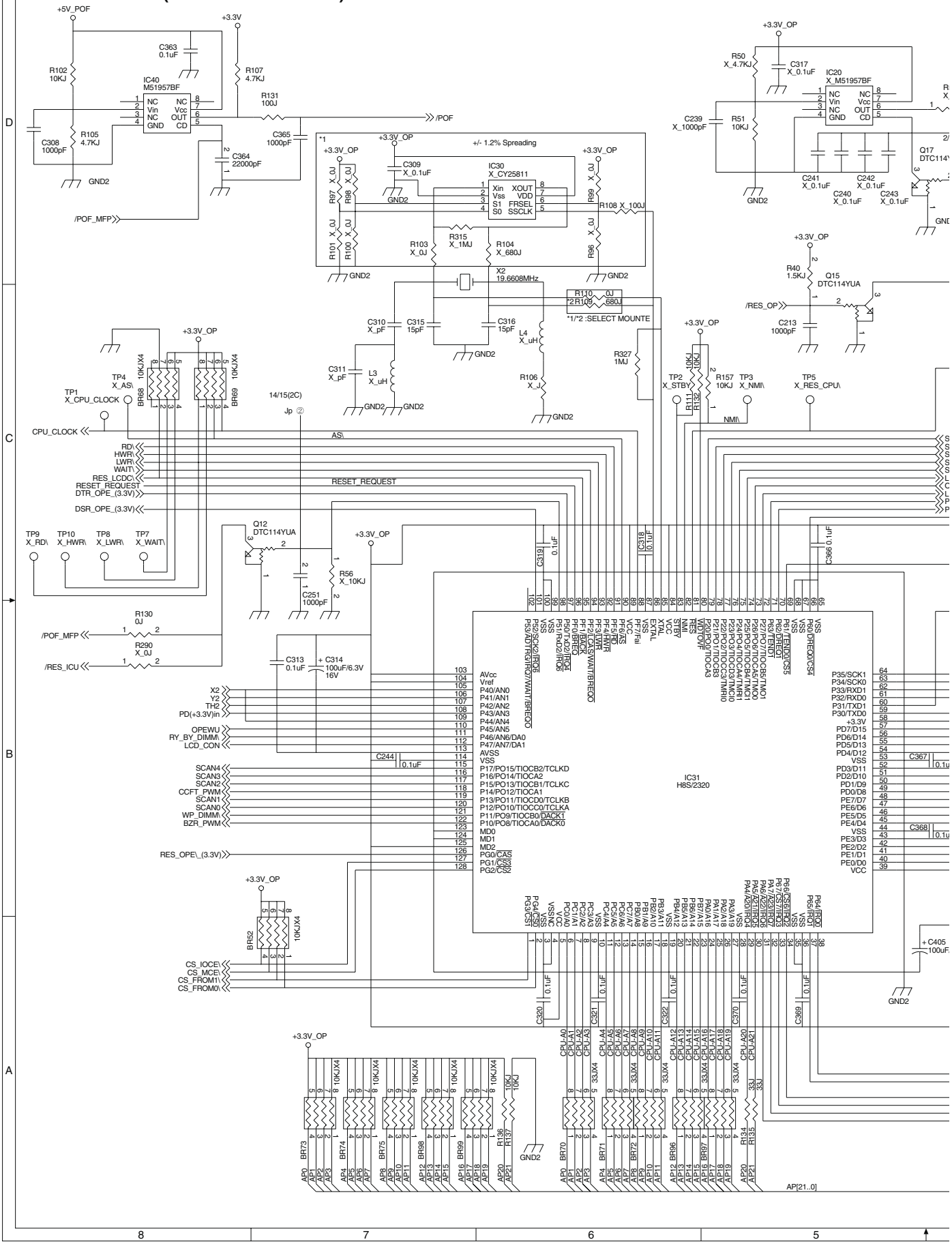

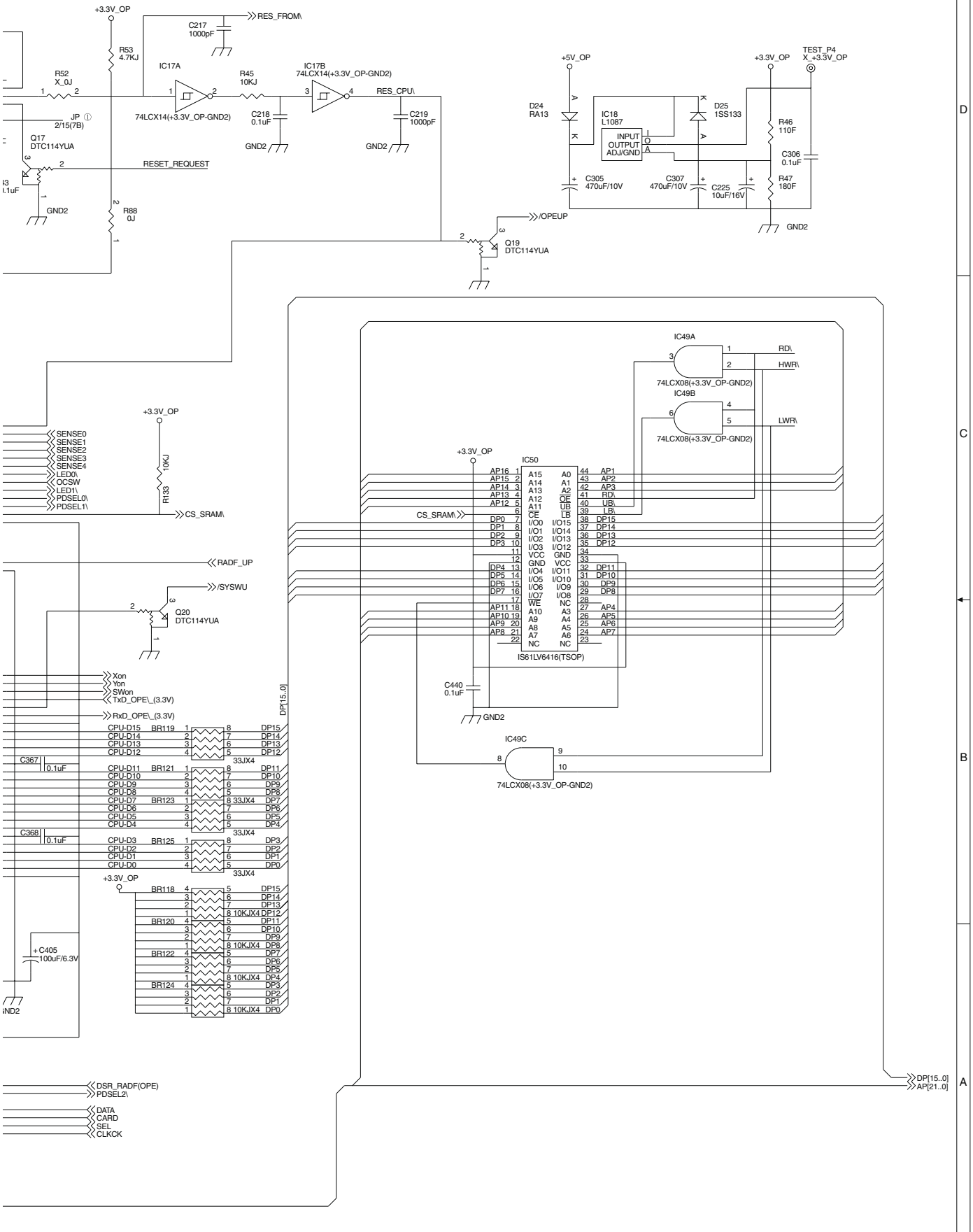
+3.3V_OP
RES_FROM\
C217
1000pF
R53
4.7KJ
R52
X_0J
IC17A
74LCX14(+3.3V_OP-GND2)
R45
10KJ
IC17B
74LCX14(+3.3V_OP-GND2)
RES_CPU\
C218
0.1uF
C219
1000pF
GND2
JP ①
2/15(7B)
Q17
DTC114YUA
RESET_REQUEST
R88
0J
+5V_OP
D24
RA13
IC18
L1087
INPUT
OUTPUT
ADJ/GND
D25
1SS133
TEST_P4
X_+3.3V_OP
R46
110F
C306
0.1uF
C305
470uF/10V
C307
470uF/10V
C225
10uF/16V
R47
180F
/OPEUP
Q19
DTC114YUA
IC49A
74LCX08(+3.3V_OP-GND2)
RD\
HWR\
IC49B
74LCX08(+3.3V_OP-GND2)
LWR\
SENSE0
SENSE1
SENSE2
SENSE3
SENSE4
LED0\
OCSW
LED1\
PDSEL0\
PDSEL1\
R133
10KJ
CS_SRAM\
IC50
IS61LV6416(TSOP)
C440
0.1uF
IC49C
74LCX08(+3.3V_OP-GND2)
RADF_UP
/SYSWU
Q20
DTC114YUA
Xon
Yon
SWon
TxD_OPE_(3.3V)
RxD_OPE_(3.3V)
DP[15..0]
C367
0.1uF
C368
0.1uF
33JX4
10KJX4
C405
100uF/6.3V
DSR_RADF(OPE)
PDSEL2\
DATA
CARD
SEL
CLKCK
DP[15..0]
AP[21..0]

MFPC2 PWB (FLASH & LCDC)

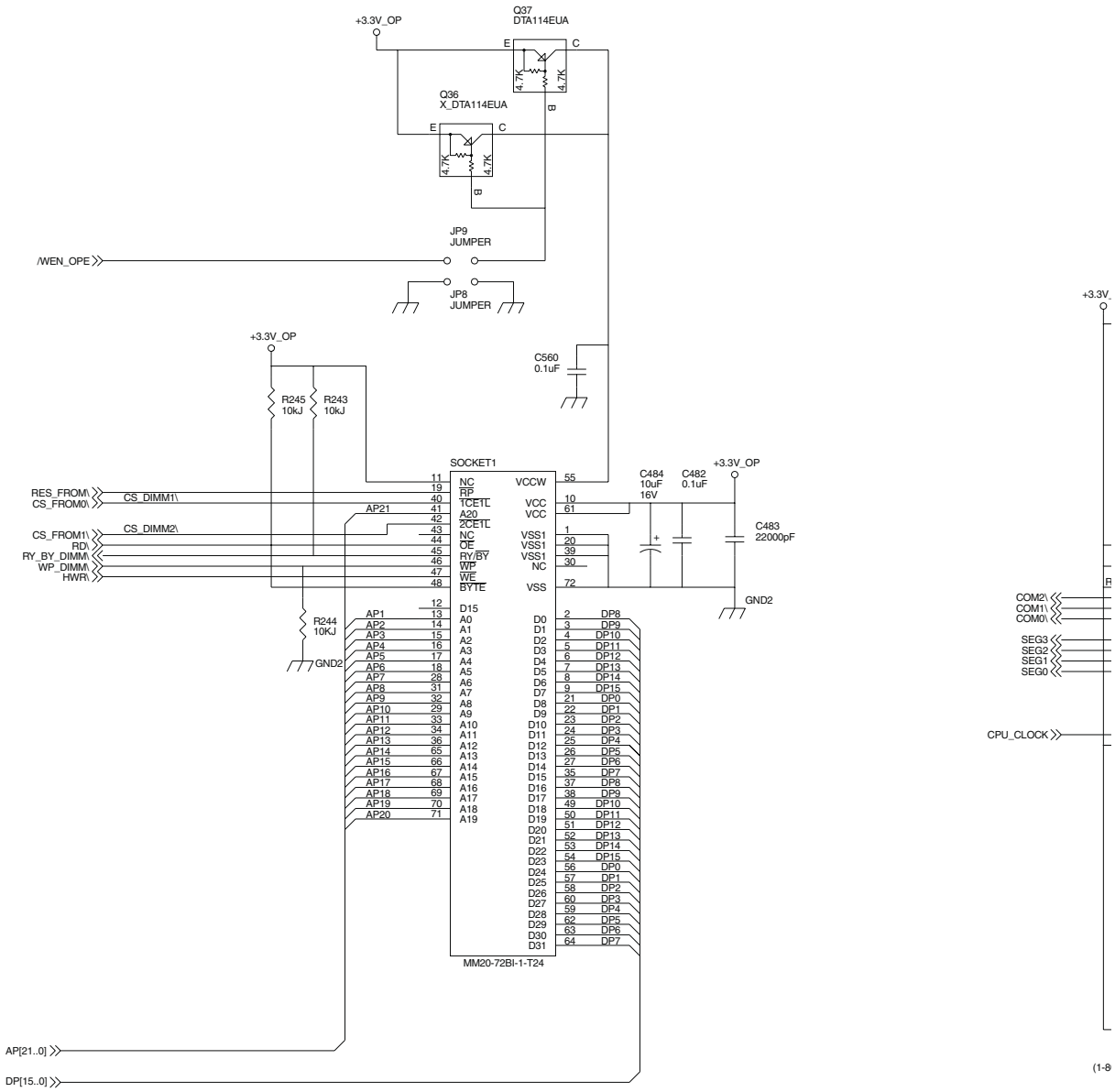

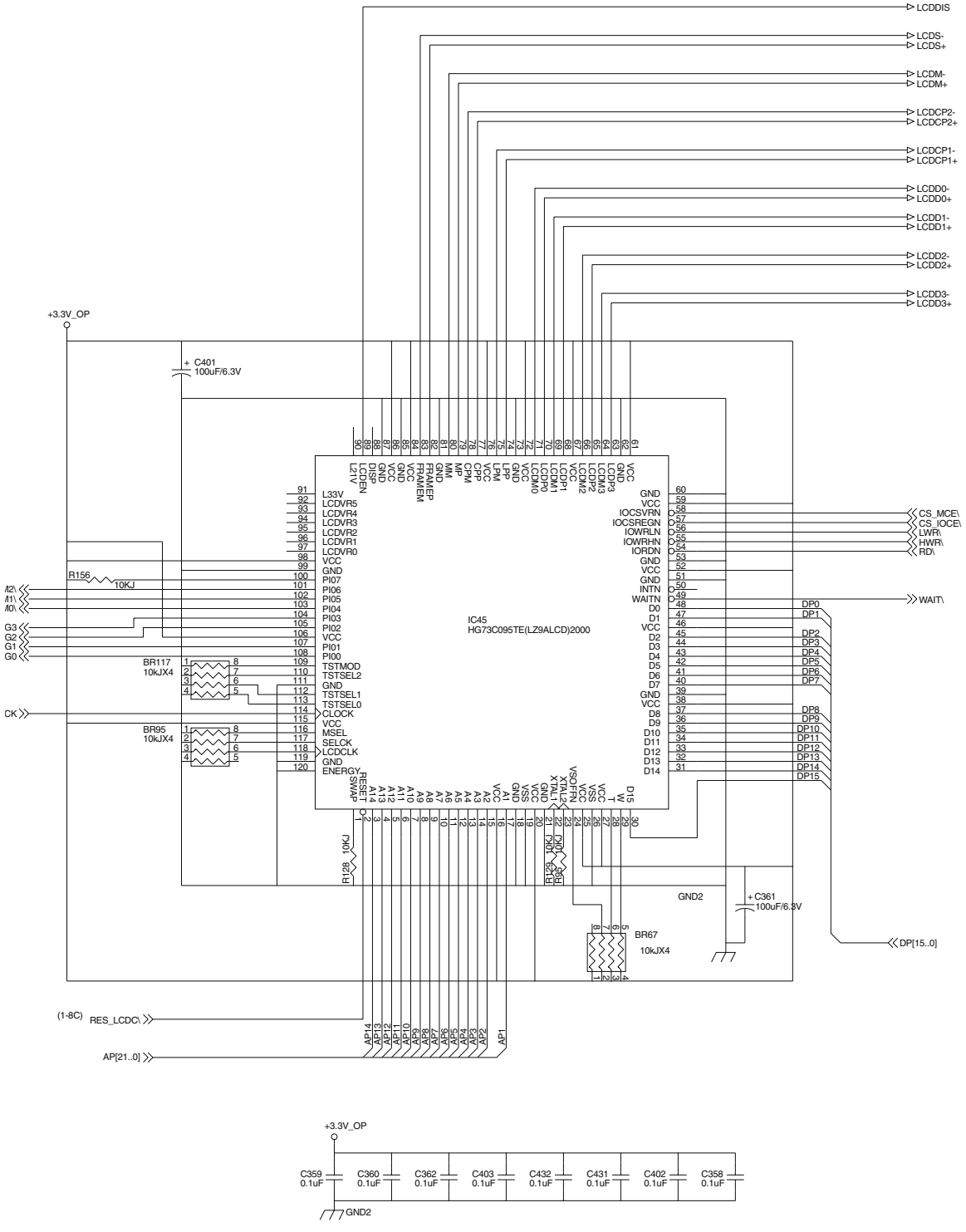
LCDDIS
LCDS-
LCDS+
LCDM-
LCDM+
LCDCP2-
LCDCP2+
LCDCP1-
LCDCP1+
LCDD0-
LCDD0+
LCDD1-
LCDD1+
LCDD2-
LCDD2+
LCDD3-
LCDD3+
+3.3V_OP
+ C401
100uF/6.3V
IC45
HG73C095TE(LZ9ALCD)2000
L33V
LCDVR5
LCDVR4
LCDVR3
LCDVR2
LCDVR1
LCDVR0
PI07
PI06
PI05
PI04
PI03
PI02
PI01
PI00
TSTMOD
TSTSEL2
TSTSEL1
TSTSEL0
CLOCK
MSEL
SELCK
LCDCLK
ENERGY
RESET
SWAP
CS_MCE\
CS_IOCE\
LWR\
HWR\
RD\
WAIT\
DP0
DP1
DP2
DP3
DP4
DP5
DP6
DP7
DP8
DP9
DP10
DP11
DP12
DP13
DP14
DP15
DP[15..0]
R156
10KJ
BR117
10kJX4
BR95
10kJX4
CK
R128
10KJ
R129
10KJ
R130
10KJ
BR67
10kJX4
GND2
+ C361
100uF/6.3V
(1-8C) RES_LCDC\
AP[21..0]
+3.3V_OP
C359 0.1uF
C360 0.1uF
C362 0.1uF
C403 0.1uF
C432 0.1uF
C431 0.1uF
C402 0.1uF
C358 0.1uF
GND2

MFPC2 PWB (A/D & UART & OUTPUT)

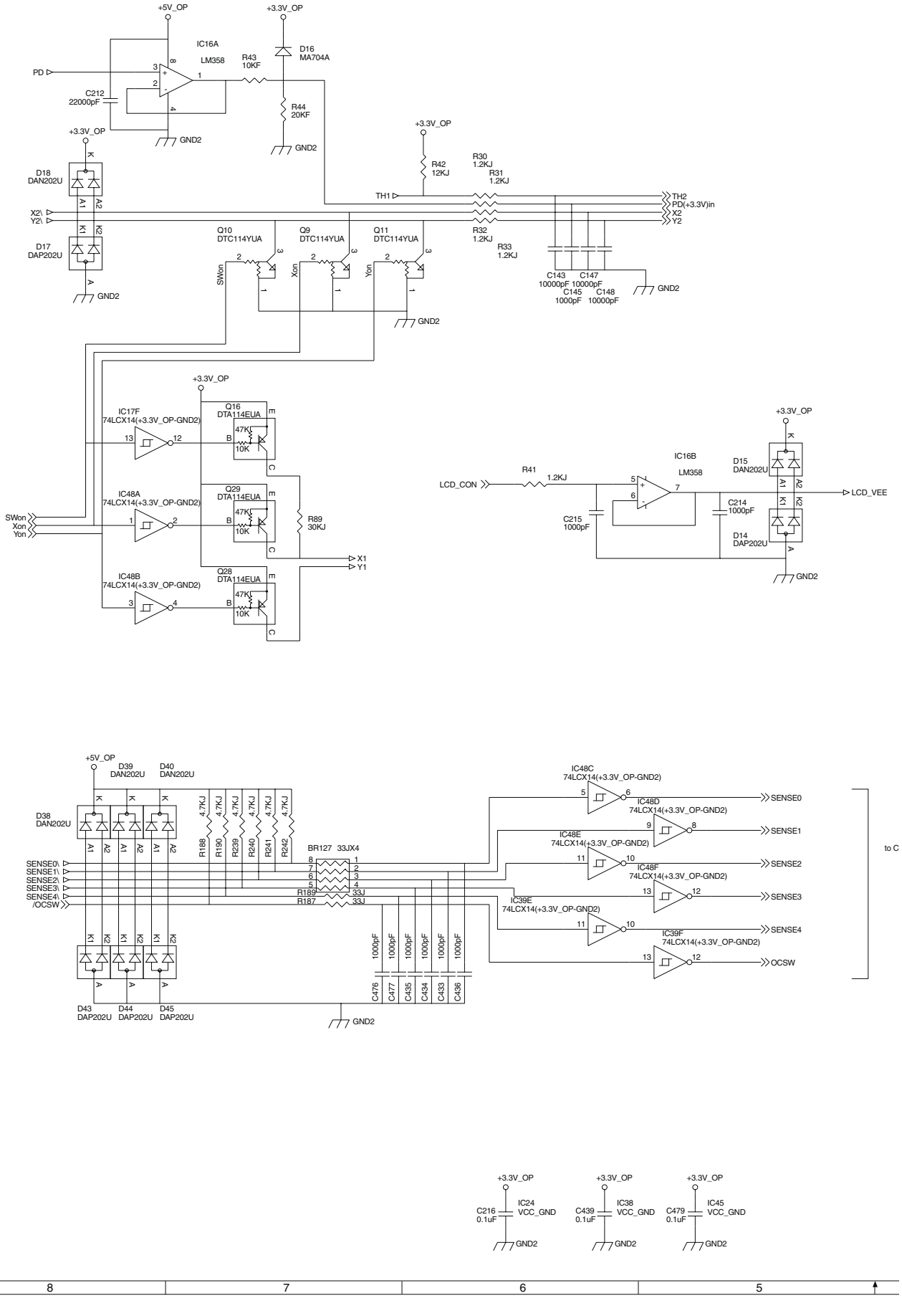

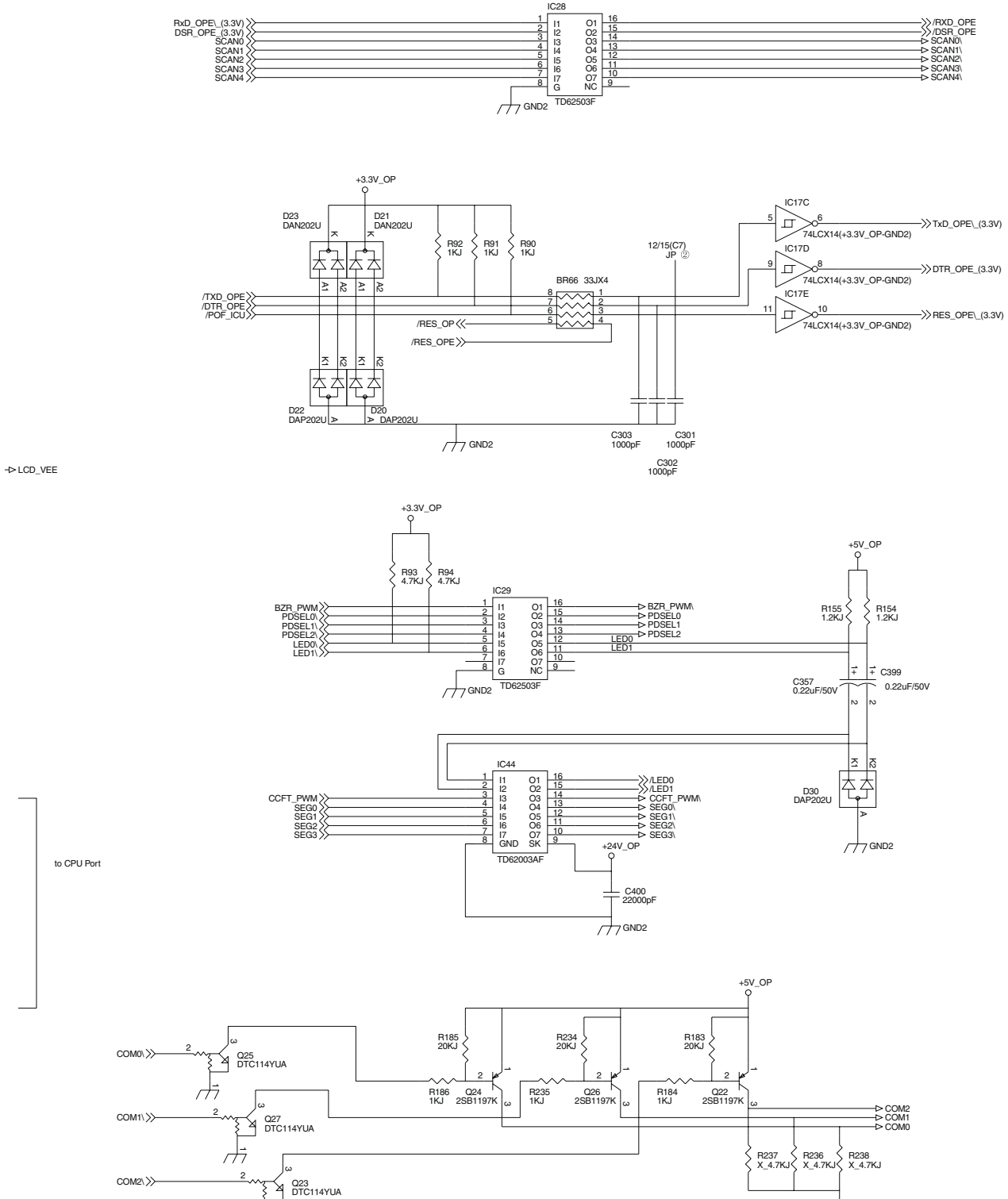
IC28
TD62503F
GND2
+3.3V_OP
D23 DAN202U
D21 DAN202U
R92 1KJ
R91 1KJ
R90 1KJ
12/15(C7) JP ②
BR66 33JX4
IC17C
IC17D
IC17E
74LCX14(+3.3V_OP-GND2)
D22 DAP202U
D20 DAP202U
C303 1000pF
C301 1000pF
C302 1000pF
LCD_VEE
IC29
TD62503F
R93 4.7KJ
R94 4.7KJ
+5V_OP
R155 1.2KJ
R154 1.2KJ
C357 0.22uF/50V
C399 0.22uF/50V
IC44
TD62003AF
D30 DAP202U
+24V_OP
C400 22000pF
to CPU Port
Q25 DTC114YUA
Q27 DTC114YUA
Q23 DTC114YUA
R185 20KJ
R234 20KJ
R183 20KJ
R186 1KJ
R235 1KJ
R184 1KJ
Q24 2SB1197K
Q26 2SB1197K
Q22 2SB1197K
R237 X_4.7KJ
R236 X_4.7KJ
R238 X_4.7KJ

MFPC2 PWB (OPE CONTROL CONNECTOR)

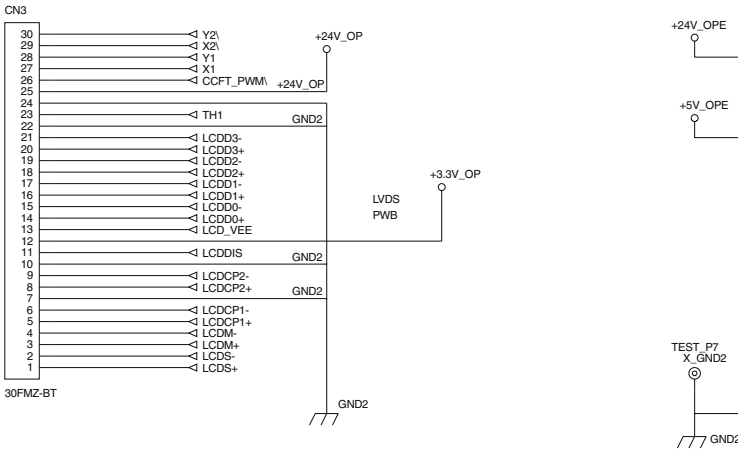

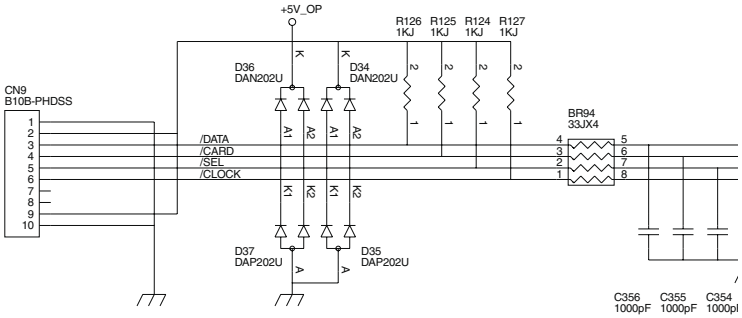

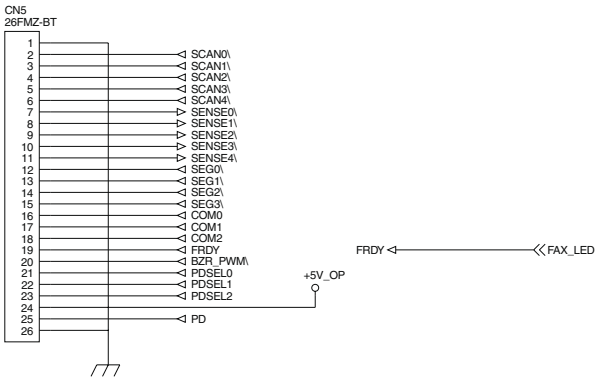

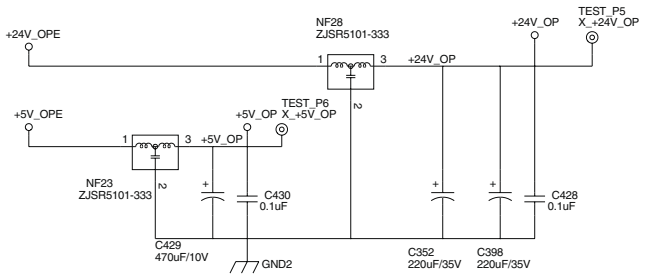
+24V_OPE
NF28
ZJSR5101-333
+24V_OP
TEST_P5
X_+24V_OP
+24V_OP
+5V_OPE
+5V_OP
TEST_P6
X_+5V_OP
+5V_OP
NF23
ZJSR5101-333
C430
0.1uF
C428
0.1uF
C429
470uF/10V
GND2
C352
220uF/35V
C398
220uF/35V

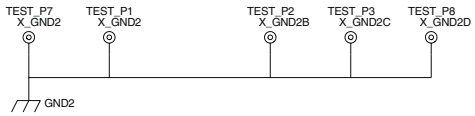
TEST_P7
X_GND2
TEST_P1
X_GND2
TEST_P2
X_GND2B
TEST_P3
X_GND2C
TEST_P8
X_GND2D
GND2

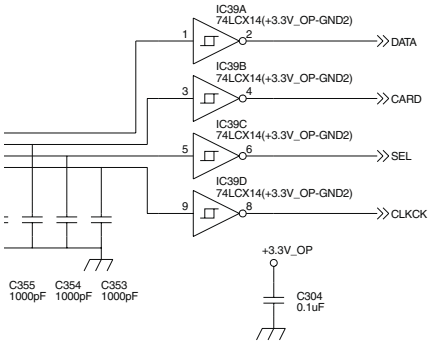
IC39A
74LCX14(+3.3V_OP-GND2)
DATA
IC39B
74LCX14(+3.3V_OP-GND2)
CARD
IC39C
74LCX14(+3.3V_OP-GND2)
SEL
IC39D
74LCX14(+3.3V_OP-GND2)
CLKCK
C355
1000pF
C354
1000pF
C353
1000pF
+3.3V_OP
C304
0.1uF

MFPC2 PWB

PARTS LAYOUT / 部品配置図

[PARTS SURFACE / 部品面**]**

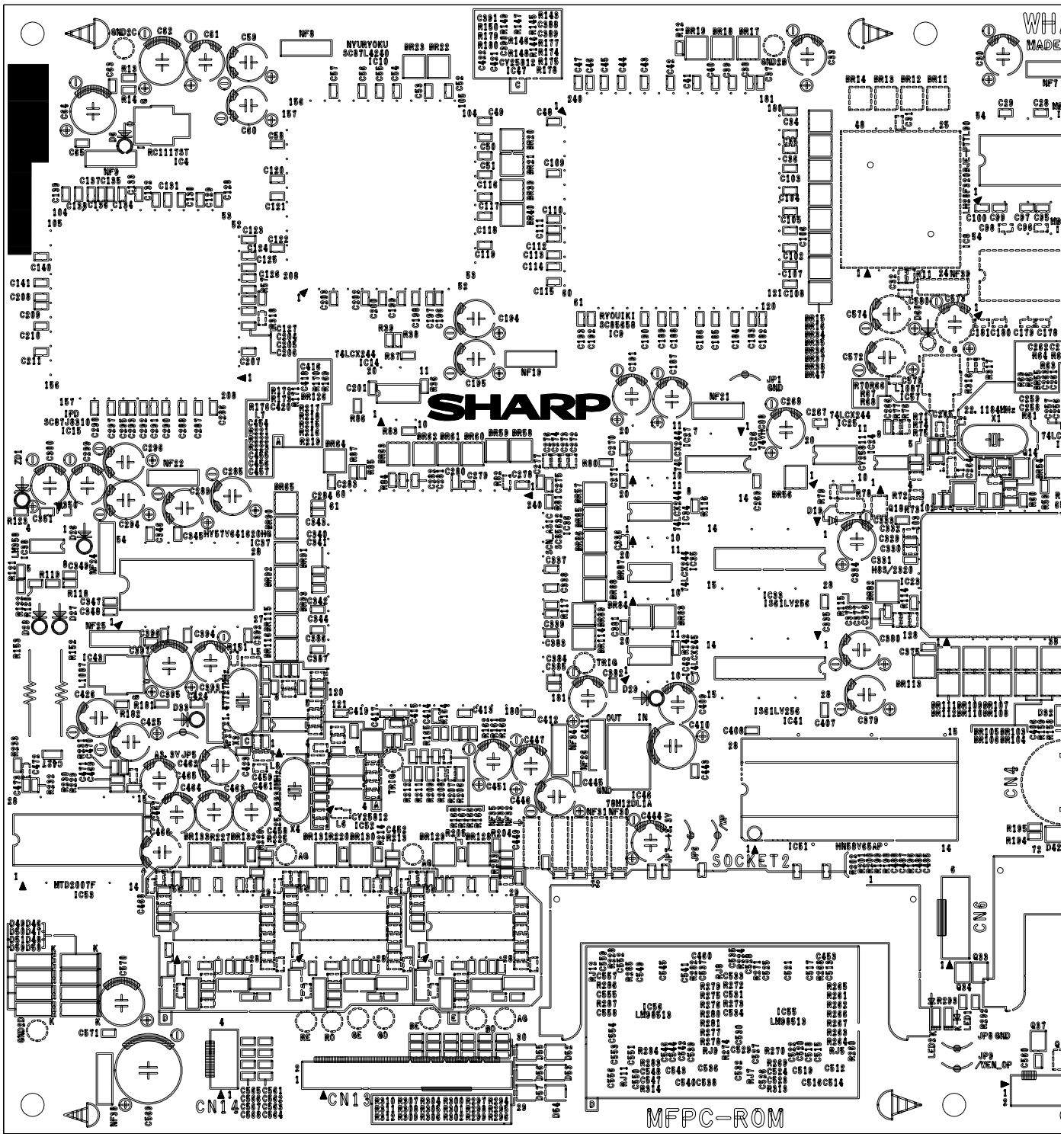

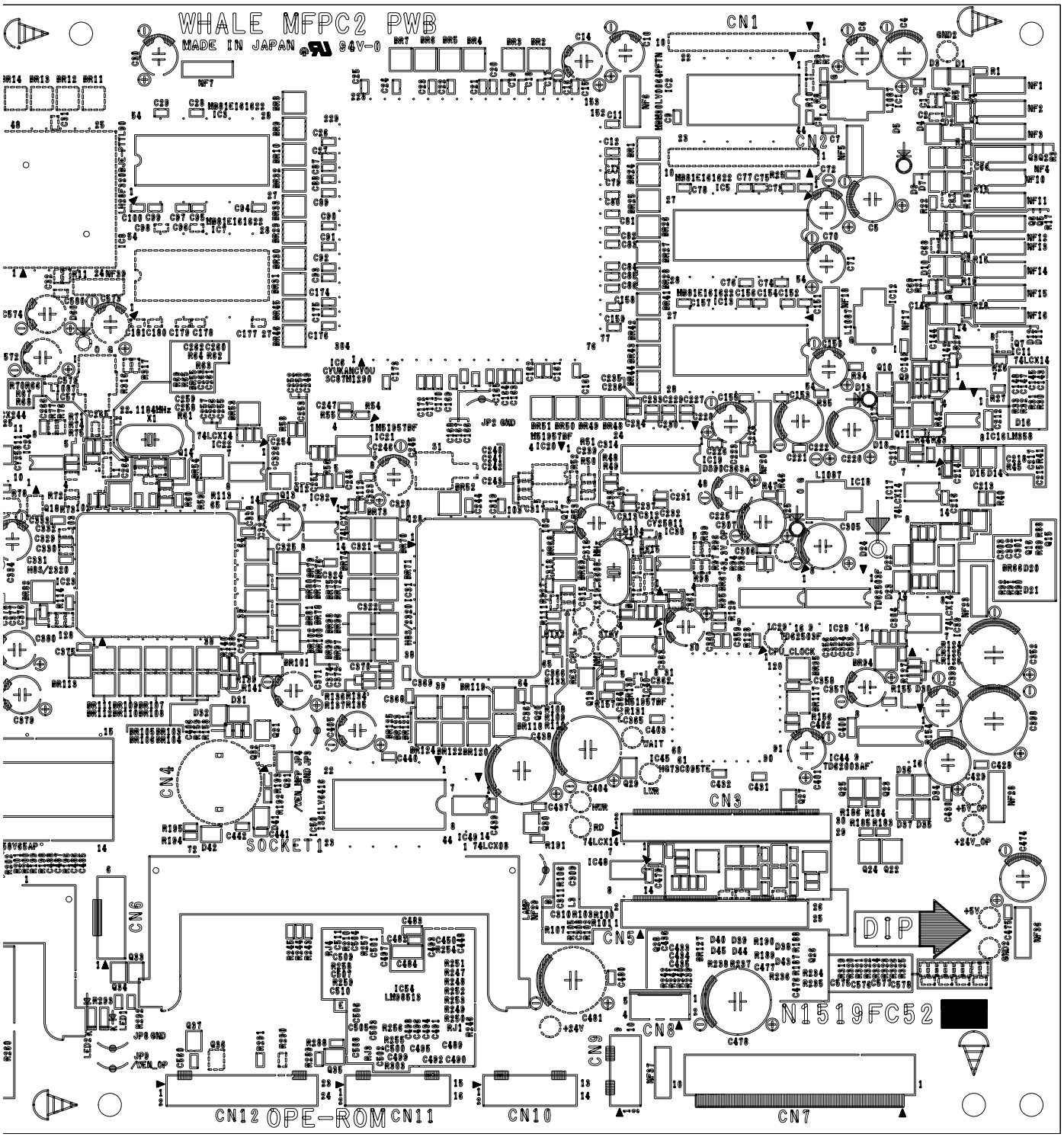
WHALE MFPC2 PWB
MADE IN JAPAN 94V-0
CN1
CN2
CN3
CN4
CN5
CN6
CN7
CN8
CN9
CN10
CN11
CN12 OPE-ROM
SOCKET1
DIP
N1519FC52

SCANNER I/F PWB

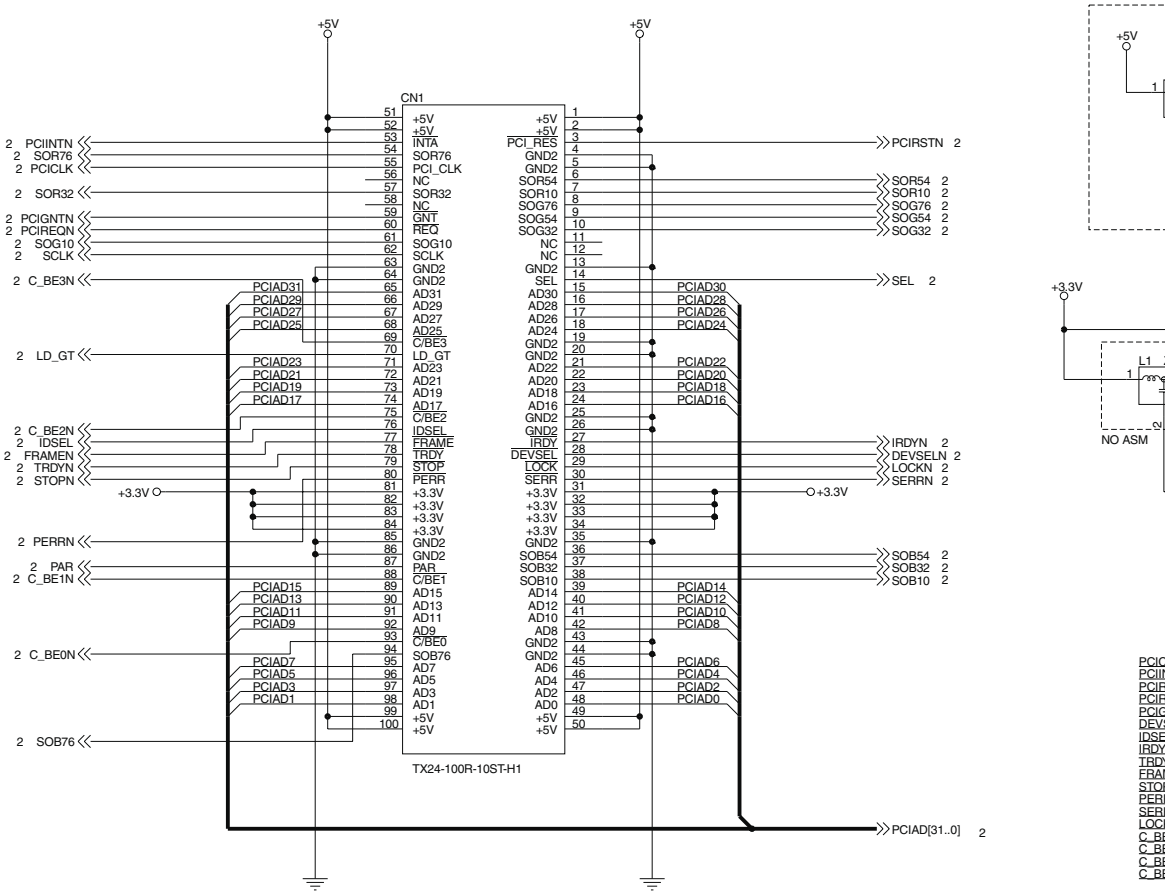

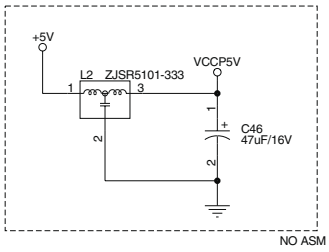

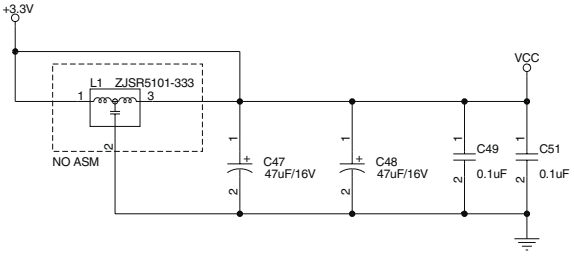

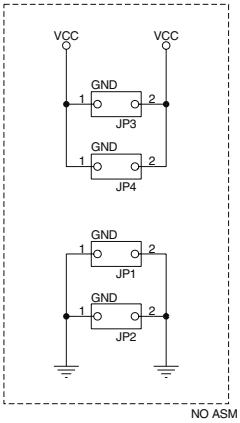

PCICLK	TP	TP26	PCICLK
PCIINTN	TP	TP46	PCIINTN
PCIRSTN	TP	TP61	PCIRSTN
PCIREQN	TP	TP37	PCIREQN
PCIGNTN	TP	TP49	PCIGNTN
DEVSELN	TP	TP60	DEVSELN
IDSEL	TP	TP54	IDSEL
IRDYN	TP	TP33	IRDYN
TRDYN	TP	TP55	TRDYN
FRAMEN	TP	TP29	FRAMEN
STOPN	TP	TP42	STOPN
PERRN	TP	TP34	PERRN
SERRN	TP	TP32	SERRN
LOCKN	TP	TP65	LOCKN
C_BE0N	TP	TP44	C_BE0N
C_BE1N	TP	TP16	C_BE1N
C_BE2N	TP	TP41	C_BE2N
C_BE3N	TP	TP38	C_BE3N

PCIAD0	TP	TP71	PCIAD0
PCIAD1	TP	TP4	PCIAD1
PCIAD2	TP	TP70	PCIAD2
PCIAD3	TP	TP3	PCIAD3
PCIAD4	TP	TP69	PCIAD4
PCIAD5	TP	TP2	PCIAD5
PCIAD6	TP	TP68	PCIAD6
PCIAD7	TP	TP1	PCIAD7
PCIAD8	TP	TP67	PCIAD8
PCIAD9	TP	TP36	PCIAD9
PCIAD10	TP	TP66	PCIAD10
PCIAD11	TP	TP43	PCIAD11
PCIAD12	TP	TP17	PCIAD12
PCIAD13	TP	TP56	PCIAD13
PCIAD14	TP	TP11	PCIAD14
PCIAD15	TP	TP12	PCIAD15
PCIAD16	TP	TP64	PCIAD16
PCIAD17	TP	TP53	PCIAD17
PCIAD18	TP	TP39	PCIAD18
PCIAD19	TP	TP40	PCIAD19
PCIAD20	TP	TP63	PCIAD20
PCIAD21	TP	TP52	PCIAD21
PCIAD22	TP	TP62	PCIAD22
PCIAD23	TP	TP30	PCIAD23
PCIAD24	TP	TP20	PCIAD24
PCIAD25	TP	TP50	PCIAD25
PCIAD26	TP	TP15	PCIAD26
PCIAD27	TP	TP45	PCIAD27
PCIAD28	TP	TP13	PCIAD28
PCIAD29	TP	TP14	PCIAD29
PCIAD30	TP	TP18	PCIAD30
PCIAD31	TP	TP19	PCIAD31

SEL	TP	TP48	SEL
LD_GT	TP	TP51	LD_GT
SCLK	TP	TP27	SCLK
SOR76	TP	TP21	SOR76
SOR54	TP	TP22	SOR54
SOR32	TP	TP23	SOR32
SOR10	TP	TP24	SOR10
SOG76	TP	TP35	SOG76
SOG54	TP	TP31	SOG54
SOG32	TP	TP28	SOG32
SOG10	TP	TP25	SOG10
SOB76	TP	TP58	SOB76
SOB54	TP	TP57	SOB54
SOB32	TP	TP47	SOB32
SOB10	TP	TP59	SOB10

SCANNER I/F PWB

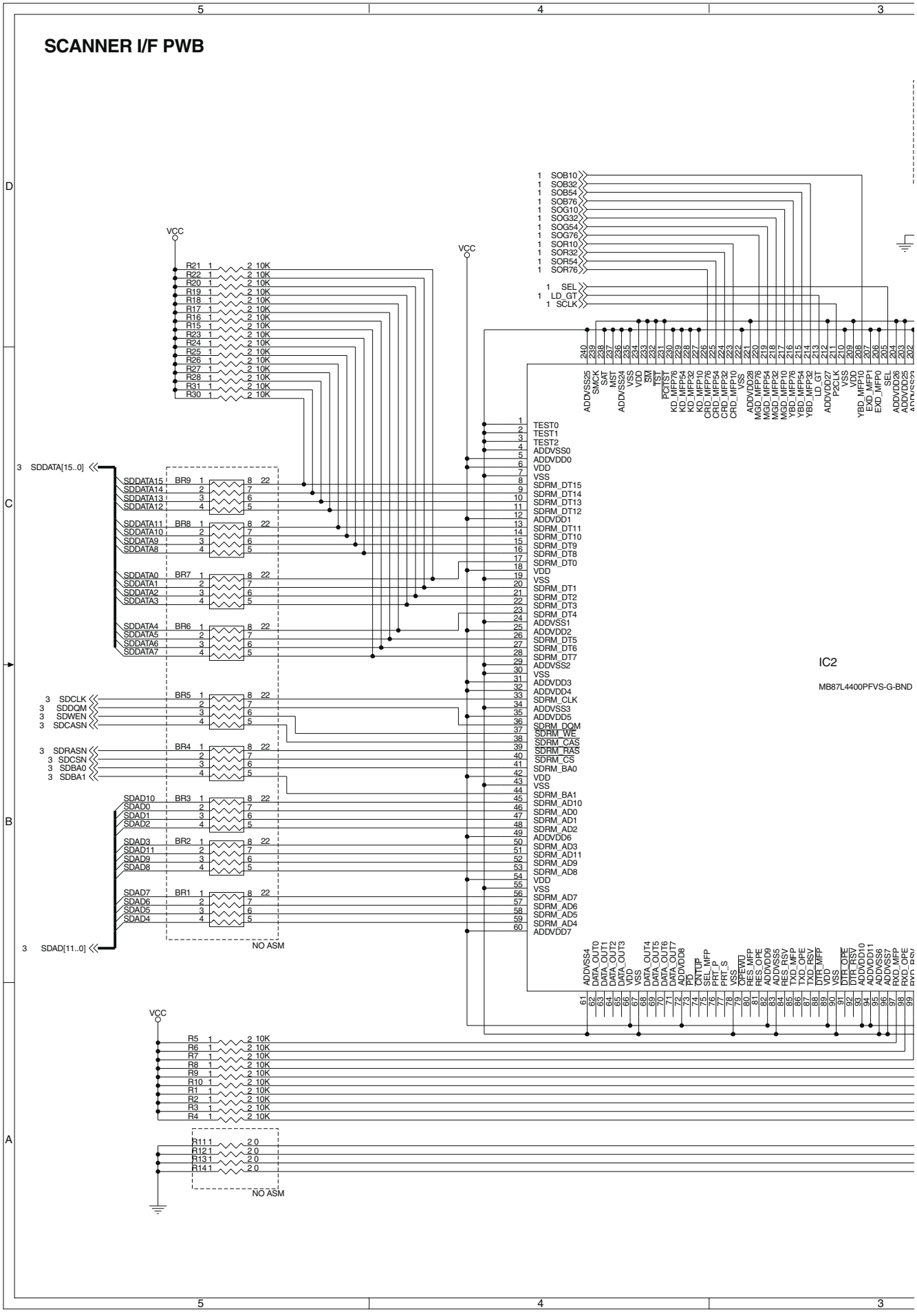

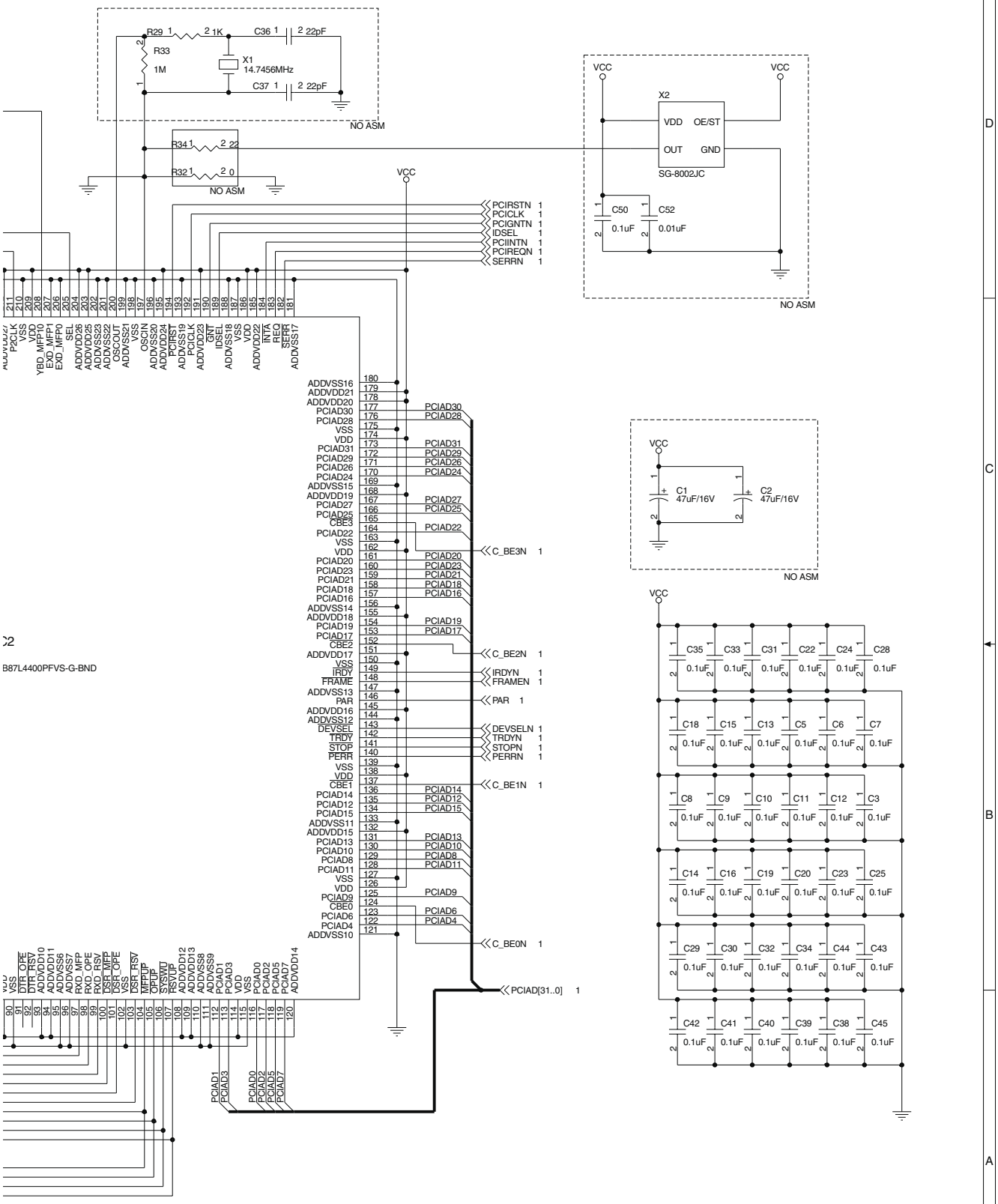
R29 1 2 1K
C36 1 2 22pF
R33
1M
X1
14.7456MHz
C37 1 2 22pF
NO ASM
R34 1 2 22
R32 1 2 0
NO ASM
VCC
X2
VDD OE/ST
OUT GND
SG-8002JC
C50 0.1uF
C52 0.01uF
NO ASM
PCIRSTN 1
PCICLK 1
PCIGNTN 1
IDSEL 1
PCIINTN 1
PCIREQN 1
SERRN 1
C_BE3N 1
C_BE2N 1
IRDYN 1
FRAMEN 1
PAR 1
DEVSELN 1
TRDYN 1
STOPN 1
PERRN 1
C_BE1N 1
C_BE0N 1
PCIAD[31..0] 1
C1 47uF/16V
C2 47uF/16V
NO ASM
B87L4400PFVS-G-BND
0.1uF
0.01uF
47uF/16V

SCANNER I/F PWB

3/3

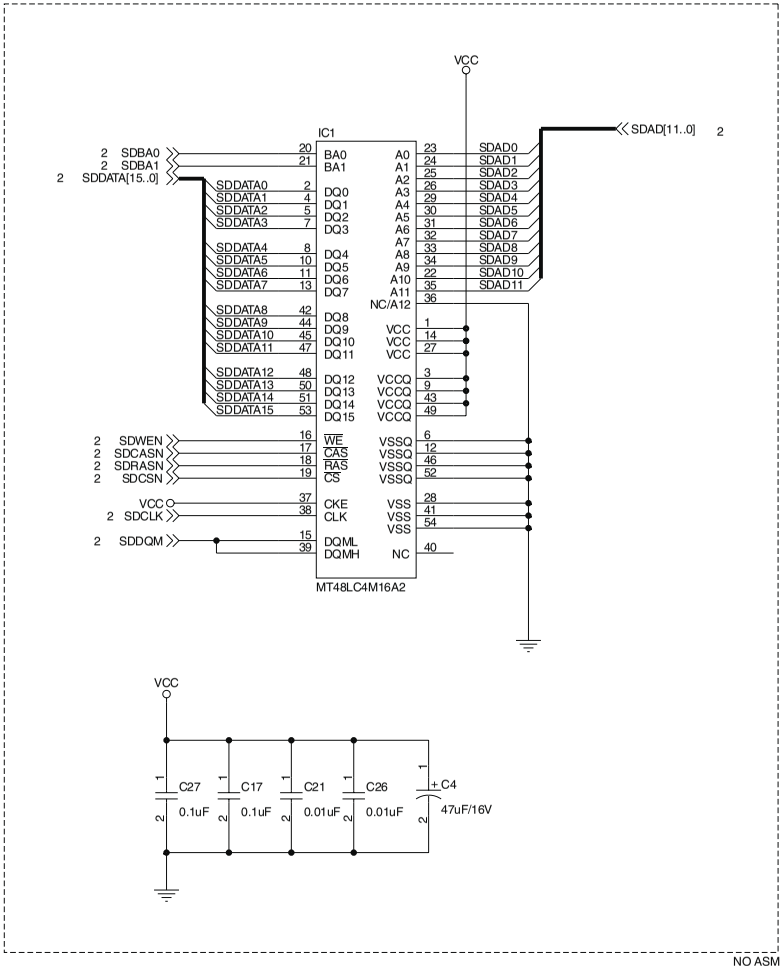

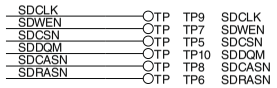

SCANNER I/F PWB

PARTS LAYOUT / 部品配置図

[PARTS SURFACE / 部品面**]**

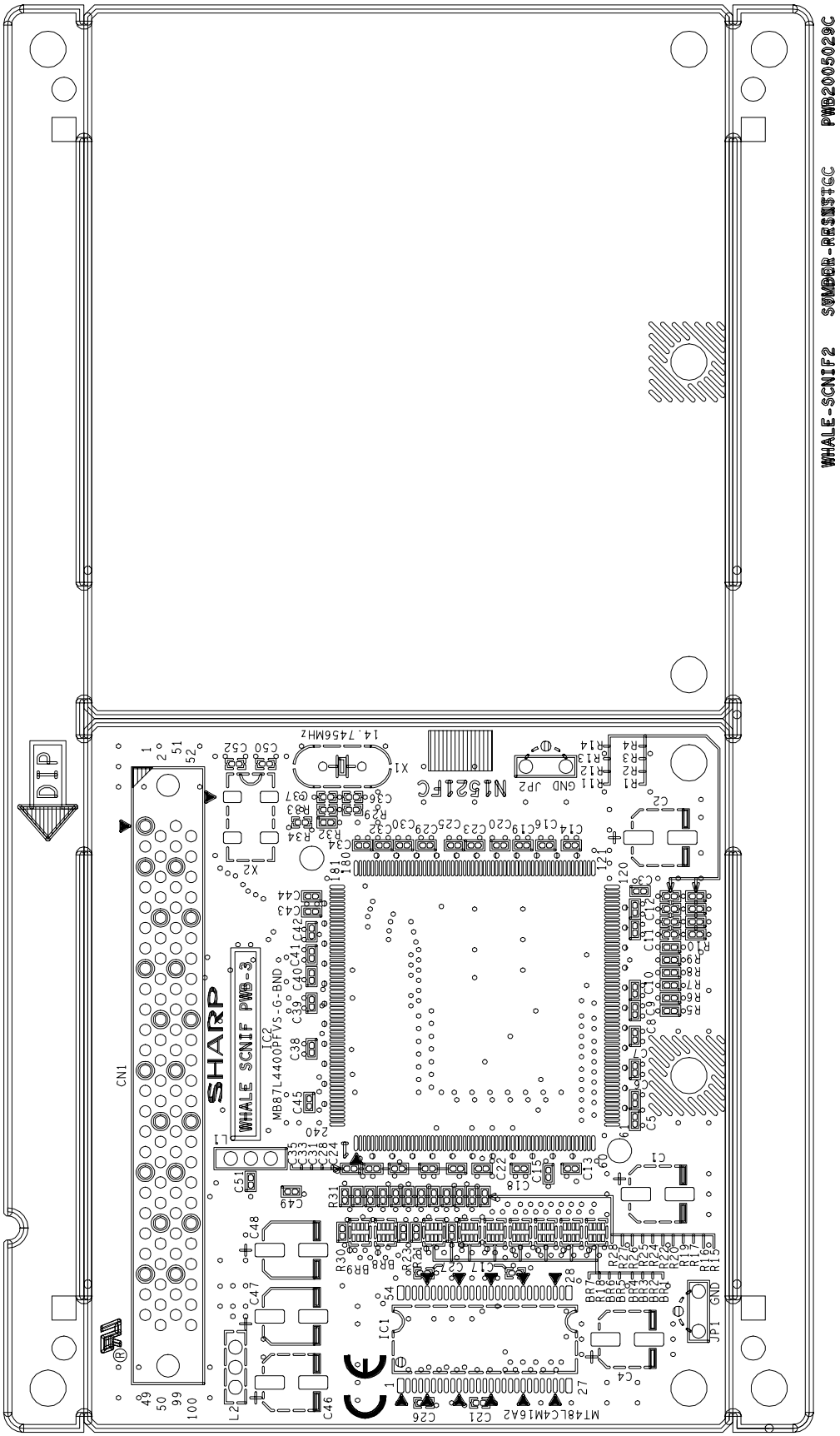

OPE KEY PWB

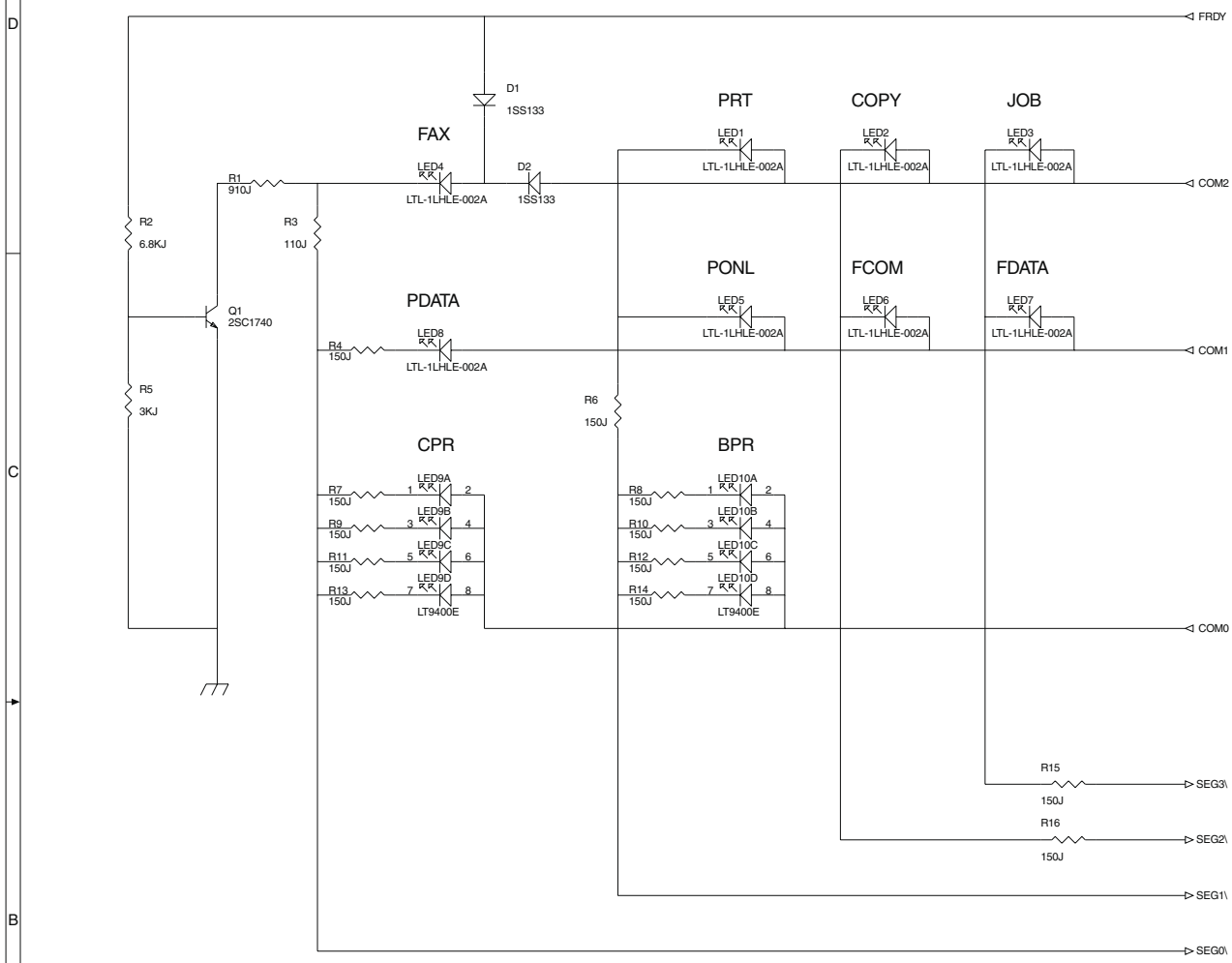
FRDY
D1
1SS133
PRT
COPY
JOB
FAX
LED1
LED2
LED3
LTL-1LHLE-002A
R1
910J
LED4
D2
1SS133
COM2
R2
6.8KJ
R3
110J
PONL
FCOM
FDATA
Q1
2SC1740
PDATA
LED5
LED6
LED7
R4
150J
LED8
COM1
R5
3KJ
R6
150J
CPR
BPR
LED9A
LED10A
R7
R8
LED9B
LED10B
R9
R10
LED9C
LED10C
R11
R12
LED9D
LED10D
R13
R14
LT9400E
COM0
R15
150J
SEG3\
R16
150J
SEG2\
SEG1\
SEG0\

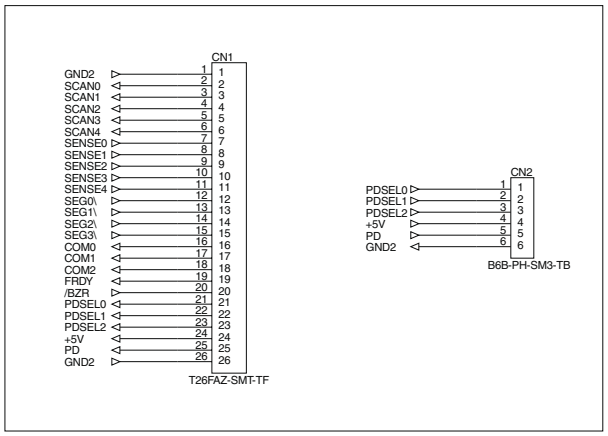
CN1
GND2
SCAN0
SCAN1
SCAN2
SCAN3
SCAN4
SENSE0
SENSE1
SENSE2
SENSE3
SENSE4
SEG0\
SEG1\
SEG2\
SEG3\
COM0
COM1
COM2
FRDY
/BZR
PDSEL0
PDSEL1
PDSEL2
+5V
PD
GND2
T26FAZ-SMT-TF
CN2
PDSEL0
PDSEL1
PDSEL2
+5V
PD
GND2
B6B-PH-SM3-TB

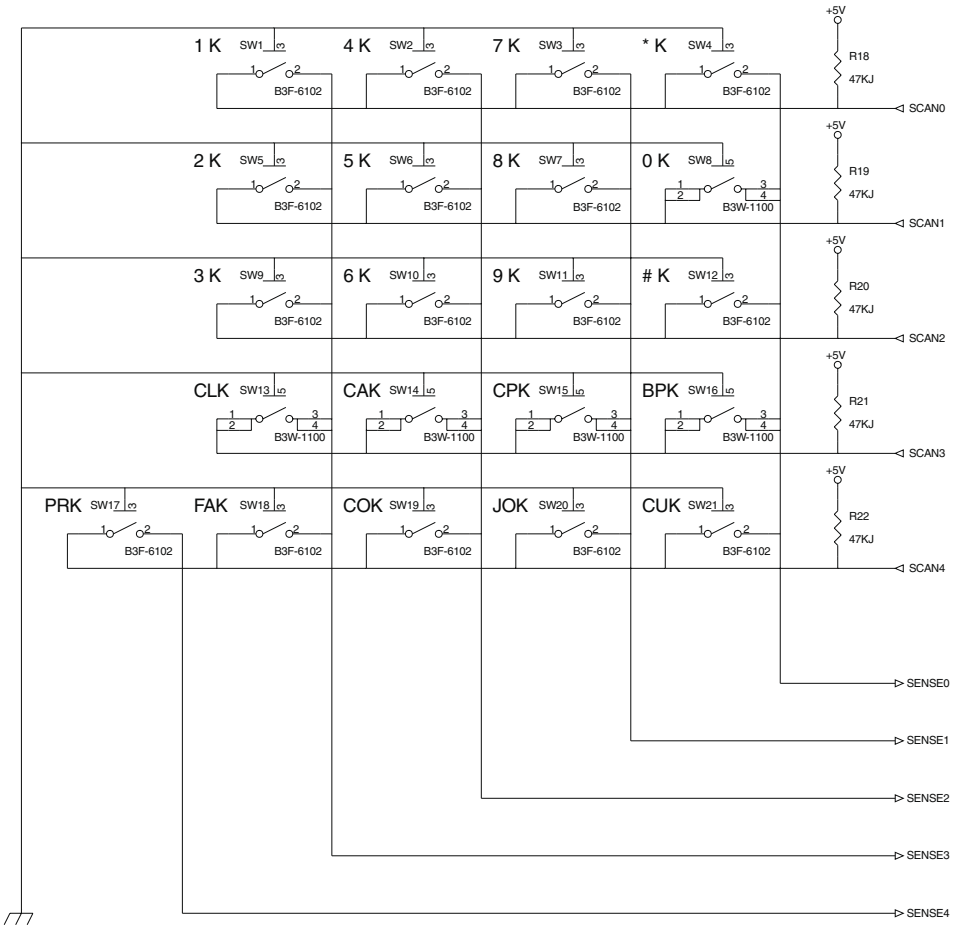
1 K SW1
4 K SW2
7 K SW3
* K SW4
2 K SW5
5 K SW6
8 K SW7
0 K SW8
3 K SW9
6 K SW10
9 K SW11
K SW12
CLK SW13
CAK SW14
CPK SW15
BPK SW16
PRK SW17
FAK SW18
COK SW19
JOK SW20
CUK SW21
B3F-6102
B3W-1100
+5V
R18
R19
R20
R21
R22
47KJ
SCAN0
SCAN1
SCAN2
SCAN3
SCAN4
SENSE0
SENSE1
SENSE2
SENSE3
SENSE4

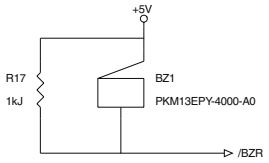
+5V
R17
1kJ
BZ1
PKM13EPY-4000-A0
/BZR

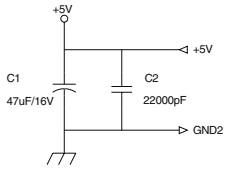
+5V
+5V
C1
47uF/16V
C2
22000pF
GND2

OPE PWB / オペキーPWB

PARTS LAYOUT / 部品配置図

[PARTS SURFACE / 部品面**]**

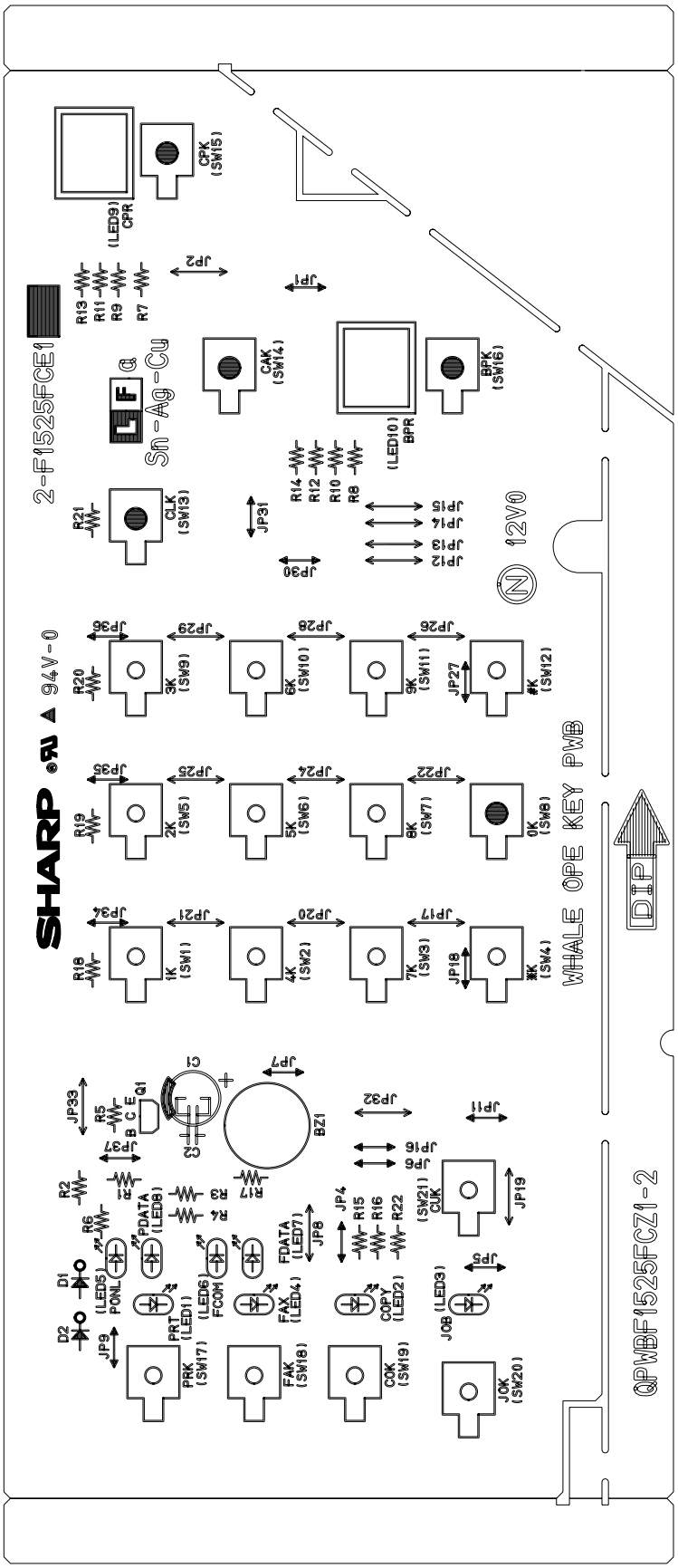

OPE PWB / オペキー**PWB**

PARTS LAYOUT / 部品配置図

[SOLDER SURFACE / 半田面**]**

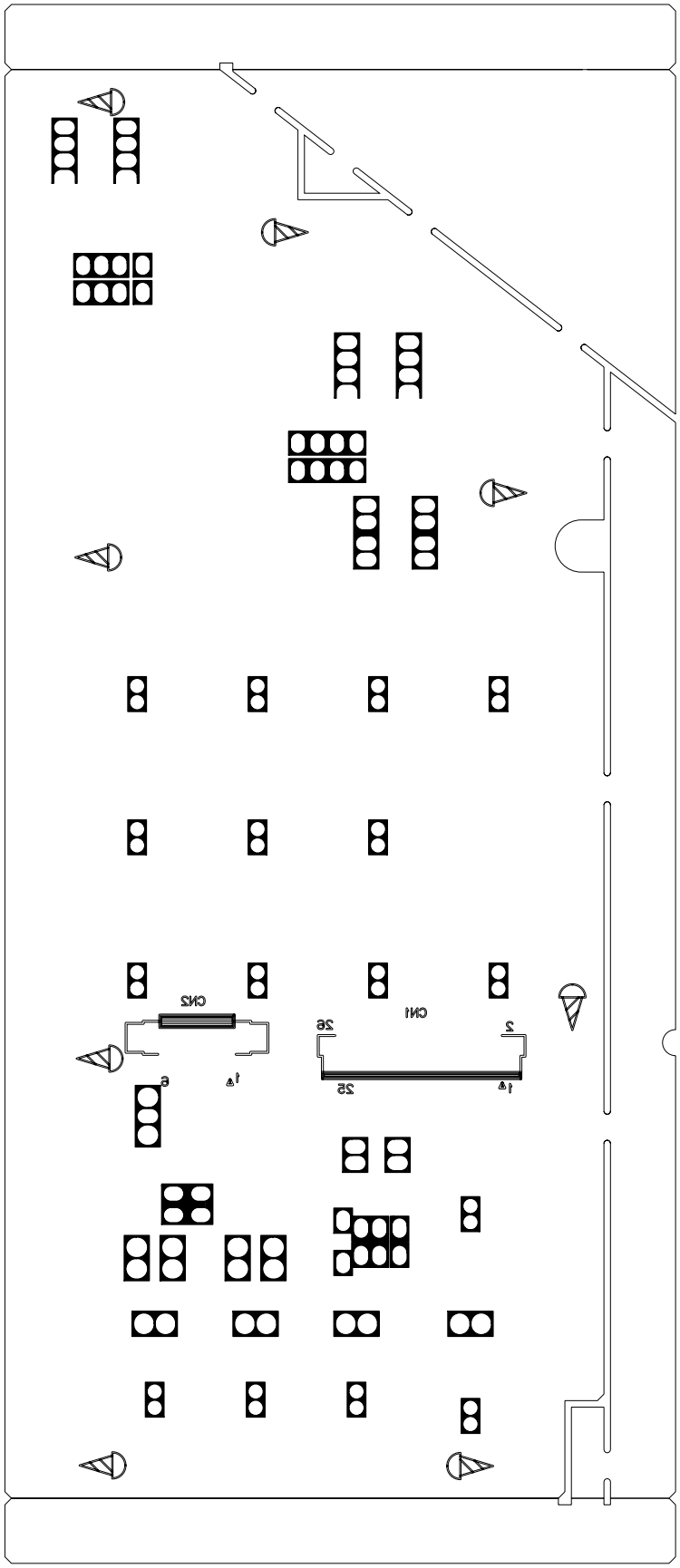

F. PROCESS CONTROL PWB / プロセスコントロール PWB

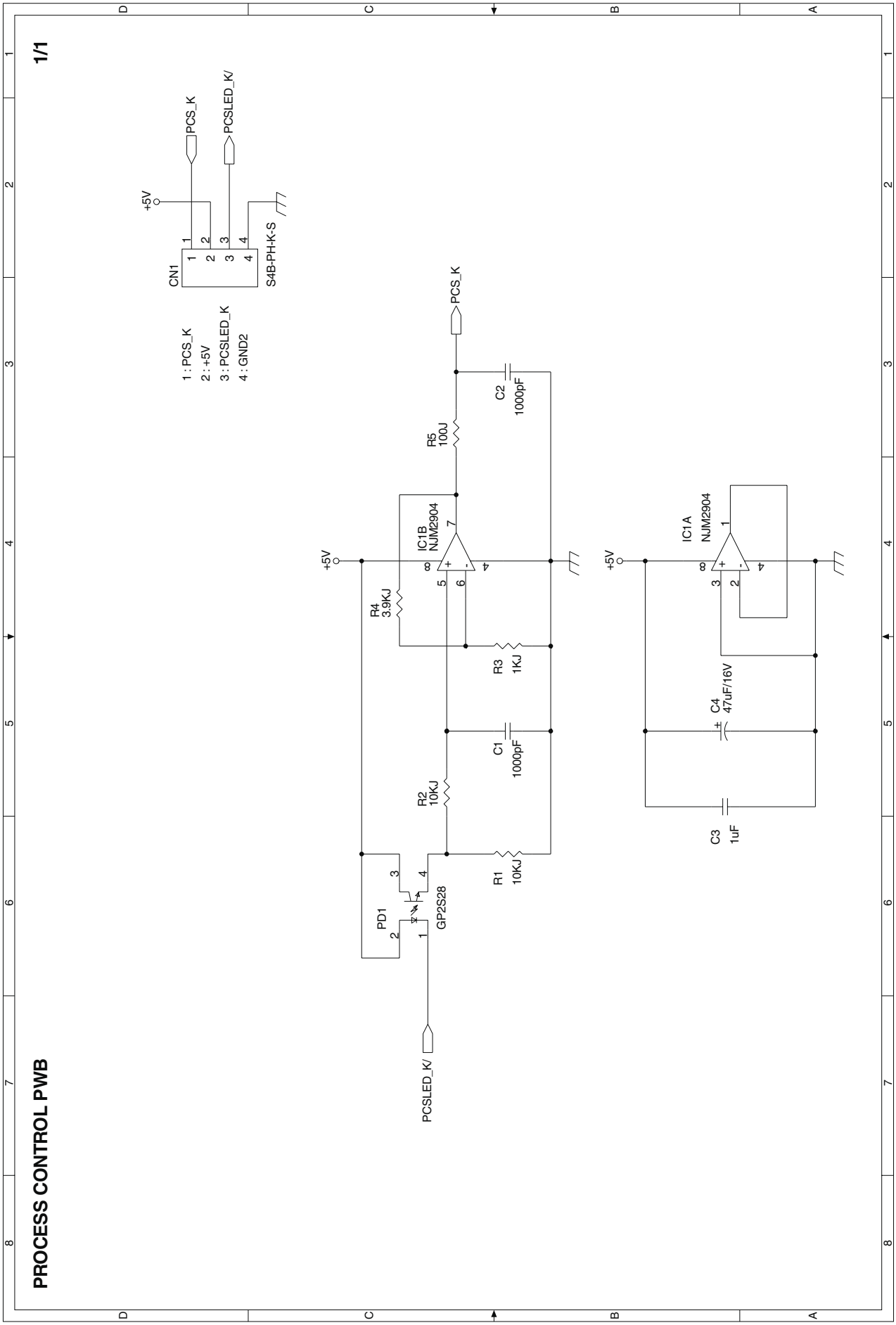

PROCESS CONTROL PWB / プロセスコントロールPWB

PARTS LAYOUT / 部品配置図

[PARTS SURFACE / 部品面]

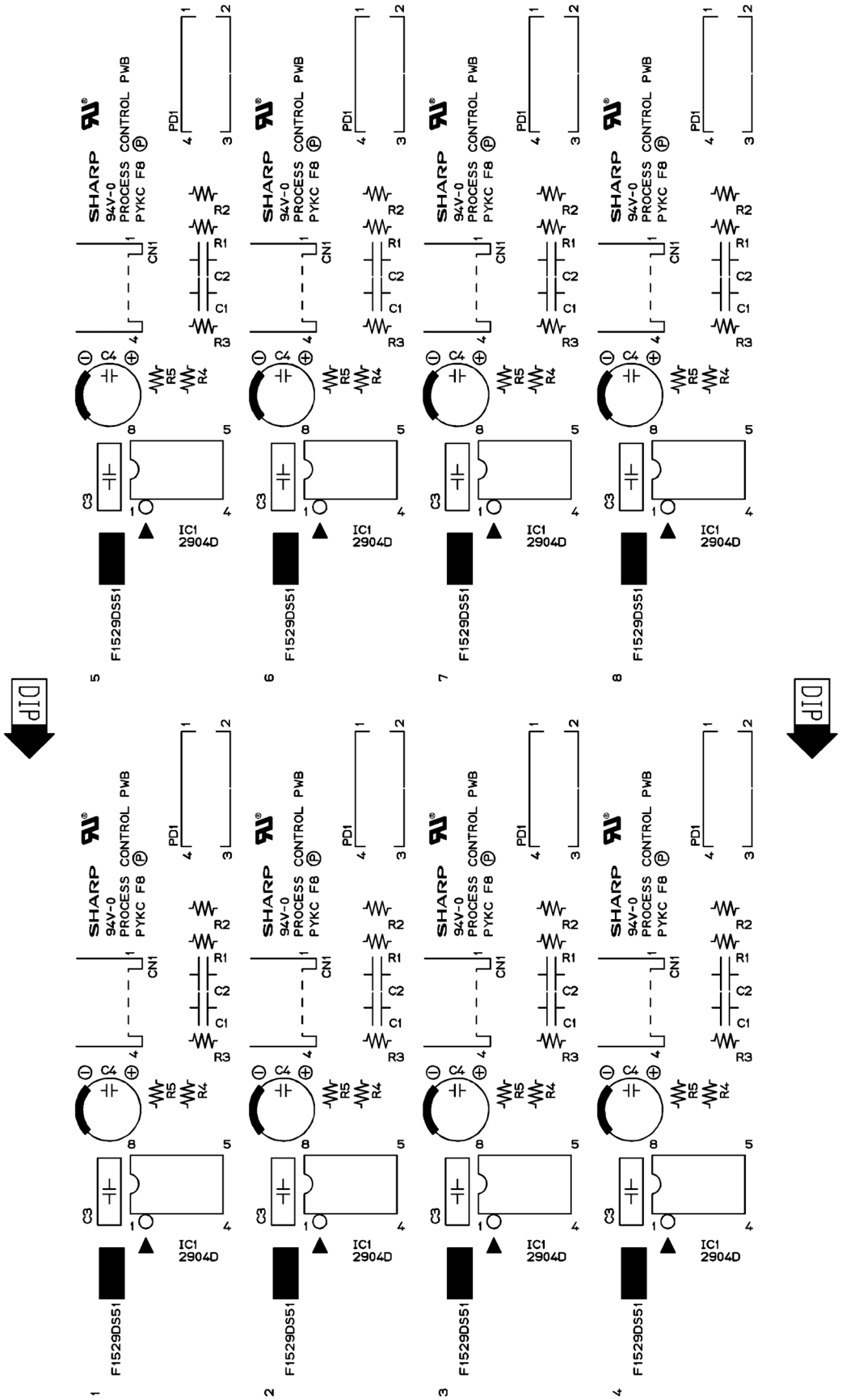

G. LED-DL PWB

LED-DL PWB

1/1

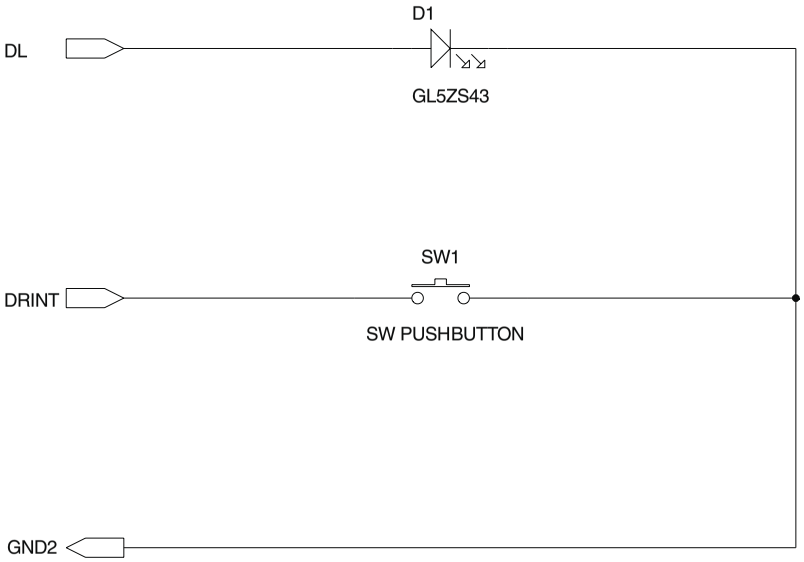

ハーネス直出し

1	DL(BR)
2	DRINT(BL)
3	GND2(GY)

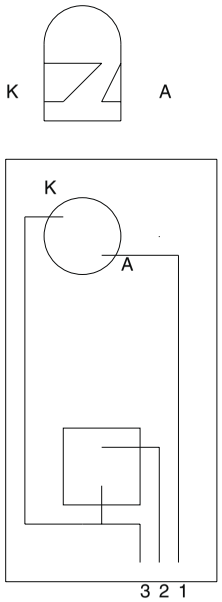

部品面から見た図

{View from parts side}

LED-DL PWB

PARTS LAYOUT / 部品配置図

[PARTS SURFACE / 部品面**]**

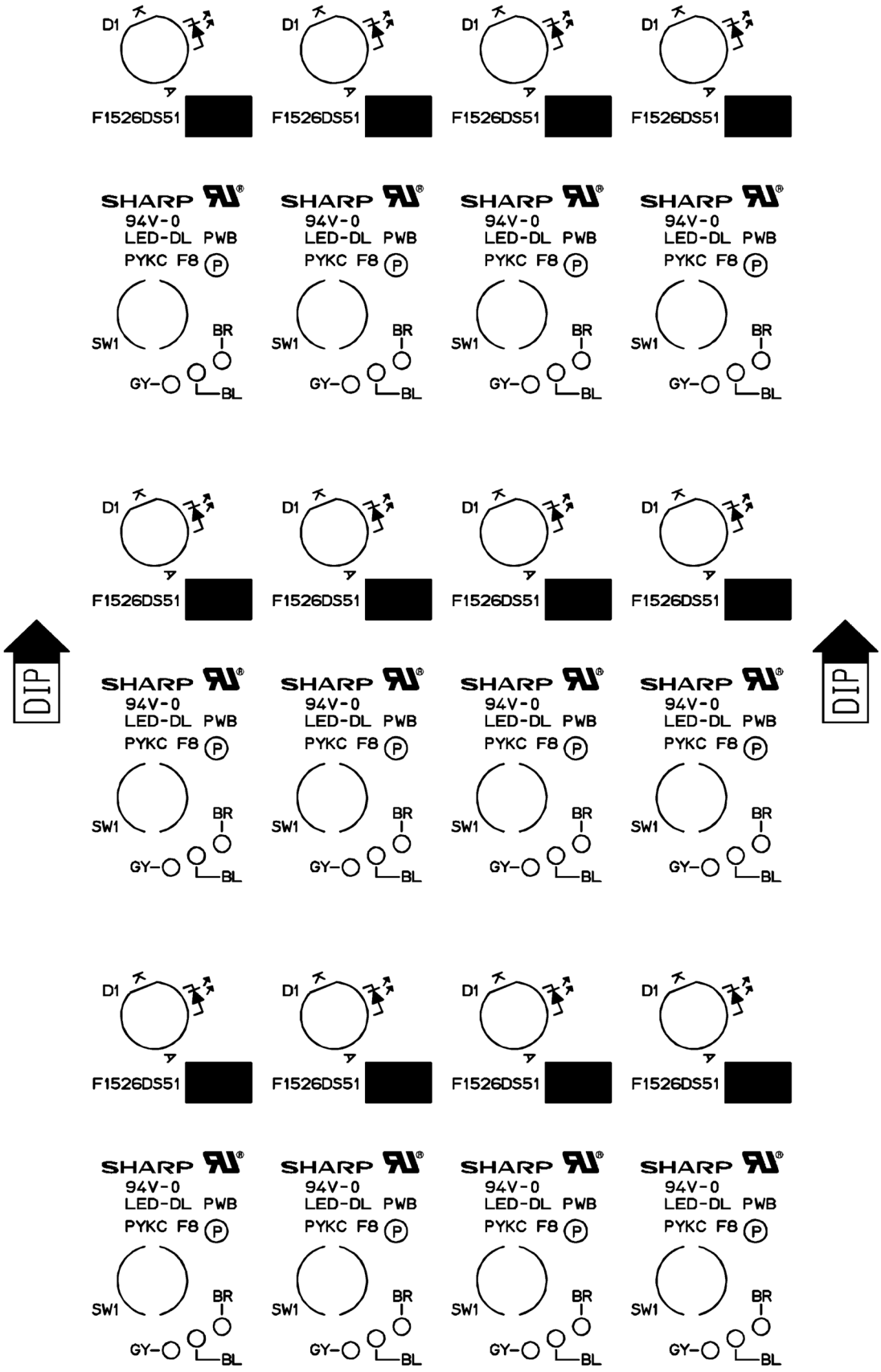

H. LVDS/INV PWB

LVDS/INV PWB

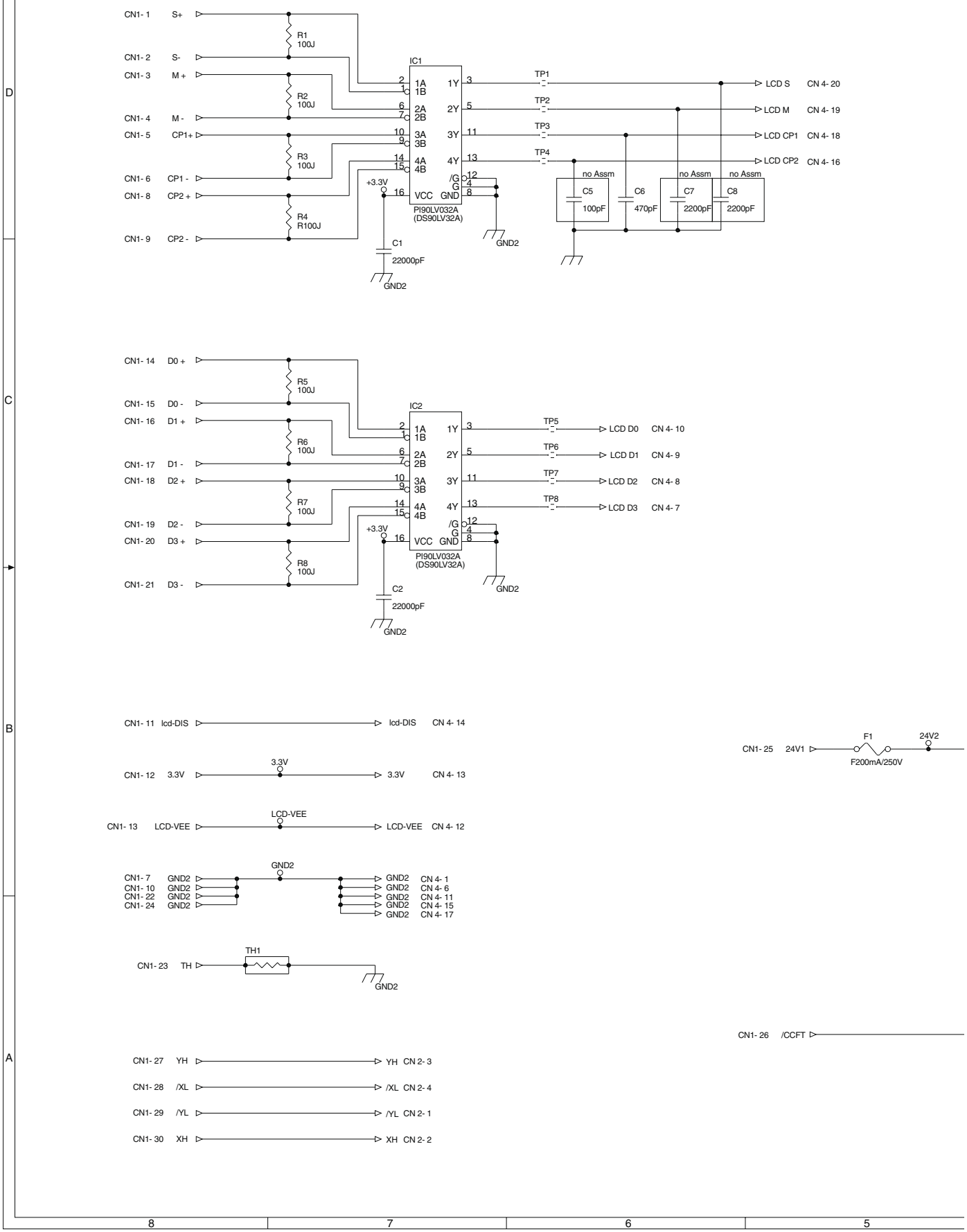

CN 1

1	LCD S+
2	LCD S-
3	LCD M+
4	LCD M-
5	LCD CP1+
6	LCD CP1-
7	GND2
8	LCD CP2+
9	LCD CP2-
10	GND2
11	lcd DIS
12	3.3V
13	LCD-VEE
14	LCD D0+
15	LCD D0-
16	LCD D1+
17	LCD D1-
18	LCD D2+
19	LCD D2-
20	LCD D3+
21	LCD D3-
22	GND2
23	TH
24	GND2
25	24V1
26	/CCFT
27	YH
28	/XL
29	/YL
30	XH

30FMZ-BT

CN 2

1	/YL
2	XH
3	YH
4	/XL

04FM-1.0BT

CN 4

1	Vss(GND2)
2	N.C.
3	N.C.
4	N.C.
5	N.C.
6	Vss(GND2)
7	LCD D3
8	LCD D2
9	LCD D1
10	LCD D0
11	Vss(GND2)
12	LCD-VEE
13	3.3V
14	lcd-DIS
15	Vss(GND2)
16	LCD CP2
17	Vss(GNS2)
18	LCD CP1
19	LCD M
20	LCD S

20FLS-SM1-TB

!! 注意 !!　　枠内高圧回路の為、その他回路とは完全に分離する事

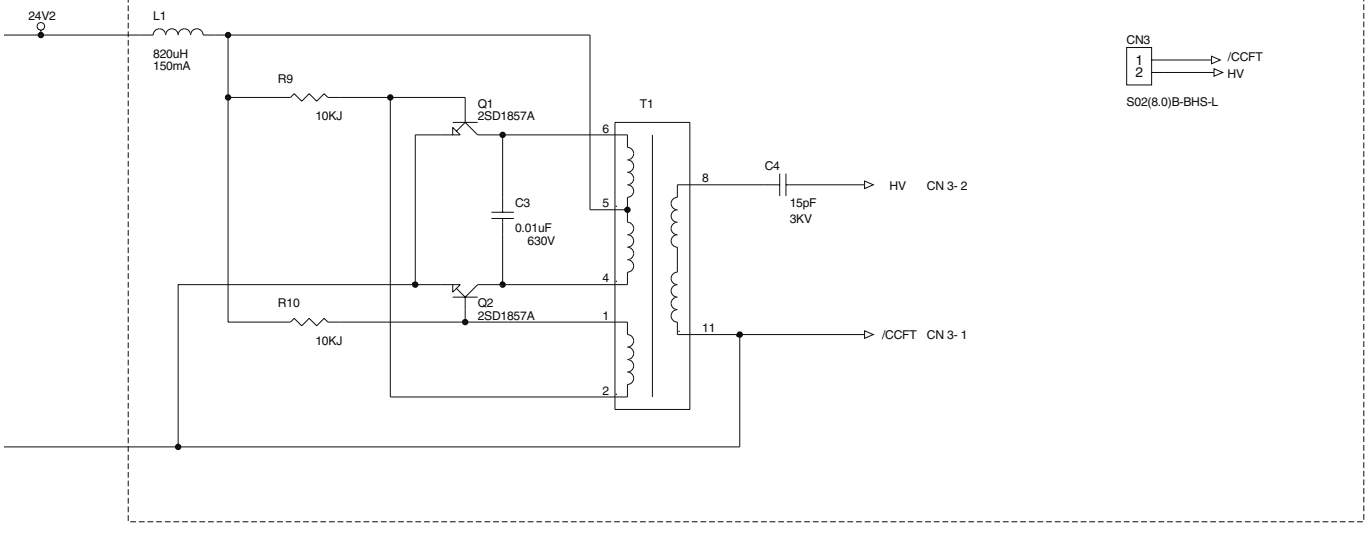

CN3

1	/CCFT
2	HV

S02(8.0)B-BHS-L

LVDS/INV PWB

PARTS LAYOUT / 部品配置図

[PARTS SURFACE / 部品面**]**

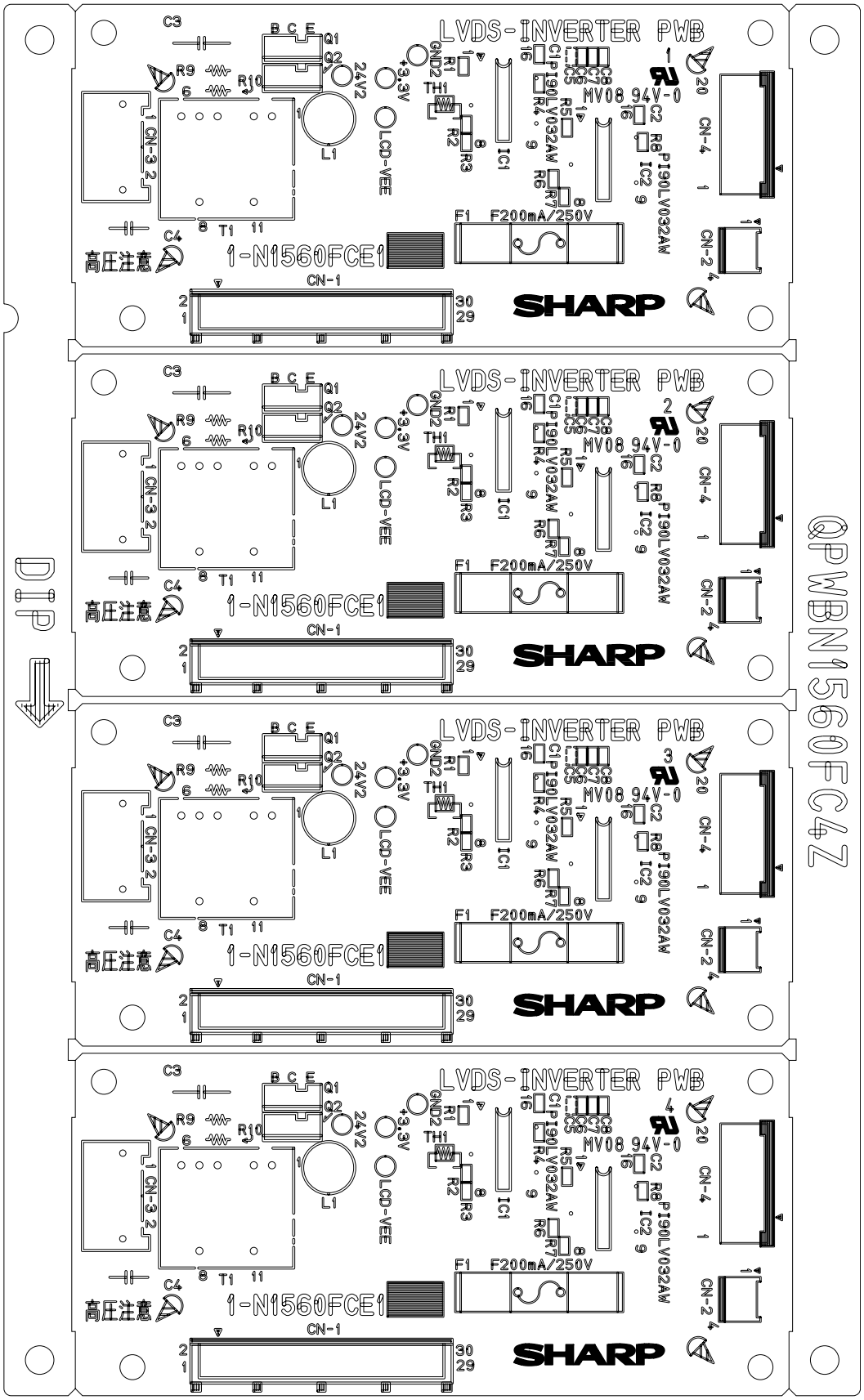

I. DRIVER PWB

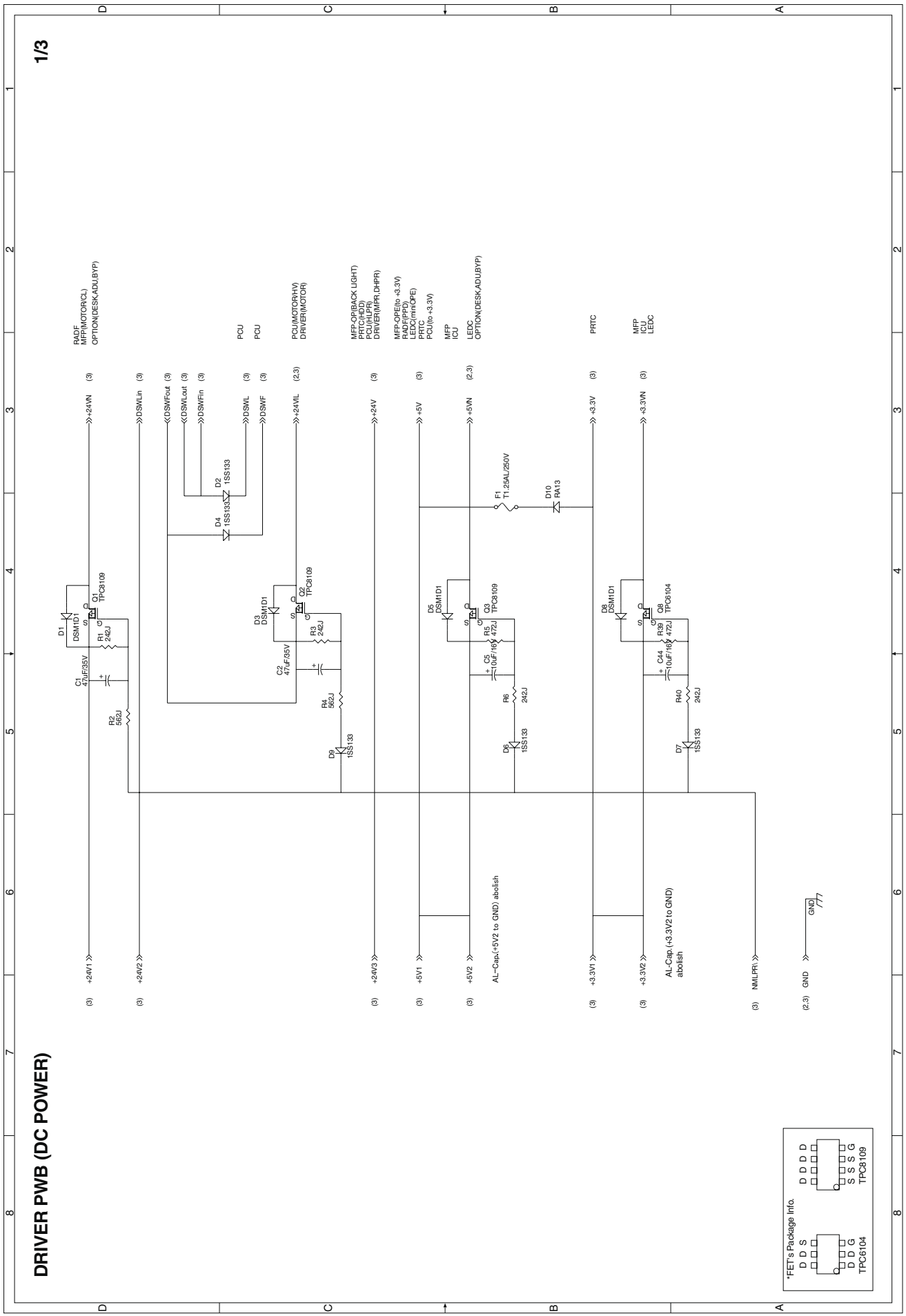
DRIVER PWB (DC POWER)
1/3
*FET's Package Info.
TPC6104
TPC8109
RADF
MFP(MOTOR/CL)
OPTION(DESK,ADJ,BYP)
PCU
PCU
PCU(MOTOR/HV)
DRIVER(MOTOR)
MFP-OP(BACK LIGHT)
PRTC(HDD)
PCU(HEATER)
DRIVER(MPR,DHPR)
MFP-OPE(to +3.3V)
RADF(PPD)
LEDC(mini OPE)
PRTC
PCU(to +3.3V)
MFP
IOU
LEDC
OPTION(DESK,ADJ,BYP)
PRTC
MFP
ICU
LEDC
AL-Cap.(+5V2 to GND) abolish
AL-Cap.(+3.3V2 to GND) abolish
+24VN
+24V1
+24V2
+24V3
+24VIL
+24V
+5V
+5VN
+5V1
+5V2
+3.3V
+3.3VN
+3.3V1
+3.3V2
DSWLin
DSWFout
DSWLout
DSWFin
DSWL
DSWF
NMLPRI
GND
D1 DSM1D1
D2 1SS133
D3 DSM1D1
D4 1SS133
D5 DSM1D1
D6 1SS133
D7 1SS133
D8 DSM1D1
D9 1SS133
D10 RA13
Q1 TPC8109
Q2 TPC8109
Q3 TPC8109
Q8 TPC6104
F1 T1.25AL/250V
C1 47uF/35V
C2 47uF/35V
C5 10uF/16V
C44 10uF/16V
R1 24ΩJ
R2 56ΩJ
R3 24ΩJ
R4 56ΩJ
R5 47ΩJ
R6 24ΩJ
R38 47ΩJ
R40 24ΩJ

DRIVER PWB (MOTOR_DRIVE)

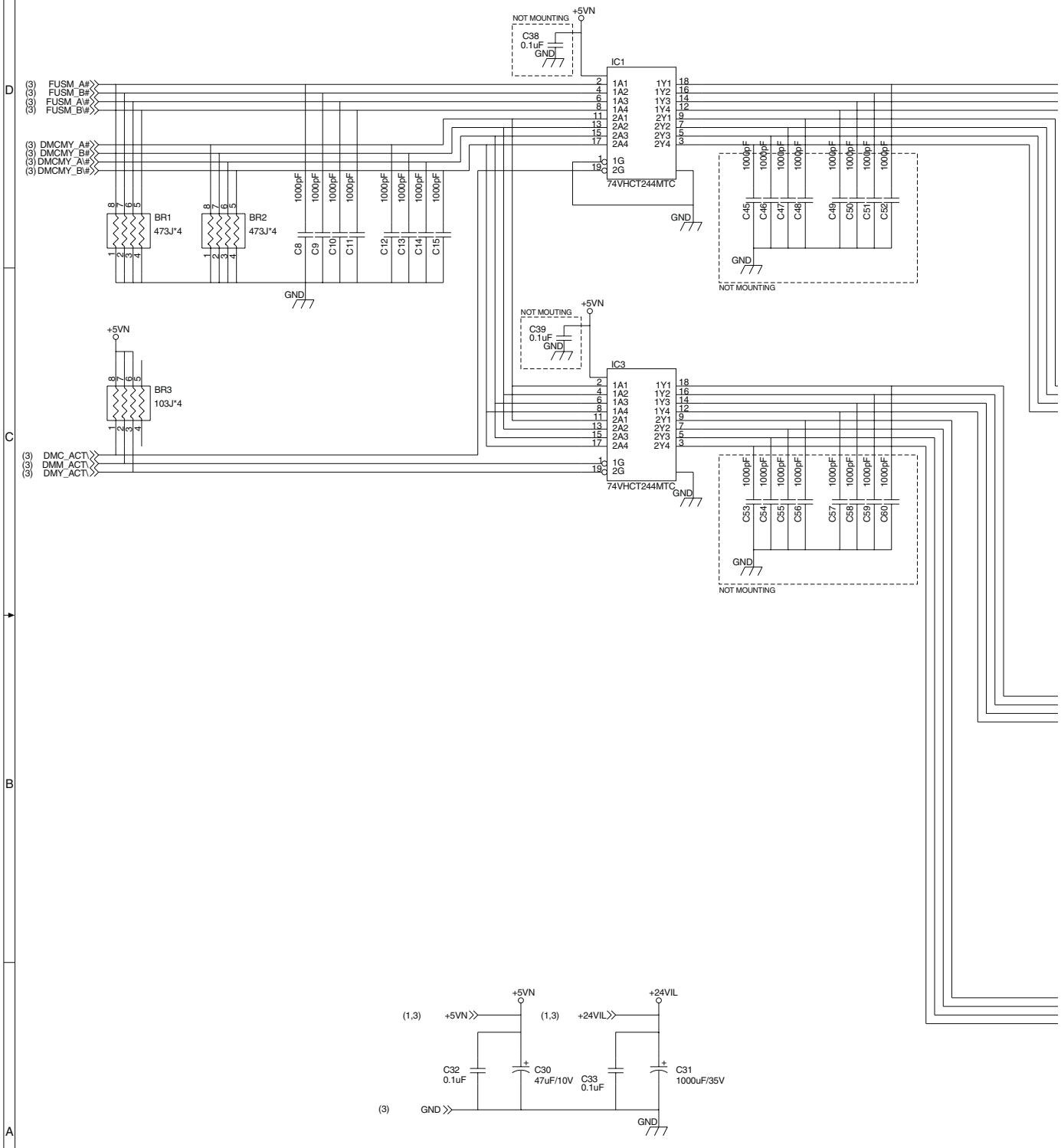

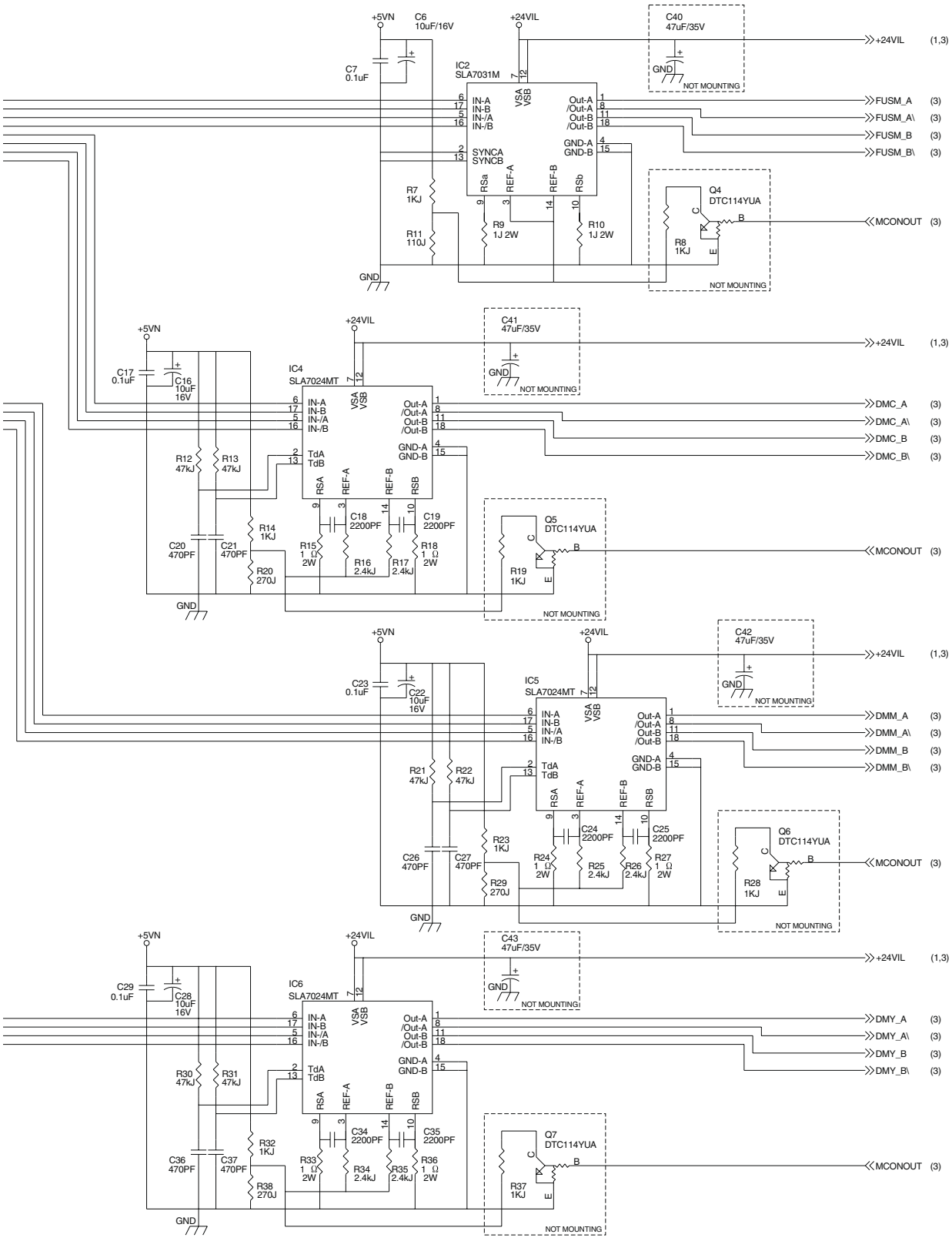
+5VN
C6 10uF/16V
+24VIL
C40 47uF/35V
C7 0.1uF
IC2 SLA7031M
+24VIL (1,3)
FUSM_A (3)
FUSM_A\ (3)
FUSM_B (3)
FUSM_B\ (3)
MCONOUT (3)
NOT MOUNTING
C41 47uF/35V
C16 10uF 16V
C17 0.1uF
IC4 SLA7024MT
DMC_A (3)
DMC_A\ (3)
DMC_B (3)
DMC_B\ (3)
C42 47uF/35V
C22 10uF 16V
C23 0.1uF
IC5 SLA7024MT
DMM_A (3)
DMM_A\ (3)
DMM_B (3)
DMM_B\ (3)
C43 47uF/35V
C28 10uF 16V
C29 0.1uF
IC6 SLA7024MT
DMY_A (3)
DMY_A\ (3)
DMY_B (3)
DMY_B\ (3)
GND

DRIVER PWB (CONNECTER)

to FUSM

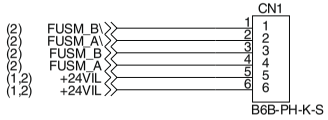

to PCU

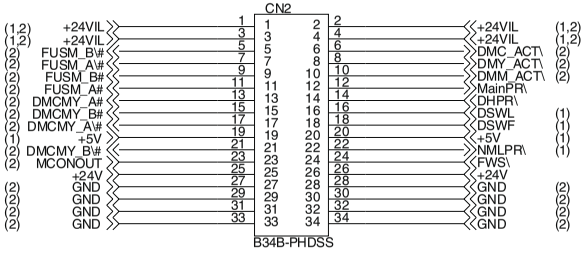

to DM HARNESS

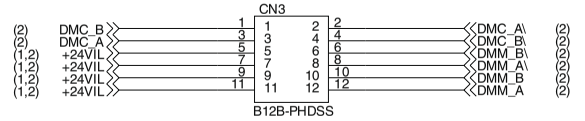

to DMY

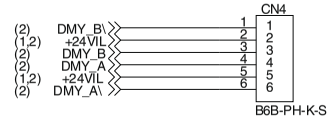

to ICU/LED

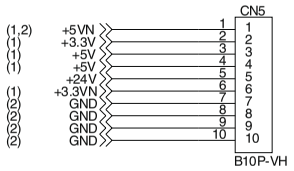

to DSWF

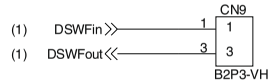

to MFP

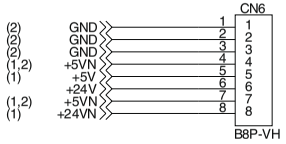

from DCPS

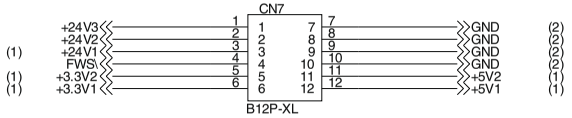

to OPTION

to AC

to DSWL

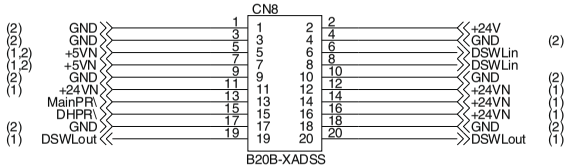

DRIVER PWB / ドライバーPWB

PARTS LAYOUT / 部品配置図

[PARTS SURFACE / 部品面**]**

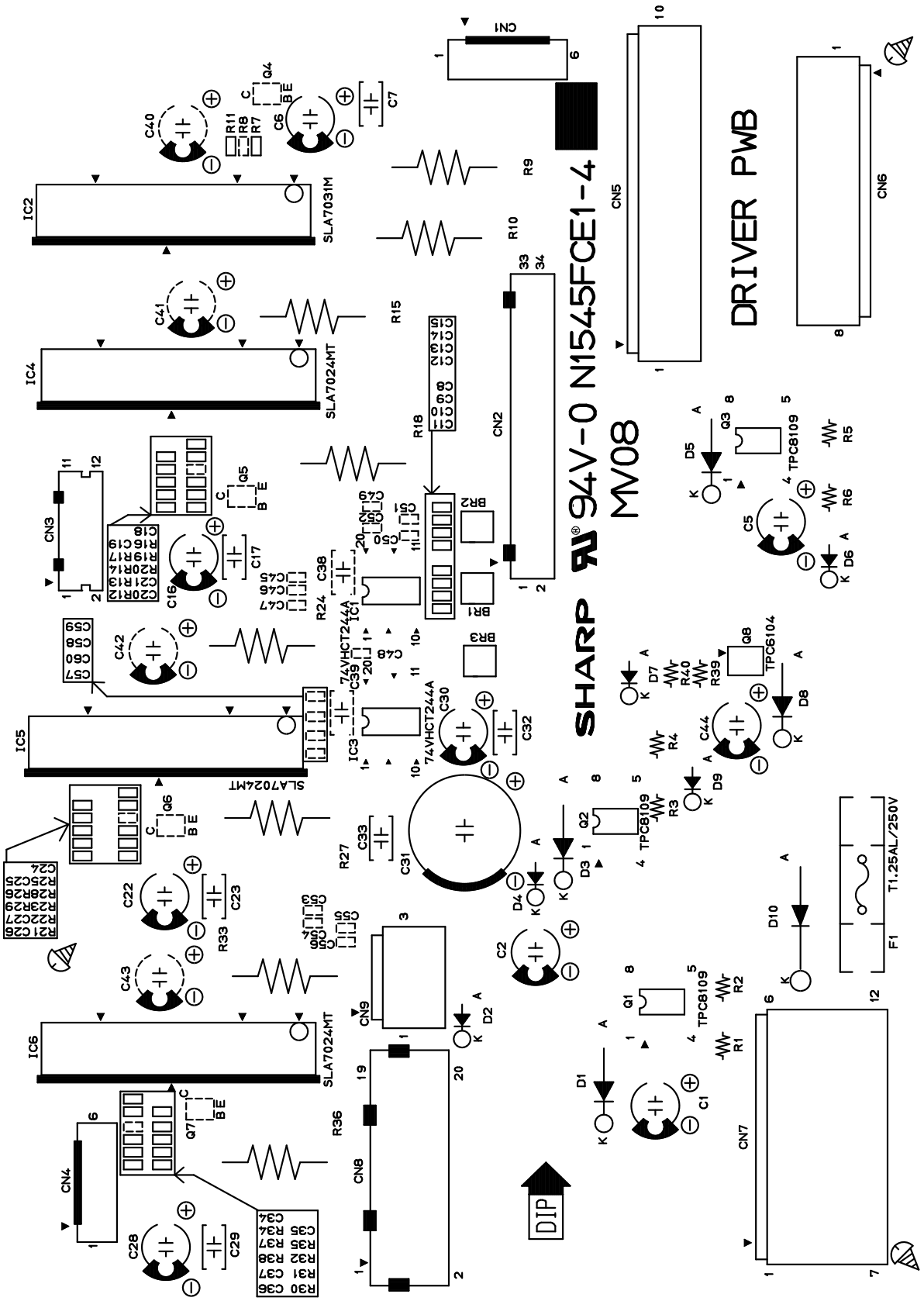

J. HDD PWB

HDD PWB

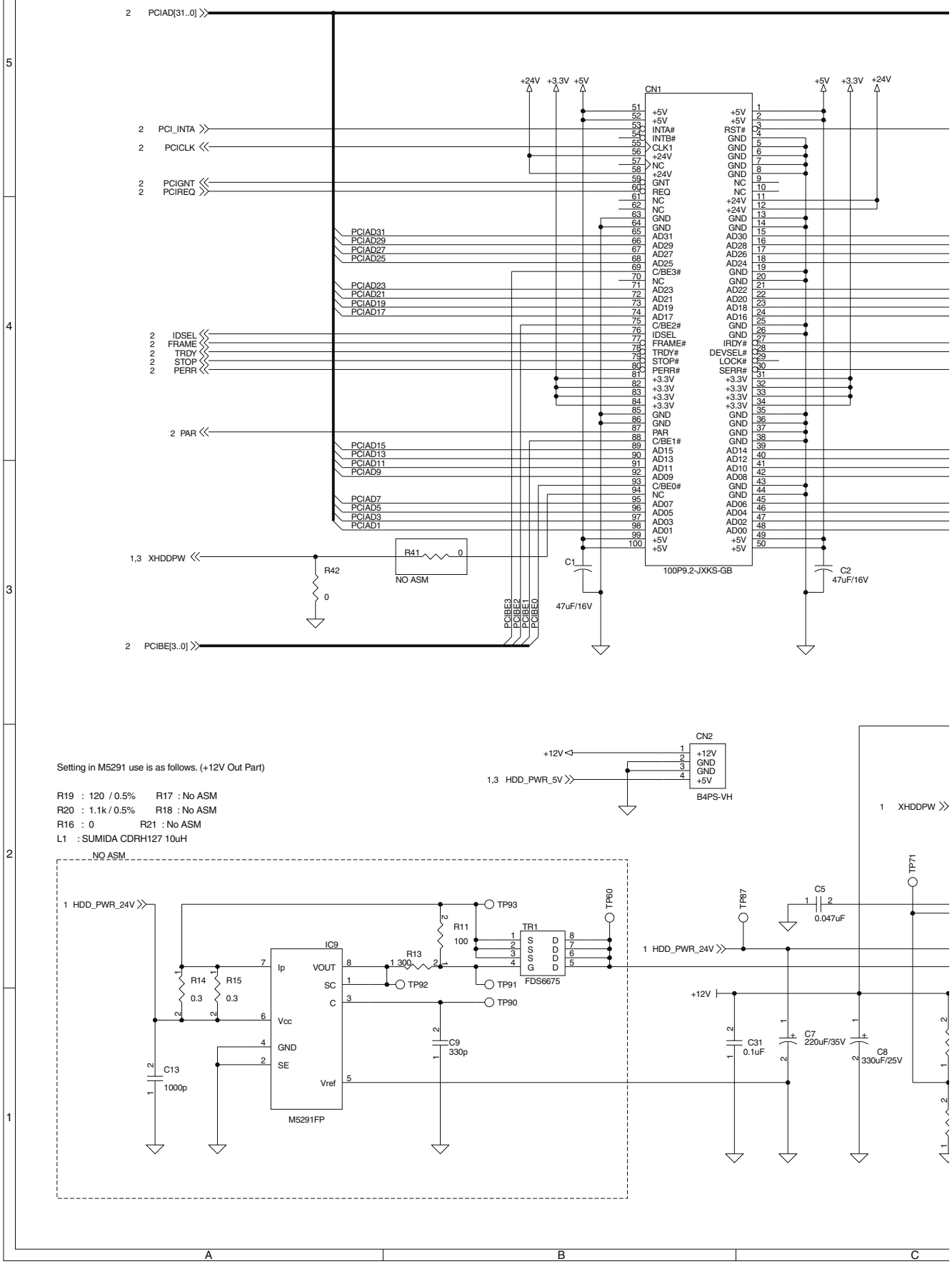

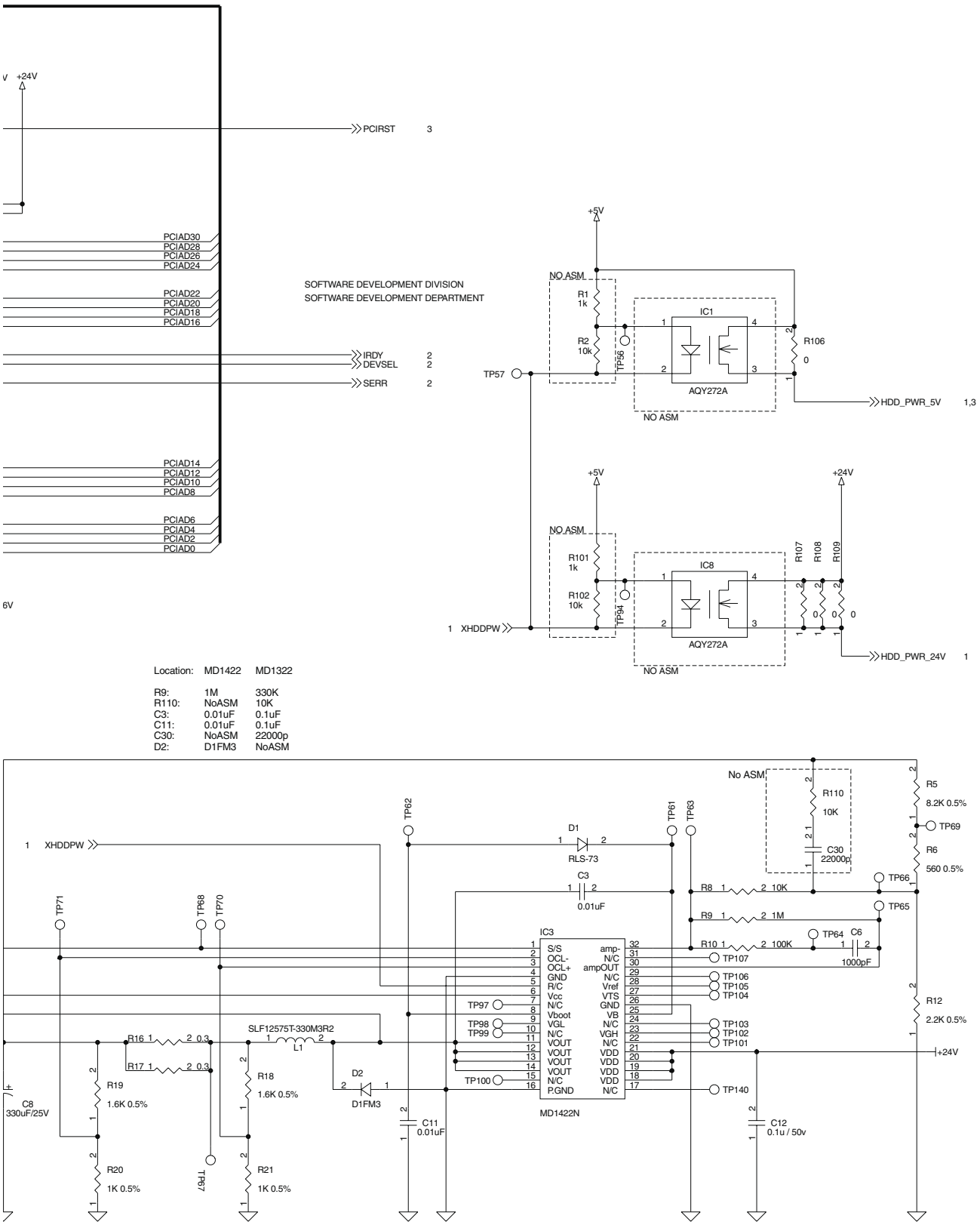
+24V
PCIRST 3
PCIAD30
PCIAD28
PCIAD26
PCIAD24
PCIAD22
PCIAD20
PCIAD18
PCIAD16
IRDY 2
DEVSEL 2
SERR 2
PCIAD14
PCIAD12
PCIAD10
PCIAD8
PCIAD6
PCIAD4
PCIAD2
PCIAD0
SOFTWARE DEVELOPMENT DIVISION
SOFTWARE DEVELOPMENT DEPARTMENT
+5V
NO ASM
R1 1k
R2 10k
TP56
IC1
AQY272A
R106 0
TP57
HDD_PWR_5V 1,3
+24V
R101 1k
R102 10k
TP94
IC8
R107
R108
R109
1 XHDDPW
HDD_PWR_24V 1
Location: MD1422 MD1322
R9: 1M 330K
R110: NoASM 10K
C3: 0.01uF 0.1uF
C11: 0.01uF 0.1uF
C30: NoASM 22000p
D2: D1FM3 NoASM
No ASM
R110 10K
C30 22000p
R5 8.2K 0.5%
TP69
R6 560 0.5%
TP66
TP65
TP64
C6 1000pF
TP62
TP61
TP63
D1 RLS-73
C3 0.01uF
R8 10K
R9 1M
R10 100K
TP71
TP68
TP70
IC3
S/S
OCL-
OCL+
GND
R/C
Vcc
N/C
Vboot
VGL
N/C
VOUT
VOUT
VOUT
VOUT
N/C
P.GND
amp-
N/C
ampOUT
N/C
Vref
VTS
GND
VB
N/C
VGH
N/C
VDD
VDD
VDD
VDD
N/C
TP97
TP98
TP99
TP100
TP107
TP106
TP105
TP104
TP103
TP102
TP101
TP140
MD1422N
R12 2.2K 0.5%
+24V
SLF12575T-330M3R2
L1
R16 0.3
R17 0.3
R18 1.6K 0.5%
D2
D1FM3
R19 1.6K 0.5%
C8 330uF/25V
C11 0.01uF
C12 0.1u / 50v
R20 1K 0.5%
R21 1K 0.5%
TP67

HDD PWB

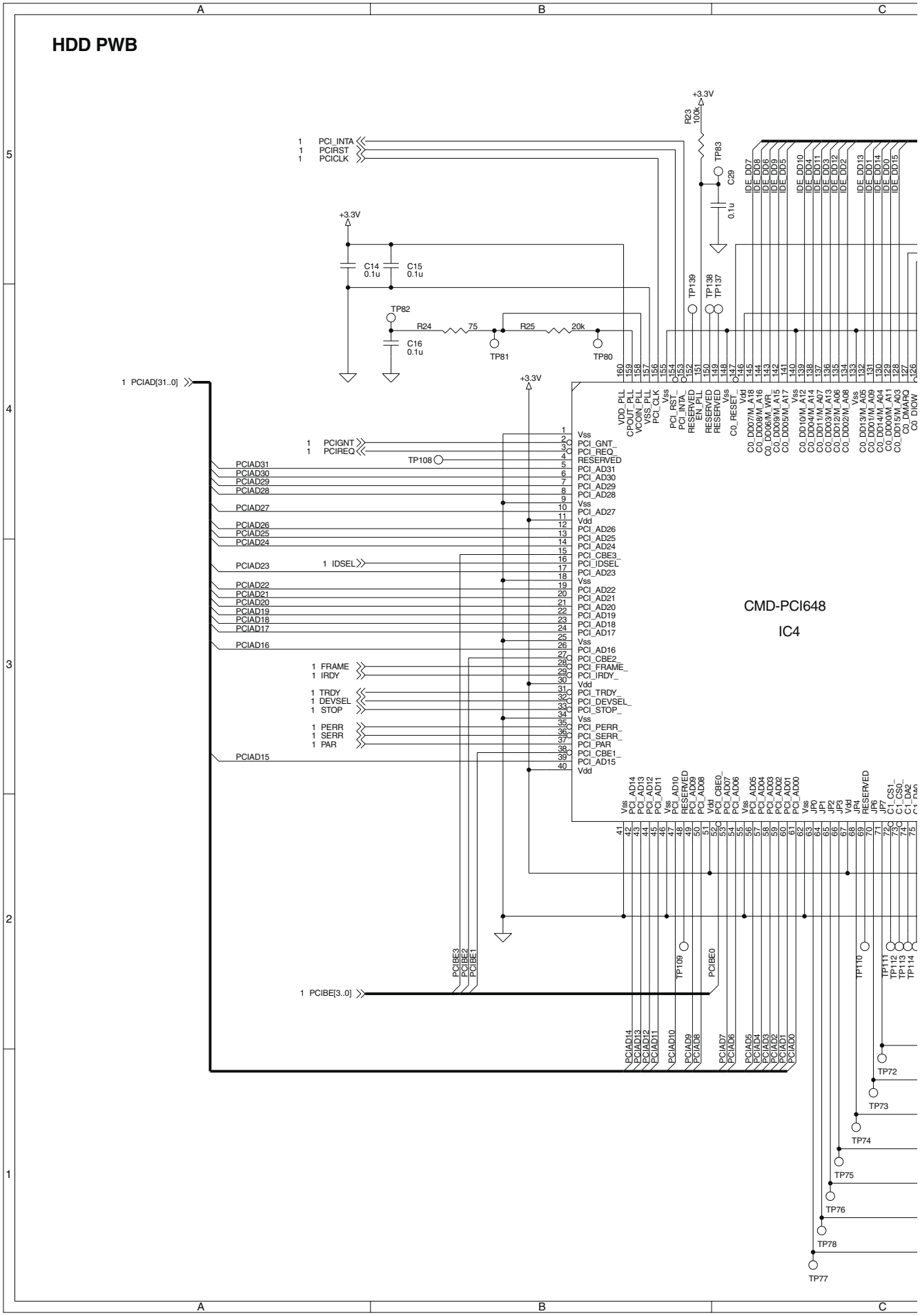
CMD-PCI648
IC4
+3.3V
R23 100k
C29 0.1u
C14 0.1u
C15 0.1u
C16 0.1u
R24 75
R25 20k
TP82
TP81
TP80
TP83
TP139
TP138
TP137
TP108
TP109
TP110
TP111
TP112
TP113
TP114
TP72
TP73
TP74
TP75
TP76
TP78
TP77
1 PCI_INTA
1 PCIRST
1 PCICLK
1 PCIAD[31..0]
1 PCIGNT
1 PCIREQ
1 IDSEL
1 FRAME
1 IRDY
1 TRDY
1 DEVSEL
1 STOP
1 PERR
1 SERR
1 PAR
1 PCIBE[3..0]
PCIAD31
PCIAD30
PCIAD29
PCIAD28
PCIAD27
PCIAD26
PCIAD25
PCIAD24
PCIAD23
PCIAD22
PCIAD21
PCIAD20
PCIAD19
PCIAD18
PCIAD17
PCIAD16
PCIAD15
PCIBE3
PCIBE2
PCIBE1
PCIBE0
PCI_GNT_
PCI_REQ_
RESERVED
PCI_AD31
PCI_AD30
PCI_AD29
PCI_AD28
PCI_AD27
PCI_AD26
PCI_AD25
PCI_AD24
PCI_CBE3_
PCI_IDSEL
PCI_AD23
PCI_AD22
PCI_AD21
PCI_AD20
PCI_AD19
PCI_AD18
PCI_AD17
PCI_AD16
PCI_CBE2_
PCI_FRAME_
PCI_IRDY_
PCI_TRDY_
PCI_DEVSEL_
PCI_STOP_
PCI_PERR_
PCI_SERR_
PCI_PAR
PCI_CBE1_
PCI_AD15
PCI_AD14
PCI_AD13
PCI_AD12
PCI_AD11
PCI_AD10
PCI_AD09
PCI_AD08
PCI_CBE0_
PCI_AD07
PCI_AD06
PCI_AD05
PCI_AD04
PCI_AD03
PCI_AD02
PCI_AD01
PCI_AD00
IDE_DD7
IDE_DD6
IDE_DD5
IDE_DD4
IDE_DD3
IDE_DD2
IDE_DD1
IDE_DD0
IDE_DD10
IDE_DD11
IDE_DD12
IDE_DD9
IDE_DD13
IDE_DD14
IDE_DD15

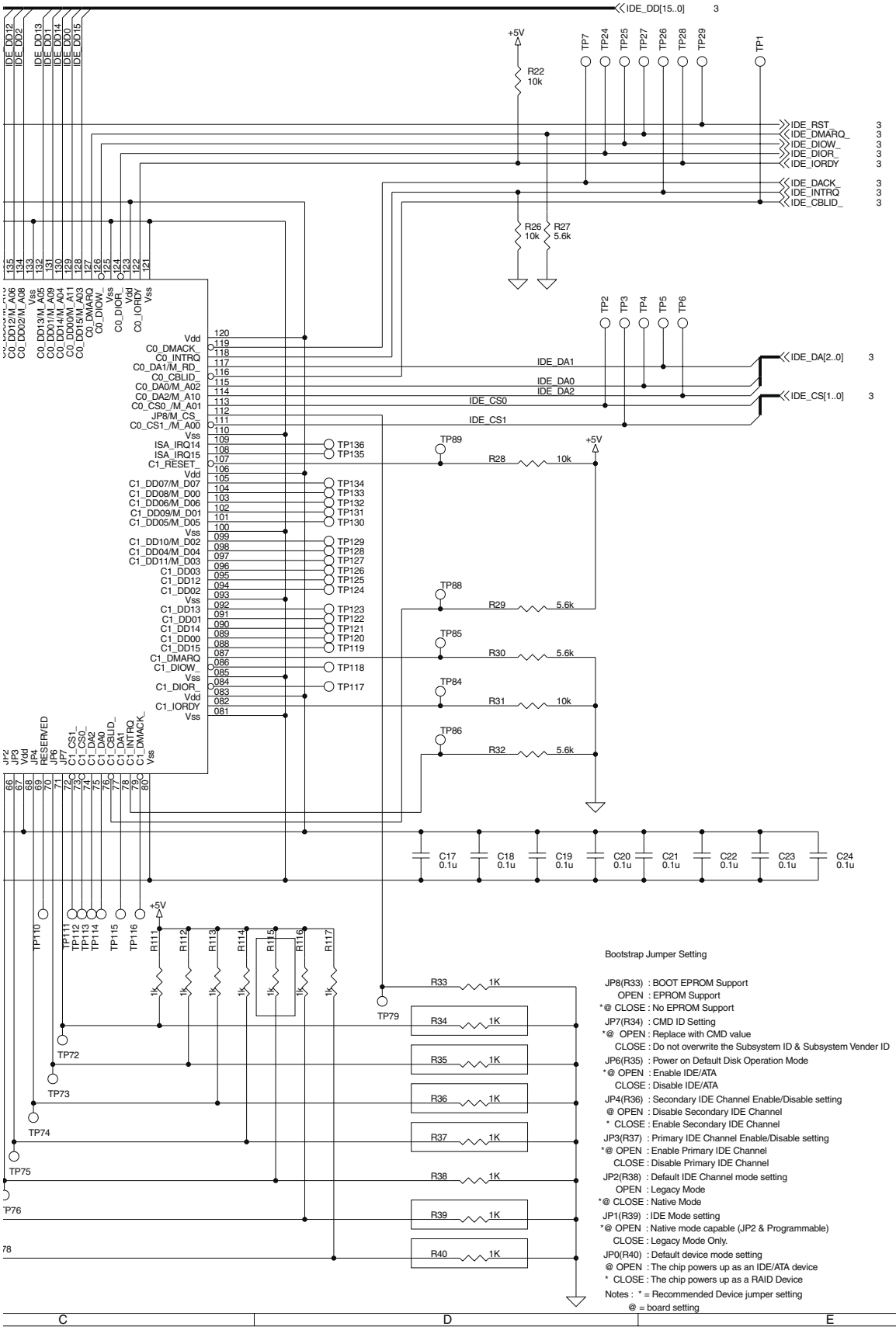

Bootstrap Jumper Setting

JP8(R33) : BOOT EPROM Support
OPEN : EPROM Support
*@ CLOSE : No EPROM Support
JP7(R34) : CMD ID Setting
*@ OPEN : Replace with CMD value
CLOSE : Do not overwrite the Subsystem ID & Subsystem Vender ID
JP6(R35) : Power on Default Disk Operation Mode
*@ OPEN : Enable IDE/ATA
CLOSE : Disable IDE/ATA
JP4(R36) : Secondary IDE Channel Enable/Disable setting
@ OPEN : Disable Secondary IDE Channel
* CLOSE : Enable Secondary IDE Channel
JP3(R37) : Primary IDE Channel Enable/Disable setting
*@ OPEN : Enable Primary IDE Channel
CLOSE : Disable Primary IDE Channel
JP2(R38) : Default IDE Channel mode setting
OPEN : Legacy Mode
*@ CLOSE : Native Mode
JP1(R39) : IDE Mode setting
*@ OPEN : Native mode capable (JP2 & Programmable)
CLOSE : Legacy Mode Only.
JP0(R40) : Default device mode setting
@ OPEN : The chip powers up as an IDE/ATA device
* CLOSE : The chip powers up as a RAID Device
Notes : * = Recommended Device jumper setting
@ = board setting

HDD PWB

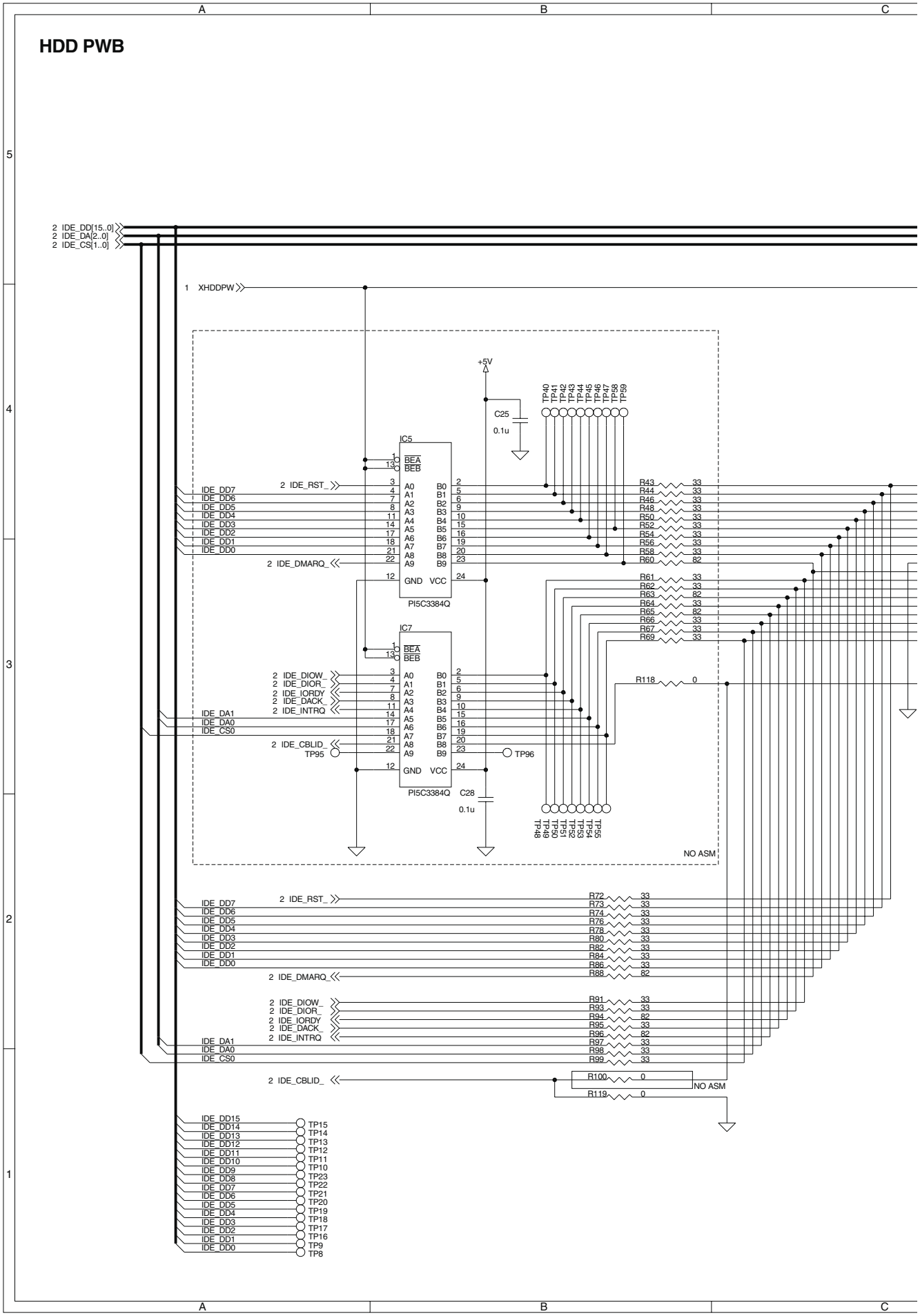
2 IDE_DD[15..0]
2 IDE_DA[2..0]
2 IDE_CS[1..0]
1 XHDDPW
+5V
C25
0.1u
IC5
IC7
PI5C3384Q
2 IDE_RST_
2 IDE_DMARQ_
2 IDE_DIOW_
2 IDE_DIOR_
2 IDE_IORDY
2 IDE_DACK_
2 IDE_INTRQ
2 IDE_CBLID_
IDE_DD7
IDE_DD6
IDE_DD5
IDE_DD4
IDE_DD3
IDE_DD2
IDE_DD1
IDE_DD0
IDE_DA1
IDE_DA0
IDE_CS0
TP95
TP96
C28
0.1u
TP40 TP41 TP42 TP43 TP44 TP45 TP46 TP47 TP58 TP59
TP48 TP49 TP50 TP51 TP52 TP53 TP54 TP55
R43 R44 R46 R48 R50 R52 R54 R56 R58 R60
R61 R62 R63 R64 R65 R66 R67 R69
R118
R72 R73 R74 R76 R78 R80 R82 R84 R86 R88
R91 R93 R94 R95 R96 R97 R98 R99
R100
R119
NO ASM
TP15 TP14 TP13 TP12 TP11 TP10 TP23 TP22 TP21 TP20 TP19 TP18 TP17 TP16 TP9 TP8

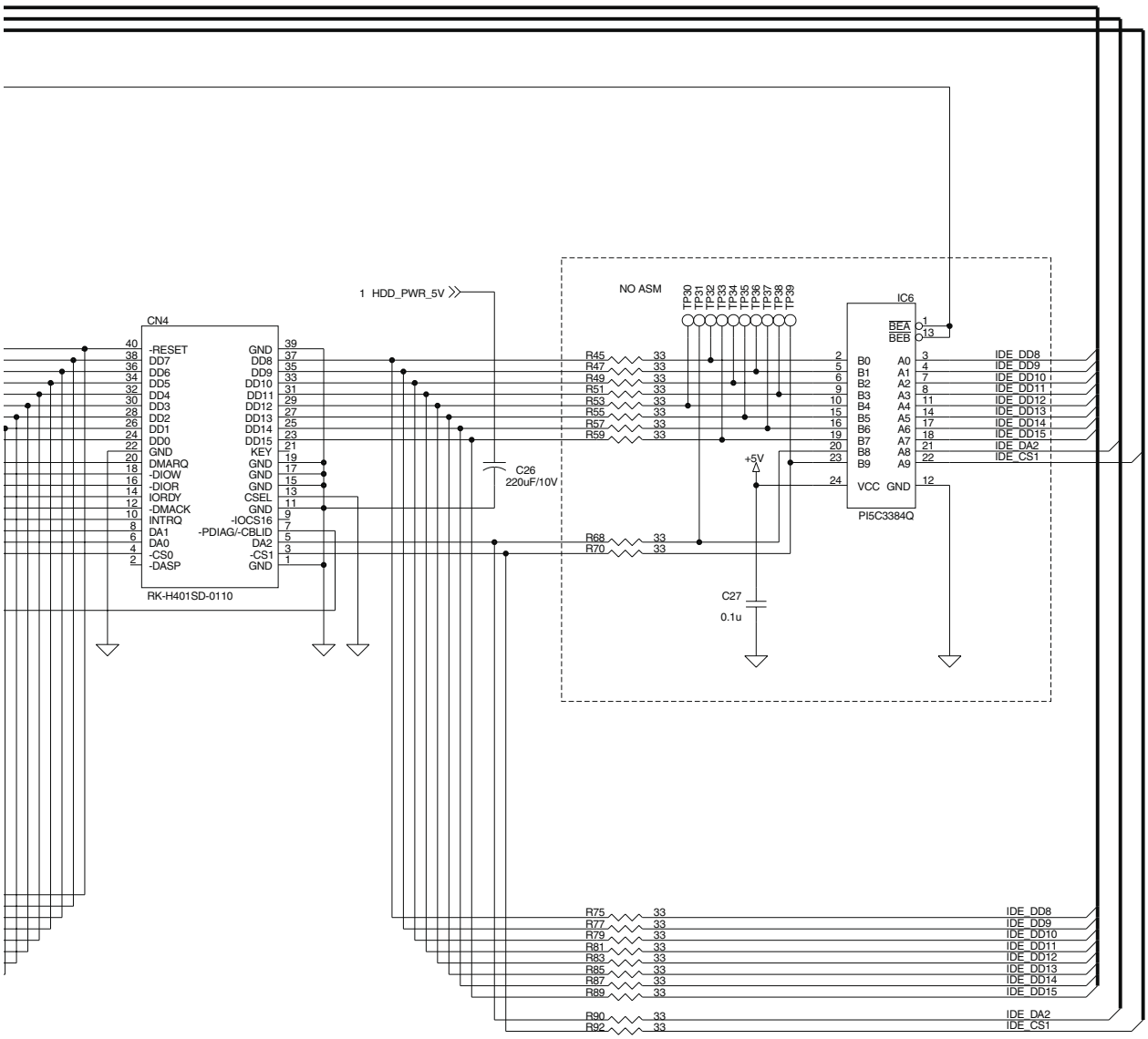
CN4
RK-H401SD-0110
-RESET
DD7
DD6
DD5
DD4
DD3
DD2
DD1
DD0
GND
DMARQ
-DIOW
-DIOR
IORDY
-DMACK
INTRQ
DA1
DA0
-CS0
-DASP
DD8
DD9
DD10
DD11
DD12
DD13
DD14
DD15
KEY
CSEL
-IOCS16
-PDIAG/-CBLID
DA2
-CS1
1 HDD_PWR_5V
C26
220uF/10V
NO ASM
TP30
TP31
TP32
TP33
TP34
TP35
TP36
TP37
TP38
TP39
IC6
PI5C3384Q
BEA
BEB
B0
B1
B2
B3
B4
B5
B6
B7
B8
B9
A0
A1
A2
A3
A4
A5
A6
A7
A8
A9
VCC
GND
+5V
C27
0.1u
R45
R47
R49
R51
R53
R55
R57
R59
R68
R70
R75
R77
R79
R81
R83
R85
R87
R89
R90
R92
33
IDE_DD8
IDE_DD9
IDE_DD10
IDE_DD11
IDE_DD12
IDE_DD13
IDE_DD14
IDE_DD15
IDE_DA2
IDE_CS1

HDD PWB

PARTS LAYOUT / 部品配置図

[PARTS SURFACE / 部品面**]**

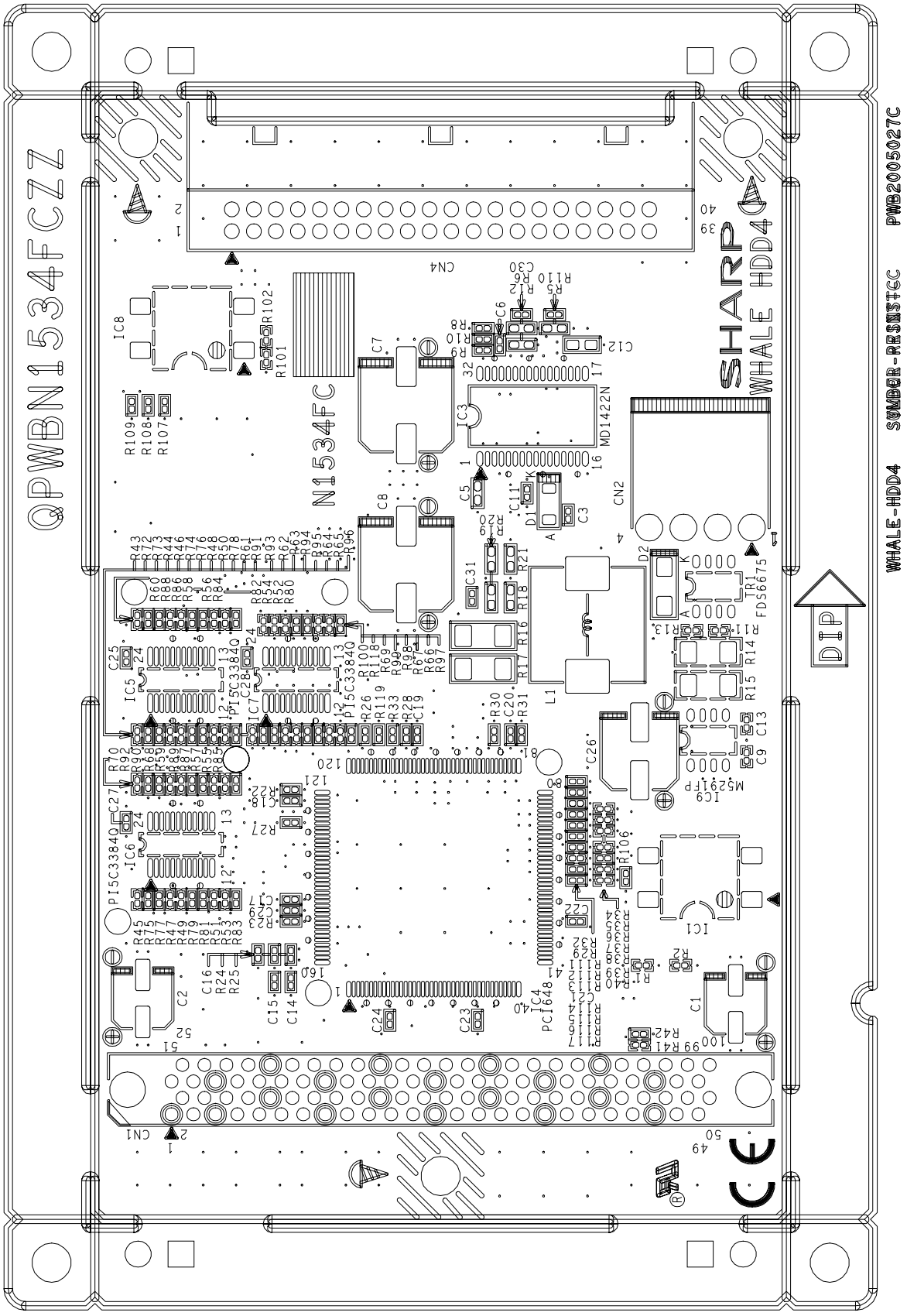

PRINT CONTROL PWB (INFORMATION)

1/24

PRINT CONTROLLER BOARD (ALPHA-5)

PAGE01 : INFORMATION
PAGE02 : SYSTEM CONFIGURATION
PAGE03 : POWER
PAGE04 : XPC755-1
PAGE05 : XPC755-2 / 60X BUS DUMP RES.
PAGE06 : MPC107-1(PCI/60X)
PAGE07 : MPC107-2(MEMORY INTERFACE / PLL) / JTAG
PAGE08 : CAP(XPC755 / MPC107)
PAGE09 : BOOT ROM / BUFFER
PAGE10 : ON BOARD SDRAM
PAGE11 : SDRAM DIMM SOCKET #0 / #1
PAGE12 : SDRAM CLKDRV / MEMORY DUMP RES.
PAGE13 : PCI SLOT #1(NIC),#2(HDD)/SCNIF SLOT
PAGE14 : TEST PIN
PAGE15 : ENGINE INTERFACE
PAGE16 : D3032
PAGE17 : RTC / BATTERY / EEPROM
PAGE18 : IEEE1284 I/F
PAGE19 : RESET/COP CN
PAGE20 : D8501A IO BUS BUFFER
PAGE21 : USB INTERFACE (OKI)
PAGE22 : FLASH SDIMM
PAGE23 : D8501A-1
PAGE24 : D8501A-2

Interrupt Connection

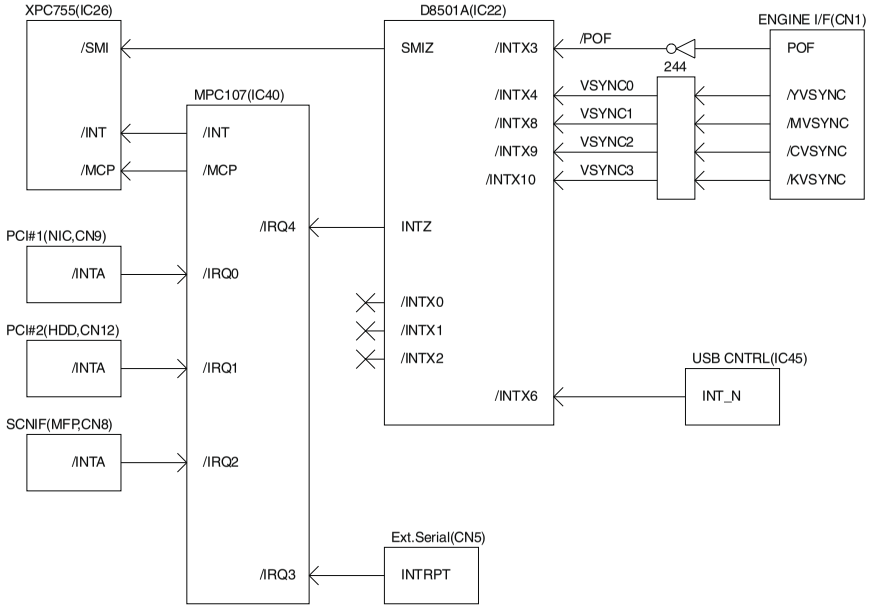

PRINT CONTROL PWB (SYSTEM CONFIGURATION)

[MP

[D8501A RESET OPTIONS]

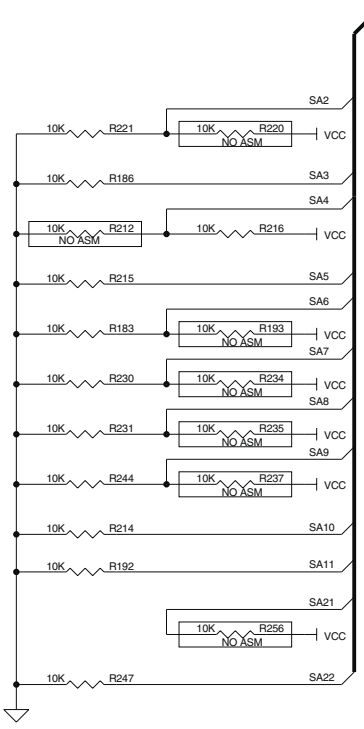

[D8501]

SA2 : 0 disable DBGLBZ
1 Ensable DBGLBZ

SA3 : 0 PLL counter count
1 Skip PLL counter

SA4 : 0 TSZ no delay
1 TSZ with 1T delay

SA5 : 0 W/O Ext. PCI Bridge
1 W/ Ext. PCI Bridge

SA9/8/7/6 : (PLL SEL)

SA10-11 : 0 disable MUX_CLK's H/W config.
1 Ensable MUX_CLK's H/W config.

SA21/SA22 : Test Code

[D8501A]

SA2 : 0 disable DBGLBZ
1 Ensable DBGLBZ

SA3 : 0 PLL counter count
1 Skip PLL counter

SA4 : 0 Use OSC as the
internal main clock
1 Use DLL as the
internal main clock

SA5 : 0 Vdo clock does not use DPBCLK
1 Vdo clock use DPBCLK

SA21/SA22 : Test Code

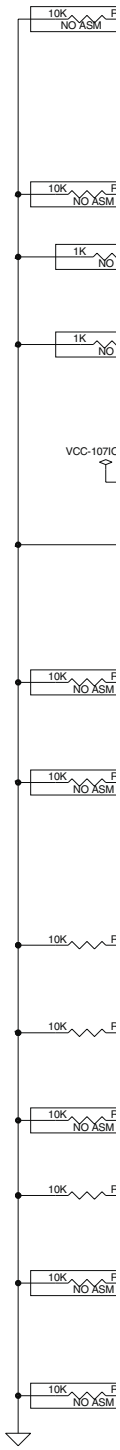

[MPC107 RESET CONFIGURATION] (UM-Section 2.4)

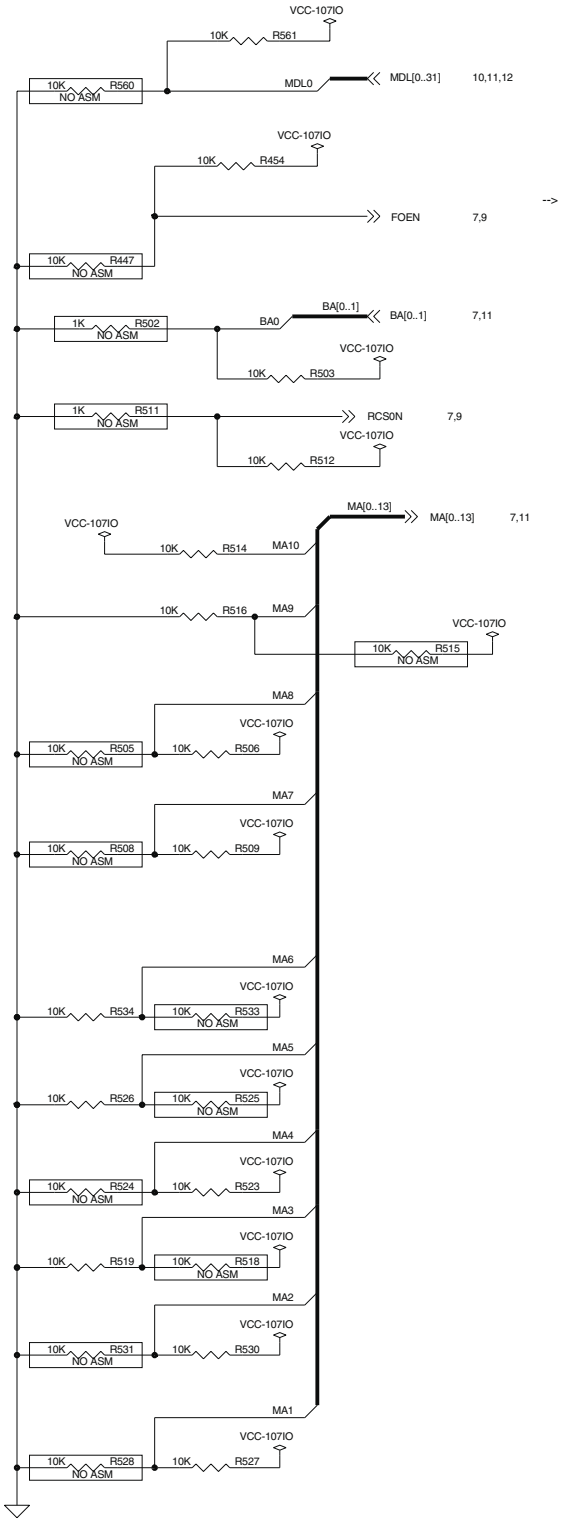

ROM Data Width [MDL(0), FOE]

For ROM/FLASH chip select #0/1

RCS0 (bit)	RCS1 (bit)	MDL0	FOE	MCCR4-bit17
64	64	1	0	0
64	8	1	0	1
8	64	1	1	0
8	8	1	1	1

Initial Address Map [SDBA0]

0 : The MPC107 is configured for address map A
(not supported when operating in PCI agent mode)
1 : The MPC107 is configured for address map B

Boot Memory Location [/RCS0]

0 : Indicates that boot ROM is located on the PCI bus
1 : Indicates that boot ROM is located on local processor/memory data bus

MPC107 Host Mode [SDMA10]

0 MPC107 is a PCI agent device
1 MPC107 is a PCI master (host) device

PCI Arbiter [SDMA9]

0 : PCI arbiter enabled
1 : PCI arbiter disabled

Driver capability for MDH[0:31], MDL[0:31], PAR[0:7], and RCS1 [SDMA8]

1 : 20-ohm data bus drive capability; when this is selected,
only 8-ohm or 13.3-ohm drive capability is allowed for SDMA7
0 : 40-ohm data bus drive capability; when this is selected,
only 20-ohm or 40-ohm drive capability is allowed for SDMA7

Driver capability for address signals (RAS/CS[0:7], CAS/DQM[0:7], WE, FOE, RCS0,
RCS2, RCS3, SDBA0, SDRAS, SDCAS, CKE, AS, SDMA[13:0]) [SDMA7]
[SDMA8, SDMA7]
11 : 8-ohm drive capability
10 : 13.3-ohm drive capability
01 : 20-ohm drive capability
00 : 40-ohm drive capability

Driver capability for PCI and EPIC controller output signals [SDMA6]

0 : High drive capability on PCI signals (25 ohm)
1 : Medium drive capability on PCI signals (50 ohm)

Driver capability for SDA, SCL, CKO, QACK, and MCP as well as 60x output signals [SDMA5]

0 : High drive capability on CPU signals (20 ohm)
1 : Medium drive capability on CPU signals (40 ohm)

PCI output hold delay value (in nanoseconds) relative to PCI_SYNC_IN [SDMA4, SDMA3]

[SDMA4, SDMA3, '0'] (UM-Section 4.3.2)
000 : Recommended for 66MHz PCI bus
100 : Recommended for 33MHz PCI bus

Clock flip disable [SDMA2]

(Section 2.3.3)
0 : Clock flip enabled
1 : No clock flip

DLL lock range extend [SDMA1]

0 : DLL lock range extended
1 : Standard DLL range

PRINT CONTROL PWB (POWER)

VCC-CPUIO = 3.3V for CPU I/O (max. 1A)

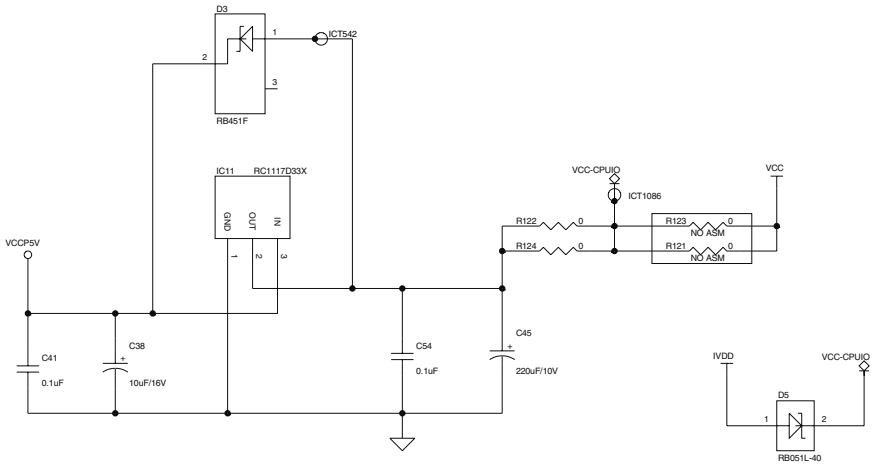

IVDD = 2.0V for CPU core (max. 3A)

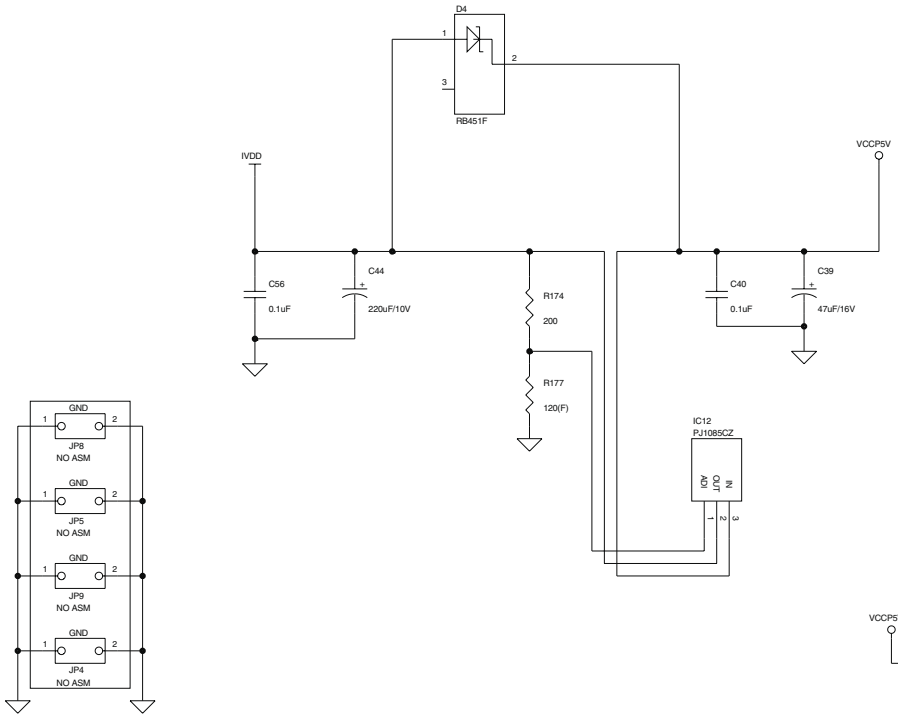

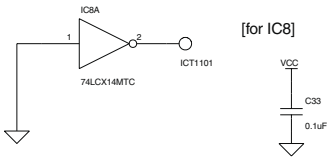

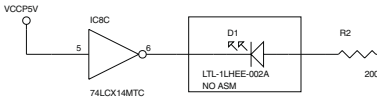

VCCP5V = +5V_PRT from Engine I/F

VCC = +3.3V from Engine I/F

VCC-107IO = 3.3V for 107 I/O (max. 1A)

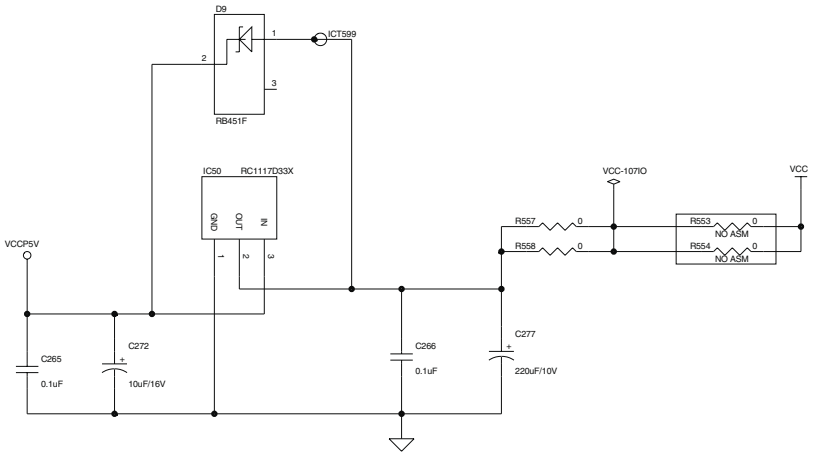

107-VCORE = 2.5V for 107 core (max. 1A)

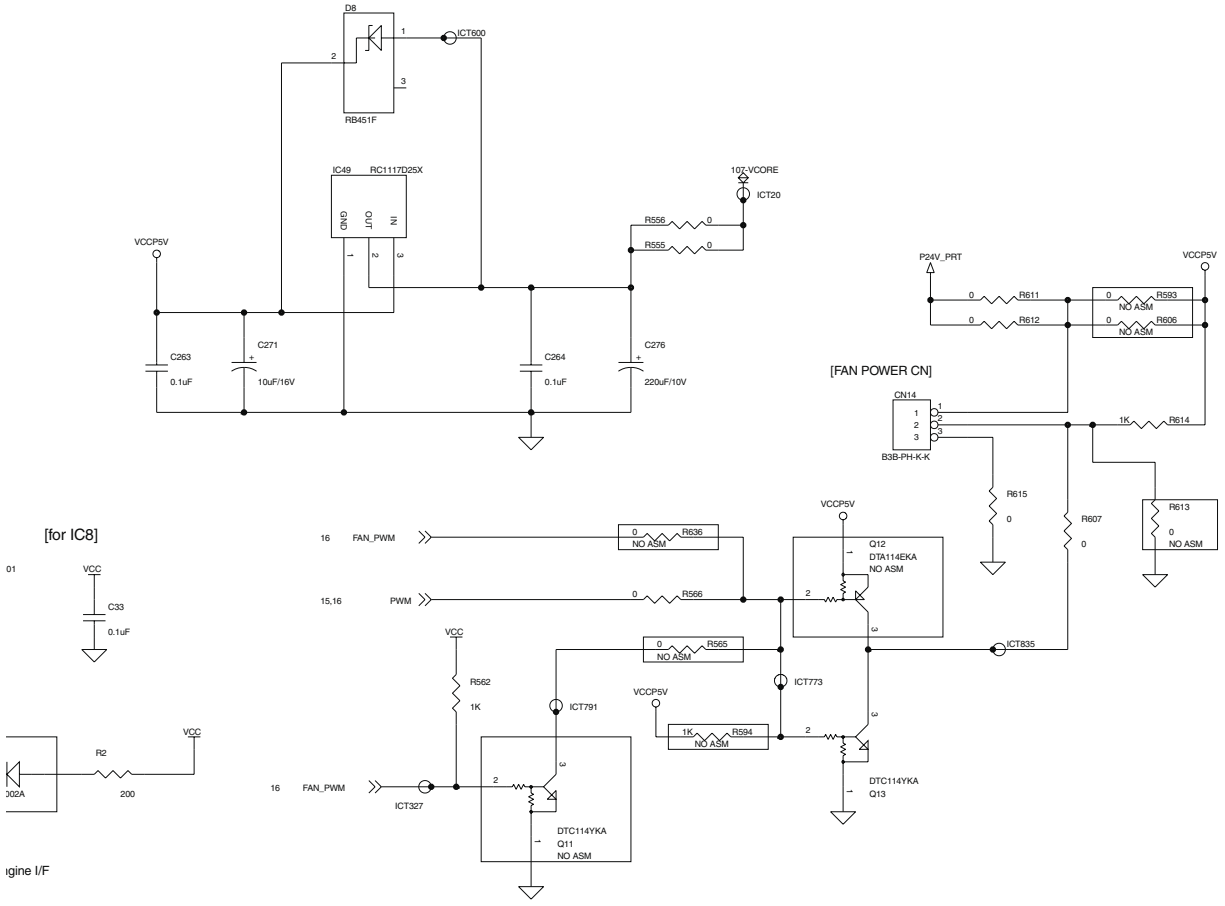

ıgine I/F

PRINT CONTROL PWB (XPC755-1)

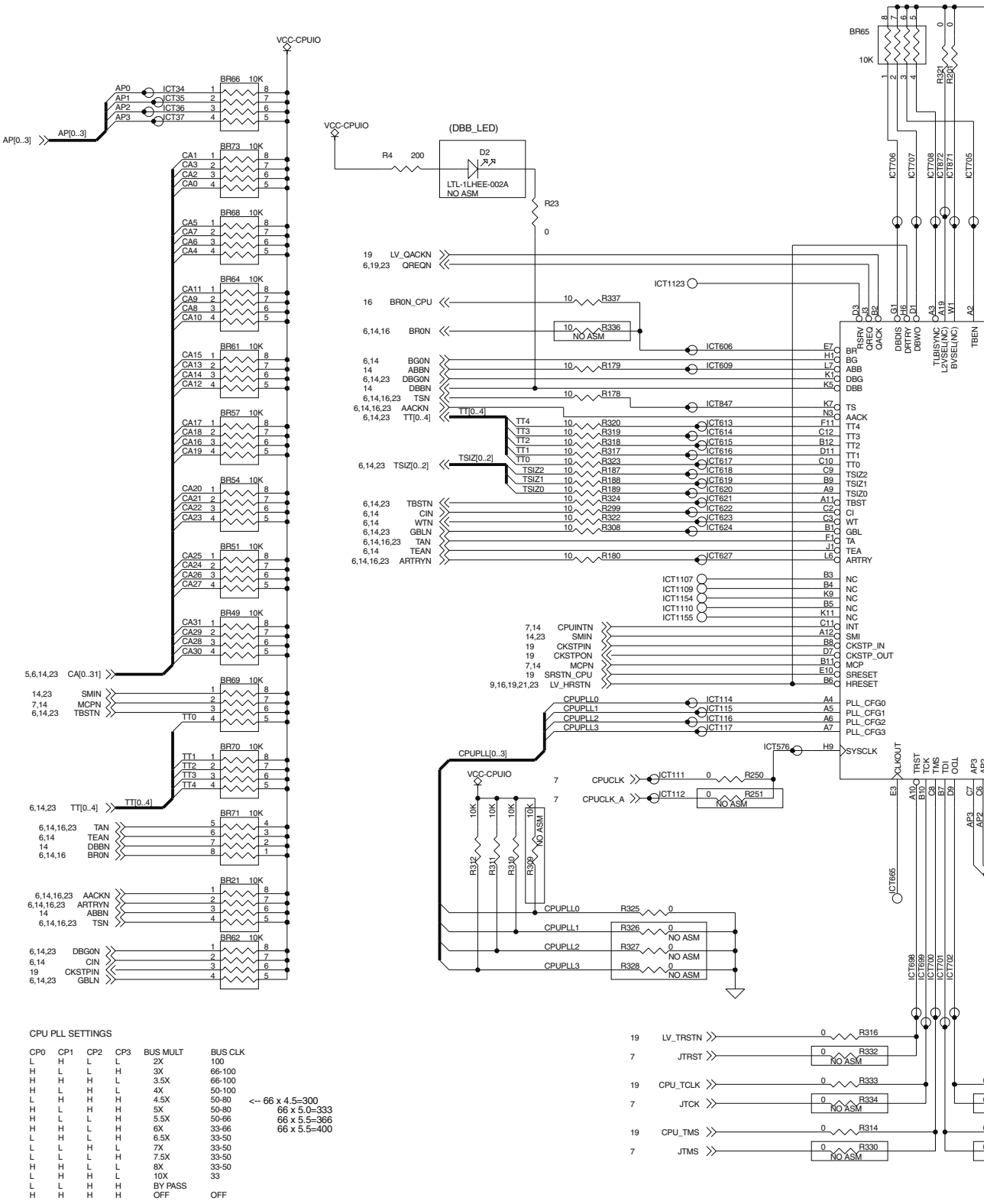

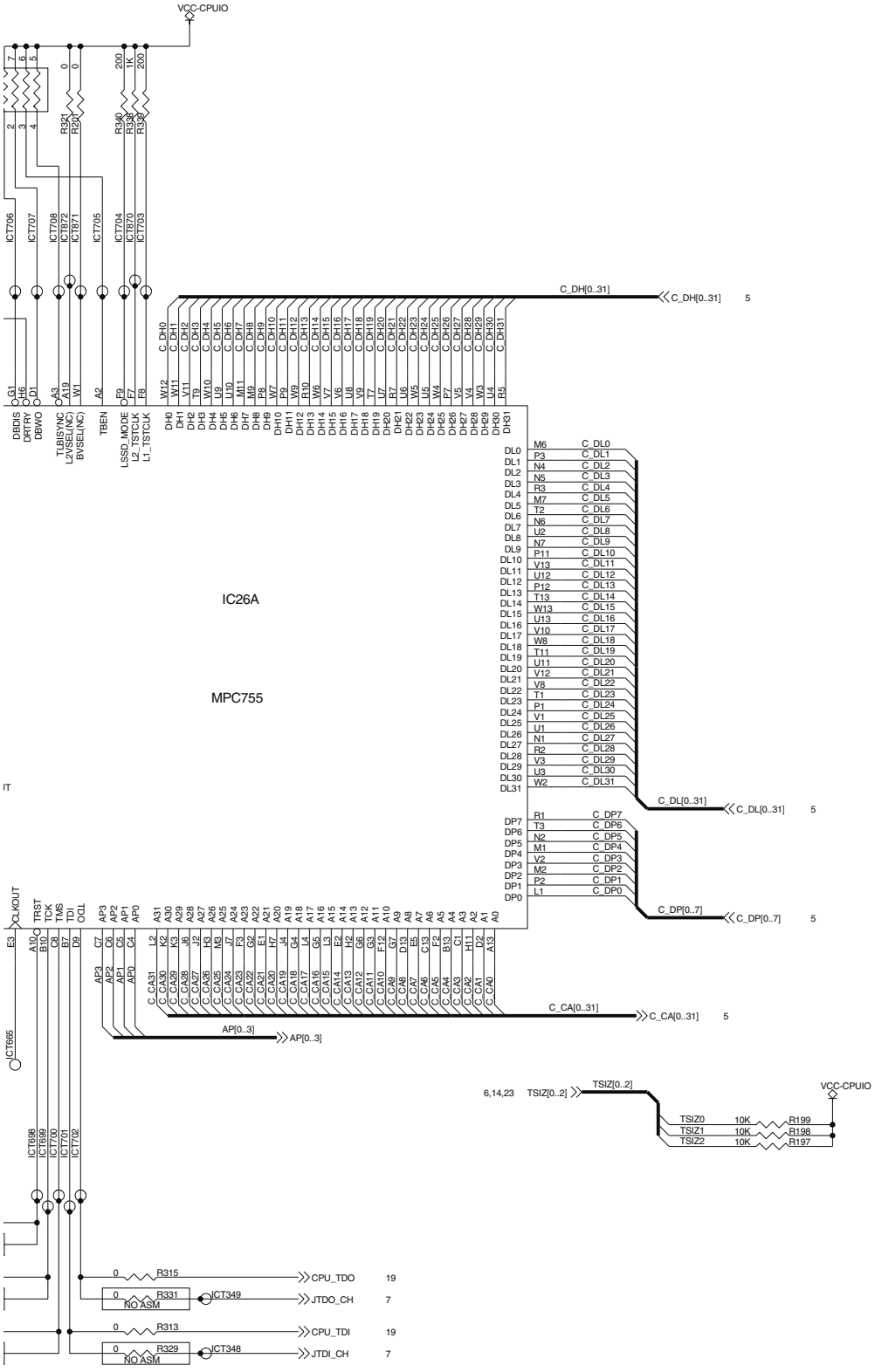
VCC-CPUIO
IC26A
MPC755
C_DH[0..31]
C_DL[0..31]
C_DP[0..7]
C_CA[0..31]
AP[0..3]
TSIZ[0..2]
CPU_TDO
JTDO_CH
CPU_TDI
JTDI_CH
NO ASM

PRINT CONTROL PWB (XPC755-2 / 60X BUS DUMP RES.)

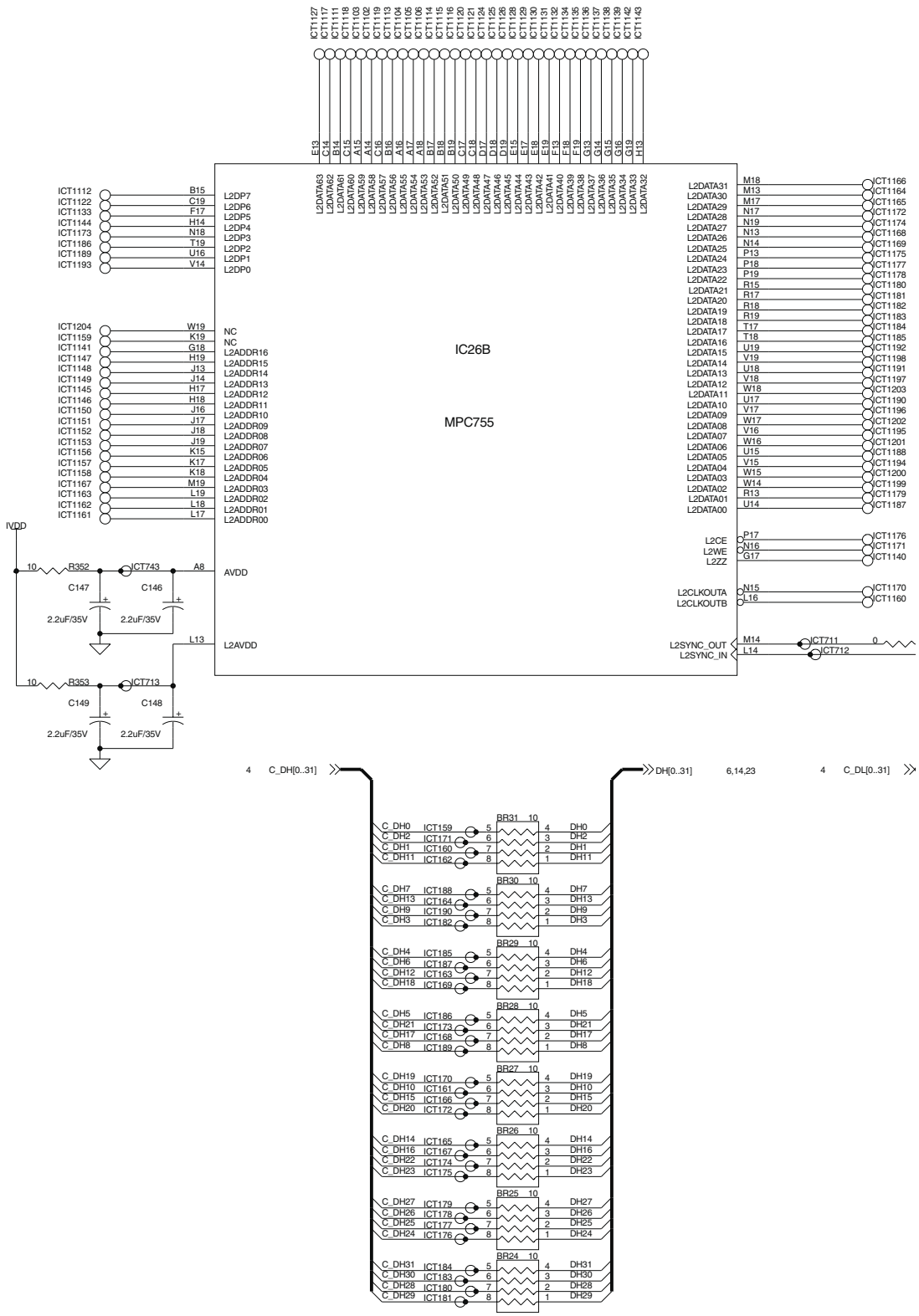

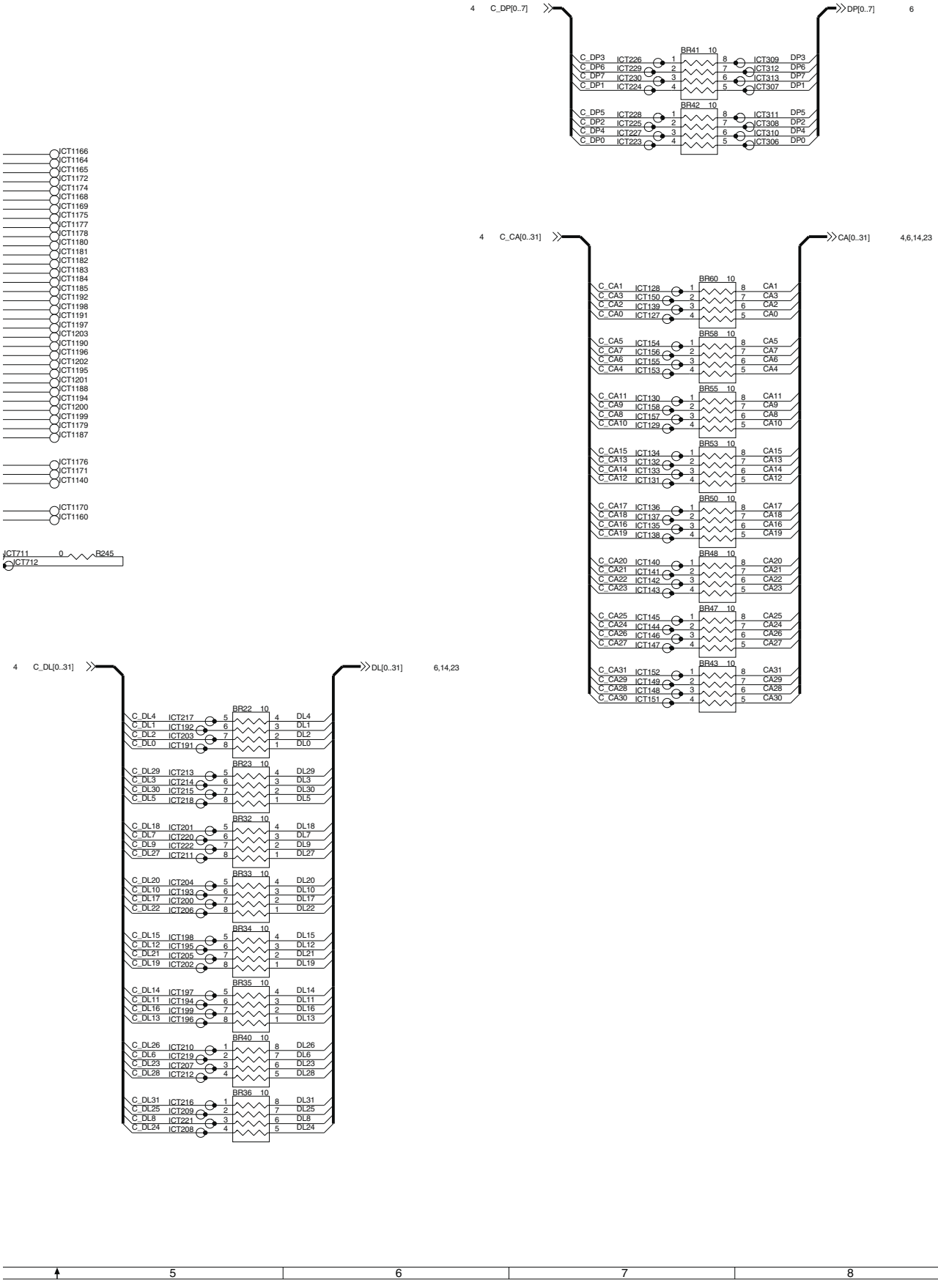
4 C_DP[0..7]
DP[0..7] 6
BR41 10
C_DP3 ICT226 1 8 ICT309 DP3
C_DP6 ICT229 2 7 ICT312 DP6
C_DP7 ICT230 3 6 ICT313 DP7
C_DP1 ICT224 4 5 ICT307 DP1
BR42 10
C_DP5 ICT228 1 8 ICT311 DP5
C_DP2 ICT225 2 7 ICT308 DP2
C_DP4 ICT227 3 6 ICT310 DP4
C_DP0 ICT223 4 5 ICT306 DP0
4 C_CA[0..31]
CA[0..31] 4,6,14,23
BR60 10
C_CA1 ICT128 1 8 CA1
C_CA3 ICT150 2 7 CA3
C_CA2 ICT139 3 6 CA2
C_CA0 ICT127 4 5 CA0
BR58 10
C_CA5 ICT154 1 8 CA5
C_CA7 ICT156 2 7 CA7
C_CA6 ICT155 3 6 CA6
C_CA4 ICT153 4 5 CA4
BR55 10
C_CA11 ICT130 1 8 CA11
C_CA9 ICT158 2 7 CA9
C_CA8 ICT157 3 6 CA8
C_CA10 ICT129 4 5 CA10
BR53 10
C_CA15 ICT134 1 8 CA15
C_CA13 ICT132 2 7 CA13
C_CA14 ICT133 3 6 CA14
C_CA12 ICT131 4 5 CA12
BR50 10
C_CA17 ICT136 1 8 CA17
C_CA18 ICT137 2 7 CA18
C_CA16 ICT135 3 6 CA16
C_CA19 ICT138 4 5 CA19
BR48 10
C_CA20 ICT140 1 8 CA20
C_CA21 ICT141 2 7 CA21
C_CA22 ICT142 3 6 CA22
C_CA23 ICT143 4 5 CA23
BR47 10
C_CA25 ICT145 1 8 CA25
C_CA24 ICT144 2 7 CA24
C_CA26 ICT146 3 6 CA26
C_CA27 ICT147 4 5 CA27
BR43 10
C_CA31 ICT152 1 8 CA31
C_CA29 ICT149 2 7 CA29
C_CA28 ICT148 3 6 CA28
C_CA30 ICT151 4 5 CA30
ICT1166
ICT1164
ICT1165
ICT1172
ICT1174
ICT1168
ICT1169
ICT1175
ICT1177
ICT1178
ICT1180
ICT1181
ICT1182
ICT1183
ICT1184
ICT1185
ICT1192
ICT1198
ICT1191
ICT1197
ICT1203
ICT1190
ICT1196
ICT1202
ICT1195
ICT1201
ICT1188
ICT1194
ICT1200
ICT1199
ICT1179
ICT1187
ICT1176
ICT1171
ICT1140
ICT1170
ICT1160
ICT711 0 R245
ICT712
4 C_DL[0..31]
DL[0..31] 6,14,23
BR22 10
C_DL4 ICT217 5 4 DL4
C_DL1 ICT192 6 3 DL1
C_DL2 ICT203 7 2 DL2
C_DL0 ICT191 8 1 DL0
BR23 10
C_DL29 ICT213 5 4 DL29
C_DL3 ICT214 6 3 DL3
C_DL30 ICT215 7 2 DL30
C_DL5 ICT218 8 1 DL5
BR32 10
C_DL18 ICT201 5 4 DL18
C_DL7 ICT220 6 3 DL7
C_DL9 ICT222 7 2 DL9
C_DL27 ICT211 8 1 DL27
BR33 10
C_DL20 ICT204 5 4 DL20
C_DL10 ICT193 6 3 DL10
C_DL17 ICT200 7 2 DL17
C_DL22 ICT206 8 1 DL22
BR34 10
C_DL15 ICT198 5 4 DL15
C_DL12 ICT195 6 3 DL12
C_DL21 ICT205 7 2 DL21
C_DL19 ICT202 8 1 DL19
BR35 10
C_DL14 ICT197 5 4 DL14
C_DL11 ICT194 6 3 DL11
C_DL16 ICT199 7 2 DL16
C_DL13 ICT196 8 1 DL13
BR40 10
C_DL26 ICT210 1 8 DL26
C_DL6 ICT219 2 7 DL6
C_DL23 ICT207 3 6 DL23
C_DL28 ICT212 4 5 DL28
BR36 10
C_DL31 ICT216 1 8 DL31
C_DL25 ICT209 2 7 DL25
C_DL8 ICT221 3 6 DL8
C_DL24 ICT208 4 5 DL24

PRINT CONTROL PWB (MPC107-1(PCI/60X))

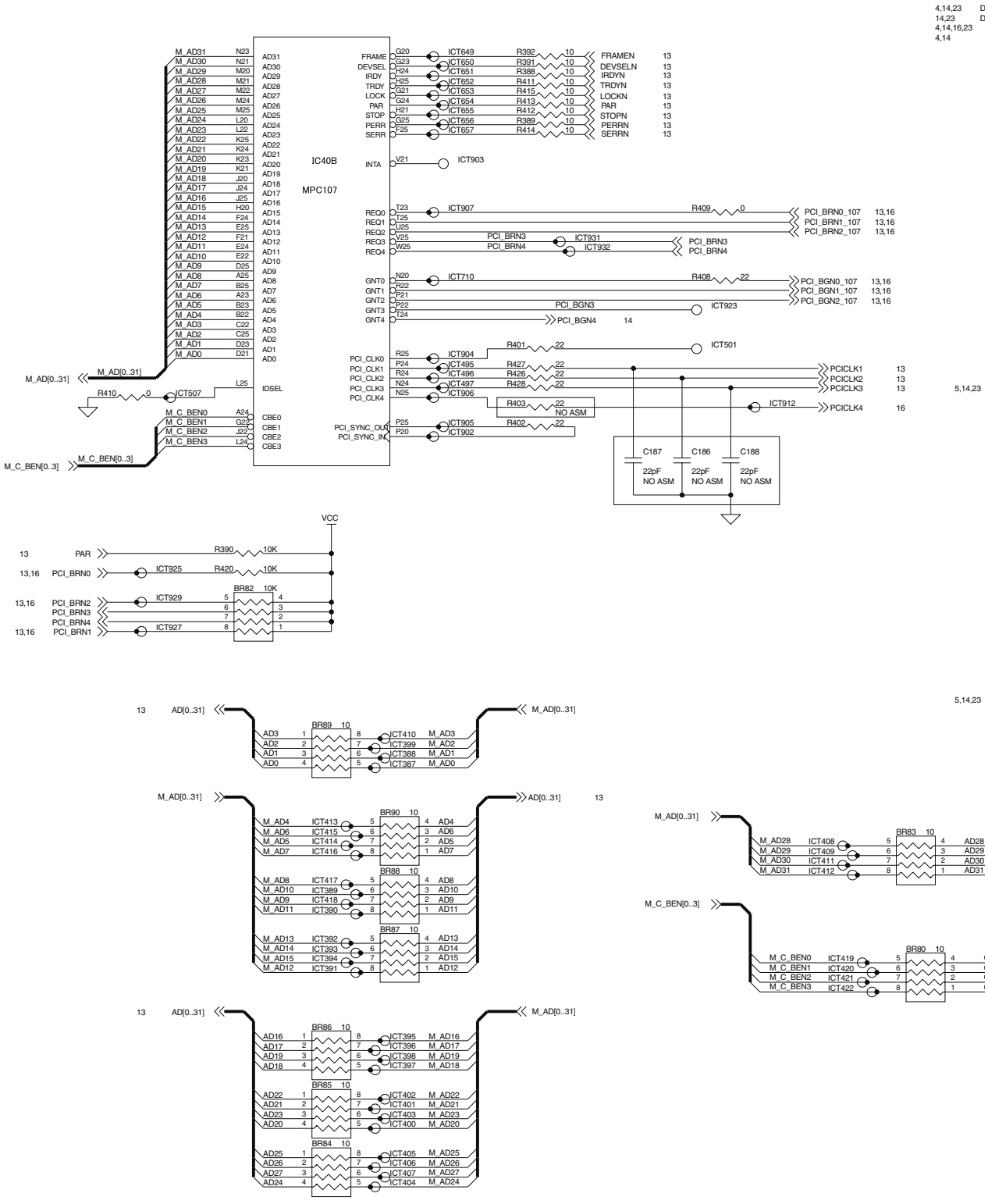

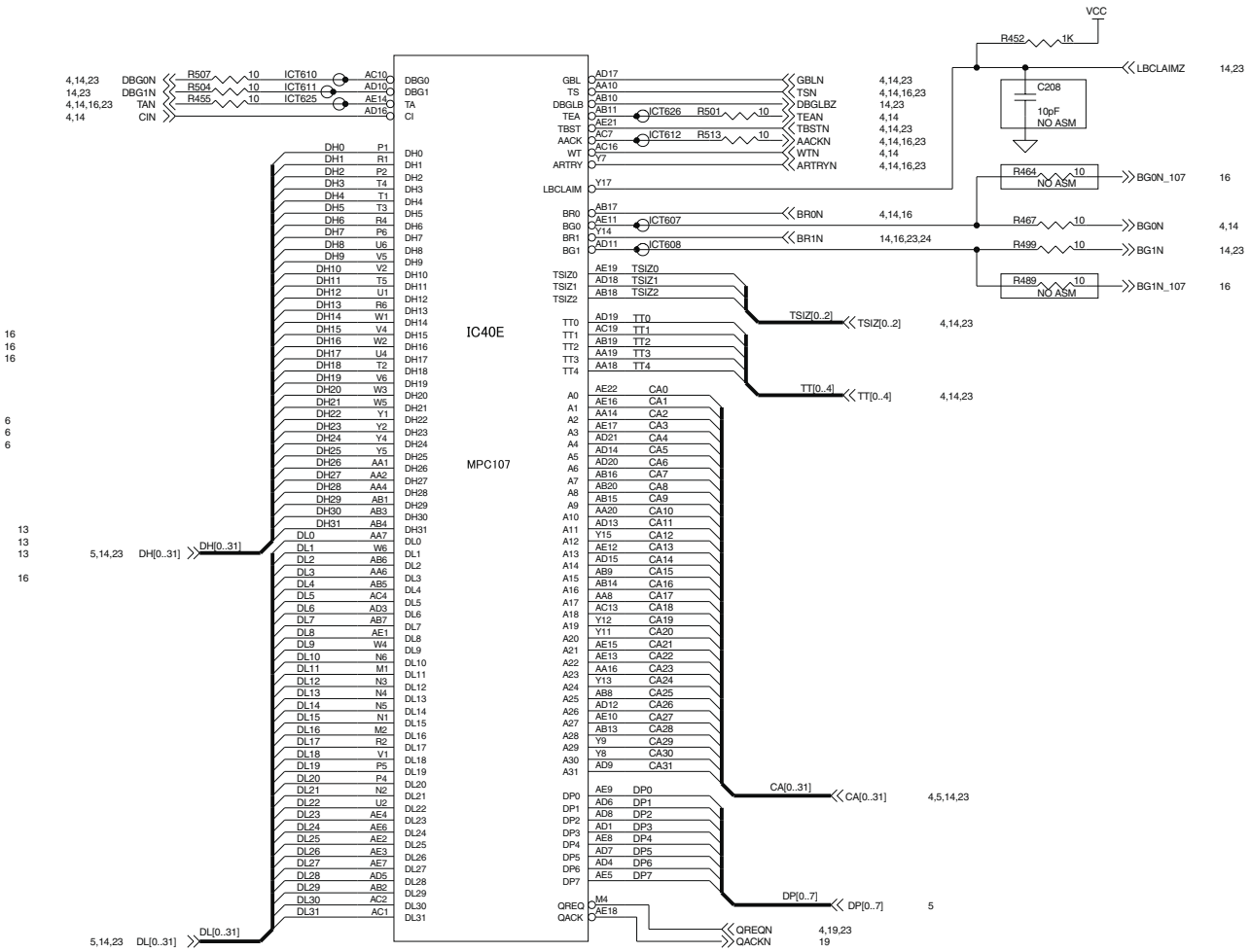
IC40E
MPC107
VCC
R452 1K
LBCLAIMZ 14,23
C208 10pF NO ASM
R464 10 NO ASM BG0N_107 16
R467 10 BG0N 4,14
R499 10 BG1N 14,23
R489 10 NO ASM BG1N_107 16
4,14,23 DBG0N R507 10 ICT610 AC10
14,23 DBG1N R504 10 ICT611 AD10
4,14,16,23 TAN R455 10 ICT625 AE14
4,14 CIN AD16
GBL AD17 GBLN 4,14,23
TS AA10 TSN 4,14,16,23
DBGLB AB10 DBGLBZ 14,23
TEA AB11 ICT626 R501 10 TEAN 4,14
TBST AE21 TBSTN 4,14,23
AACK AC7 ICT612 R513 10 AACKN 4,14,16,23
WT AC16 WTN 4,14
ARTRY Y7 ARTRYN 4,14,16,23
LBCLAIM Y17
BR0 AB17 BR0N 4,14,16
BG0 AE11 ICT607 Y14
BR1 AD11 ICT608 BR1N 14,16,23,24
BG1
TSIZ0 AE19 TSIZ0
TSIZ1 AD18 TSIZ1
TSIZ2 AB18 TSIZ2
TSIZ[0..2] TSIZ[0..2] 4,14,23
TT0 AD19 TT0
TT1 AC19 TT1
TT2 AB19 TT2
TT3 AA19 TT3
TT4 AA18 TT4
TT[0..4] TT[0..4] 4,14,23
A0 AE22 CA0
A1 AE16 CA1
A2 AA14 CA2
A3 AE17 CA3
A4 AD21 CA4
A5 AD14 CA5
A6 AD20 CA6
A7 AB16 CA7
A8 AB20 CA8
A9 AB15 CA9
A10 AA20 CA10
A11 AD13 CA11
A12 Y15 CA12
A13 AE12 CA13
A14 AD15 CA14
A15 AB9 CA15
A16 AB14 CA16
A17 AA8 CA17
A18 AC13 CA18
A19 Y12 CA19
A20 Y11 CA20
A21 AE15 CA21
A22 AE13 CA22
A23 AA16 CA23
A24 Y13 CA24
A25 AB8 CA25
A26 AD12 CA26
A27 AE10 CA27
A28 AB13 CA28
A29 Y9 CA29
A30 Y8 CA30
A31 AD9 CA31
CA[0..31] CA[0..31] 4,5,14,23
DP0 AE9 DP0
DP1 AD6 DP1
DP2 AD8 DP2
DP3 AD1 DP3
DP4 AE8 DP4
DP5 AD7 DP5
DP6 AD4 DP6
DP7 AE5 DP7
DP[0..7] DP[0..7] 5
QREQ M4
QACK AE18
QREQN 4,19,23
QACKN 19
DH[0..31] 5,14,23 DH[0..31]
DL[0..31] 5,14,23 DL[0..31]
DH0 P1
DH1 R1
DH2 P2
DH3 T4
DH4 T1
DH5 T3
DH6 R4
DH7 P6
DH8 U6
DH9 V5
DH10 V2
DH11 T5
DH12 U1
DH13 R6
DH14 W1
DH15 V4
DH16 W2
DH17 U4
DH18 T2
DH19 V6
DH20 W3
DH21 W5
DH22 Y1
DH23 Y2
DH24 Y4
DH25 Y5
DH26 AA1
DH27 AA2
DH28 AA4
DH29 AB1
DH30 AB3
DH31 AB4
DL0 AA7
DL1 W6
DL2 AB6
DL3 AA6
DL4 AB5
DL5 AC4
DL6 AD3
DL7 AB7
DL8 AE1
DL9 W4
DL10 N6
DL11 M1
DL12 N3
DL13 N4
DL14 N5
DL15 N1
DL16 M2
DL17 R2
DL18 V1
DL19 P5
DL20 P4
DL21 N2
DL22 U2
DL23 AE4
DL24 AE6
DL25 AE2
DL26 AE3
DL27 AE7
DL28 AD5
DL29 AB2
DL30 AC2
DL31 AC1
AD[0..31] 13
BR83 10
AD28
AD29
AD30
AD31
C_BEN[0..3] 13
BR80 10
C_BEN0
C_BEN1
C_BEN2
C_BEN3

PRINT CONTROL PWB (MPC107-2(MEMORY INTERFACE / PLL) / JTAG)

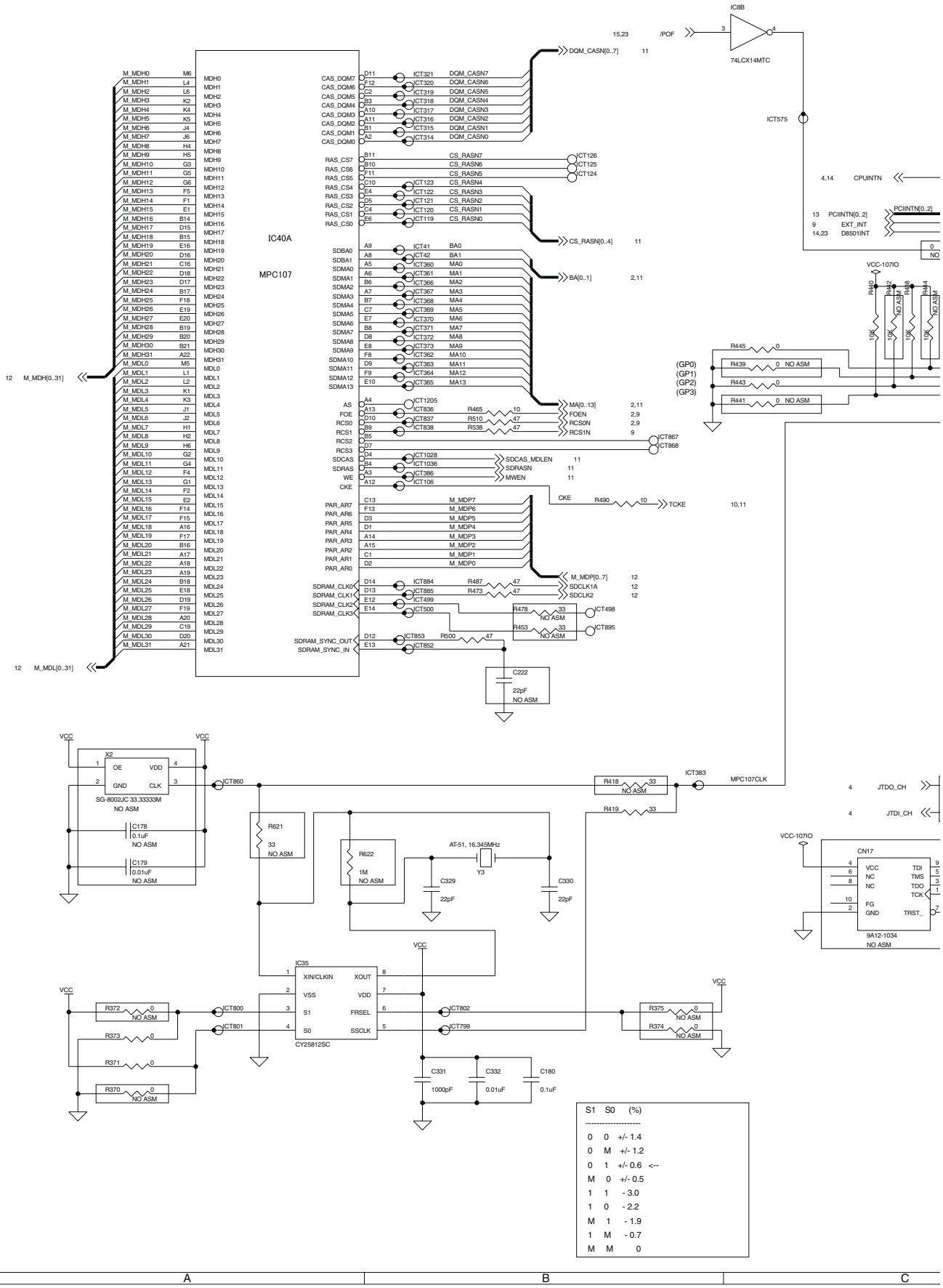

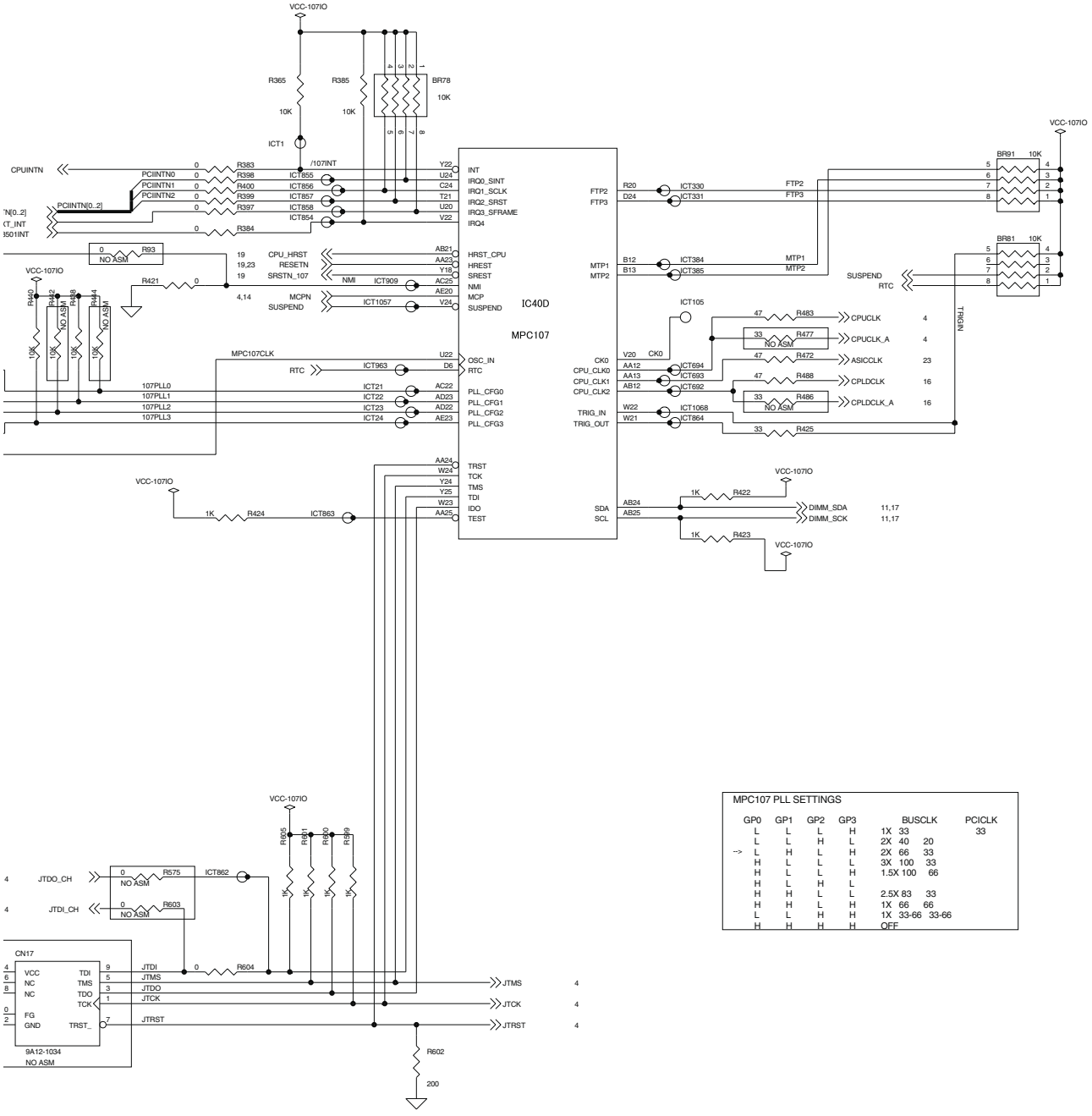

MPC107 PLL SETTINGS

	GP0	GP1	GP2	GP3	BUSCLK	PCICLK
	L	L	L	H	1X 33	33
	L	L	H	L	2X 40 20	
-->	L	H	L	H	2X 66 33	
	H	L	L	L	3X 100 33	
	H	L	L	H	1.5X 100 66	
	H	L	H	L		
	H	H	L	L	2.5X 83 33	
	H	H	L	H	1X 66 66	
	L	L	H	H	1X 33-66 33-66	
	H	H	H	H	OFF	

PRINT CONTROL PWB (CAP(XPC755 / MPC107))

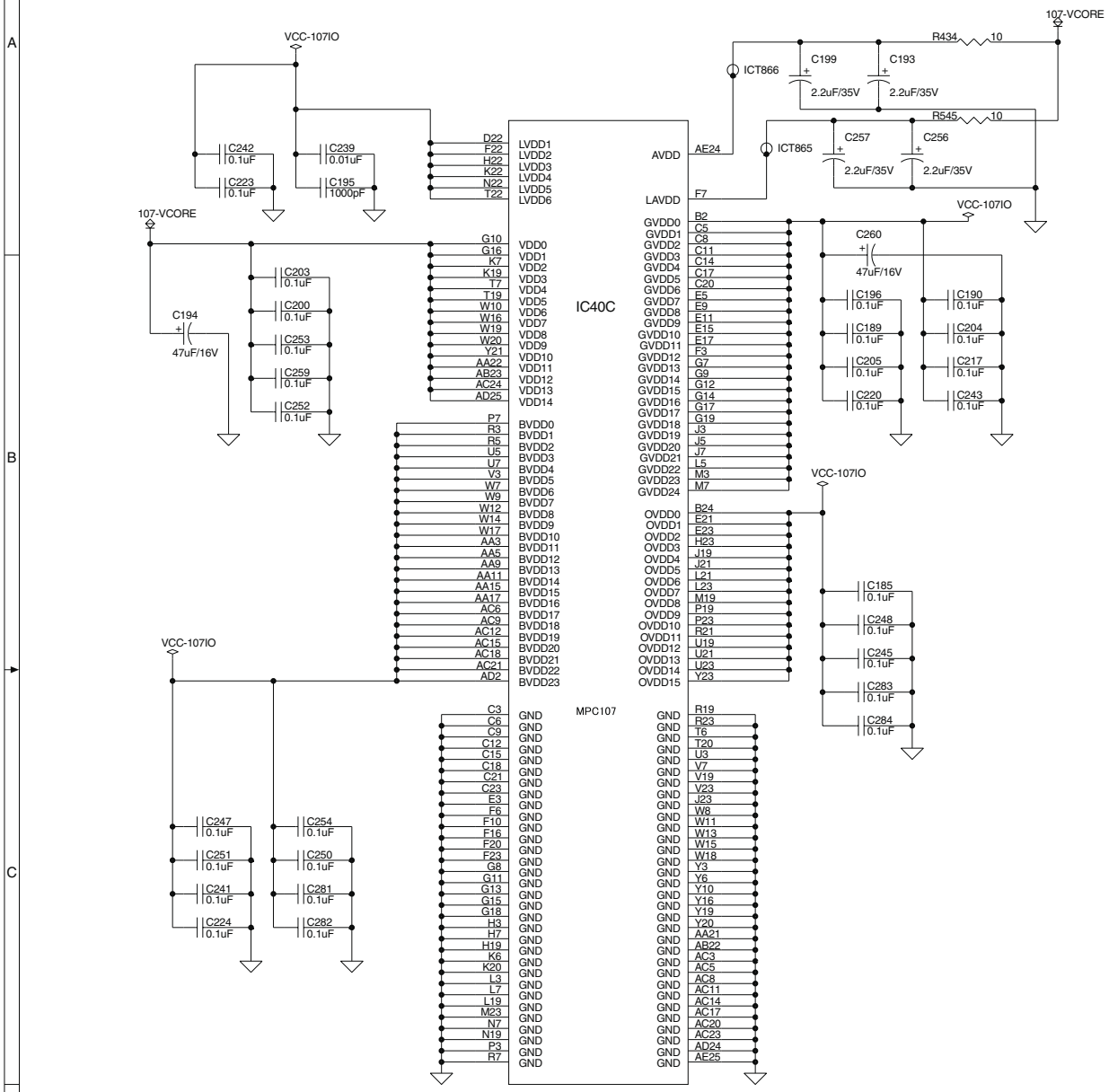

:ORE

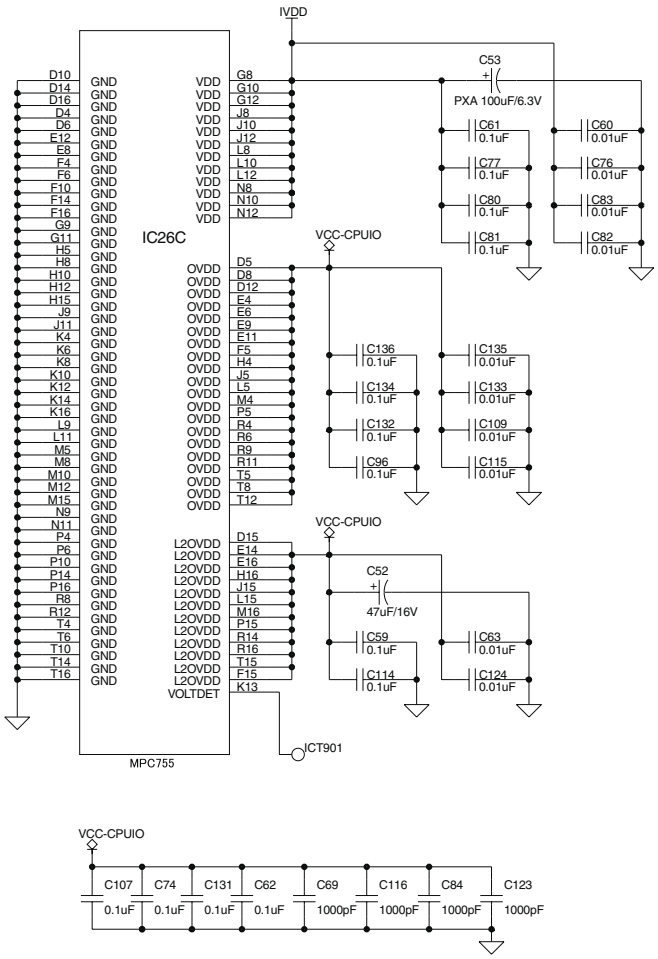
IVDD
C53
PXA 100uF/6.3V
C61 0.1uF
C60 0.01uF
C77 0.1uF
C76 0.01uF
C80 0.1uF
C83 0.01uF
C81 0.1uF
C82 0.01uF
VCC-CPUIO
IC26C
C136 0.1uF
C135 0.01uF
C134 0.1uF
C133 0.01uF
C132 0.1uF
C109 0.01uF
C96 0.1uF
C115 0.01uF
VCC-CPUIO
C52
47uF/16V
C59 0.1uF
C63 0.01uF
C114 0.1uF
C124 0.01uF
CT901
MPC755
VCC-CPUIO
C107 0.1uF
C74 0.1uF
C131 0.1uF
C62 0.1uF
C69 1000pF
C116 1000pF
C84 1000pF
C123 1000pF

PRINT CONTROL PWB (BOOT ROM / BUFFER)

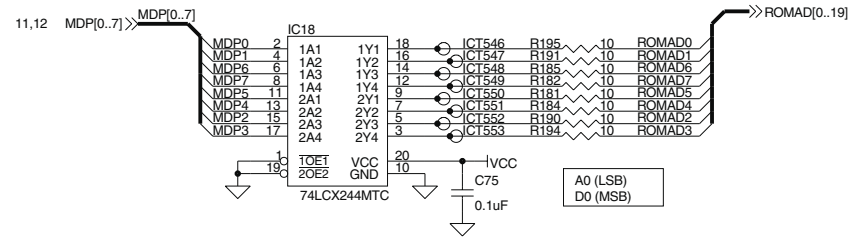

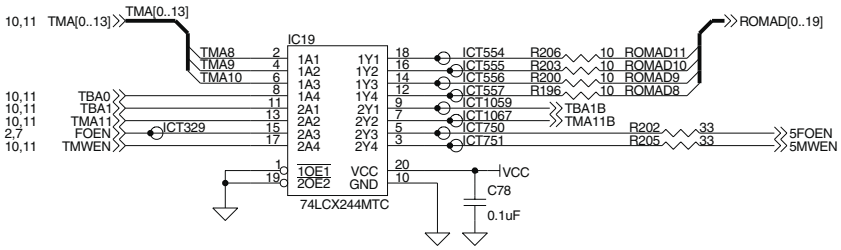

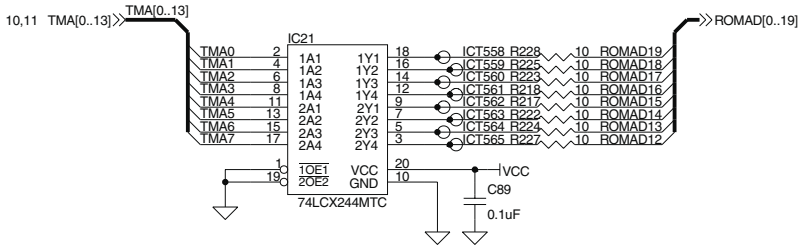

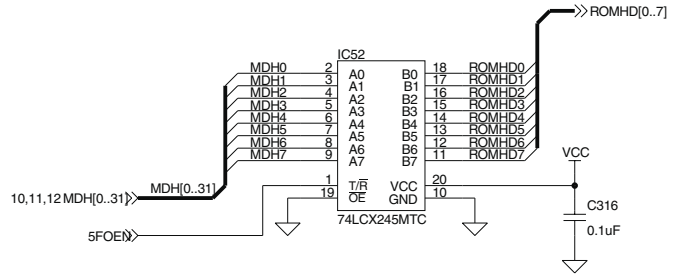

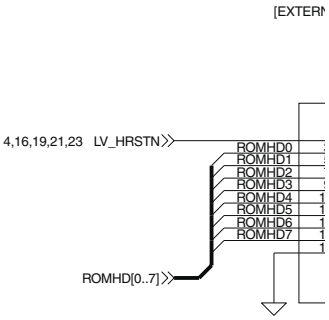

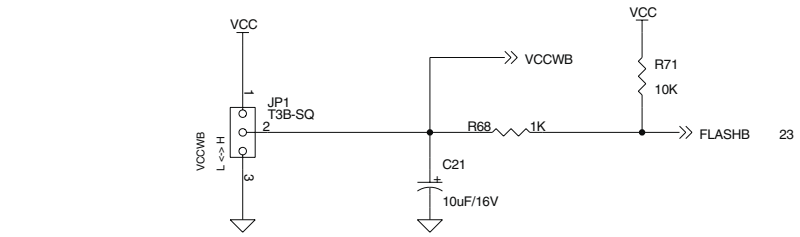
VCC
VCCWB
R71
10K
JP1
T3B-SQ
VCCWB
L <> H
R68
1K
FLASHB
23
C21
10uF/16V

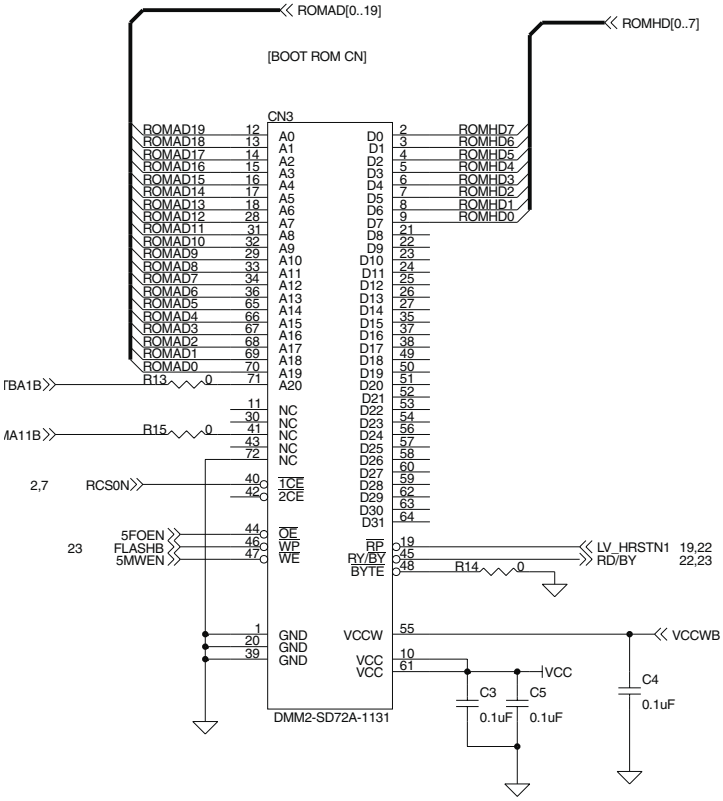
ROMAD[0..19]
ROMHD[0..7]
[BOOT ROM CN]
CN3
DMM2-SD72A-1131
R13
R15
R14
RCS0N
5FOEN
FLASHB
5MWEN
LV_HRSTN1
RD/BY
VCCWB
C3
C4
C5
0.1uF

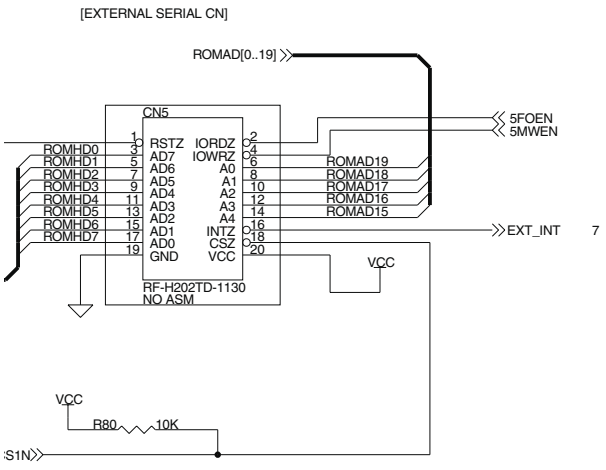
[EXTERNAL SERIAL CN]
ROMAD[0..19]
CN5
RF-H202TD-1130
NO ASM
5FOEN
5MWEN
EXT_INT
VCC
R80
10K

PRINT CONTROL PWB (ON BOARD SDRAM)

256Mbit SDRAM x 4pcs

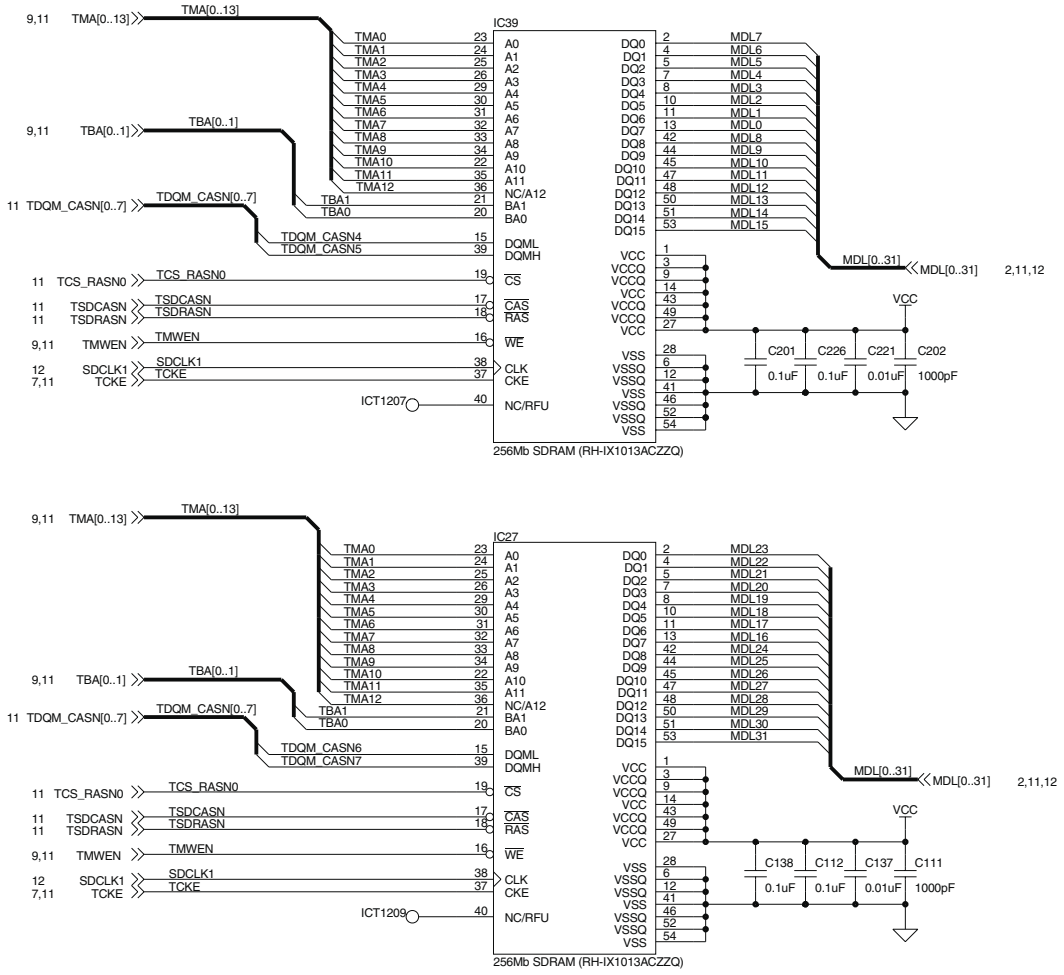

4pcs

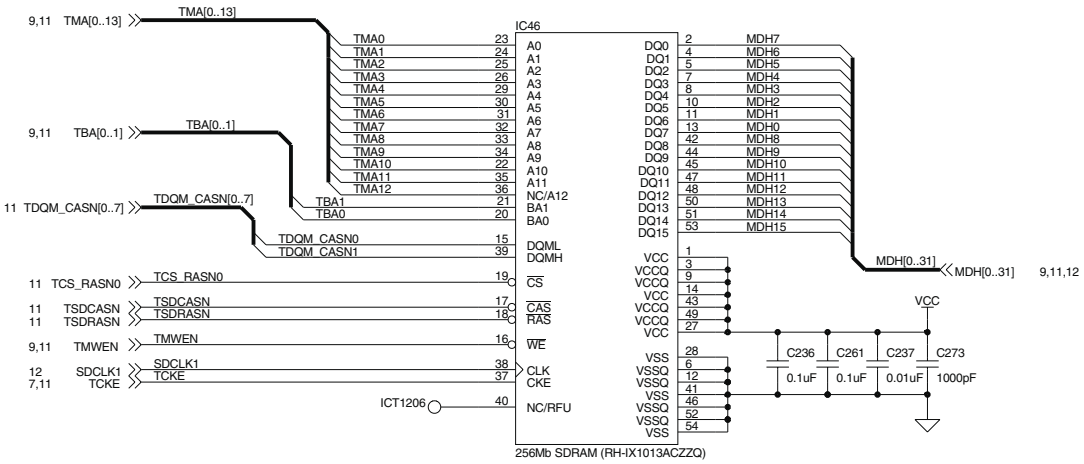
IC46
9,11 TMA[0..13]
TMA[0..13]
9,11 TBA[0..1]
TBA[0..1]
11 TDQM_CASN[0..7]
TDQM_CASN[0..7]
11 TCS_RASN0
TCS_RASN0
11 TSDCASN
11 TSDRASN
TSDCASN
TSDRASN
9,11 TMWEN
TMWEN
12 SDCLK1
7,11 TCKE
SDCLK1
TCKE
ICT1206
TMA0 TMA1 TMA2 TMA3 TMA4 TMA5 TMA6 TMA7 TMA8 TMA9 TMA10 TMA11 TMA12
TBA1 TBA0
TDQM_CASN0 TDQM_CASN1
A0 A1 A2 A3 A4 A5 A6 A7 A8 A9 A10 A11 NC/A12 BA1 BA0
DQML DQMH
CS CAS RAS WE CLK CKE NC/RFU
DQ0 DQ1 DQ2 DQ3 DQ4 DQ5 DQ6 DQ7 DQ8 DQ9 DQ10 DQ11 DQ12 DQ13 DQ14 DQ15
VCC VCCQ VSS VSSQ
MDH7 MDH6 MDH5 MDH4 MDH3 MDH2 MDH1 MDH0 MDH8 MDH9 MDH10 MDH11 MDH12 MDH13 MDH14 MDH15
MDH[0..31]
MDH[0..31] 9,11,12
C236 C261 C237 C273
0.1uF 0.1uF 0.01uF 1000pF
256Mb SDRAM (RH-IX1013ACZZQ)

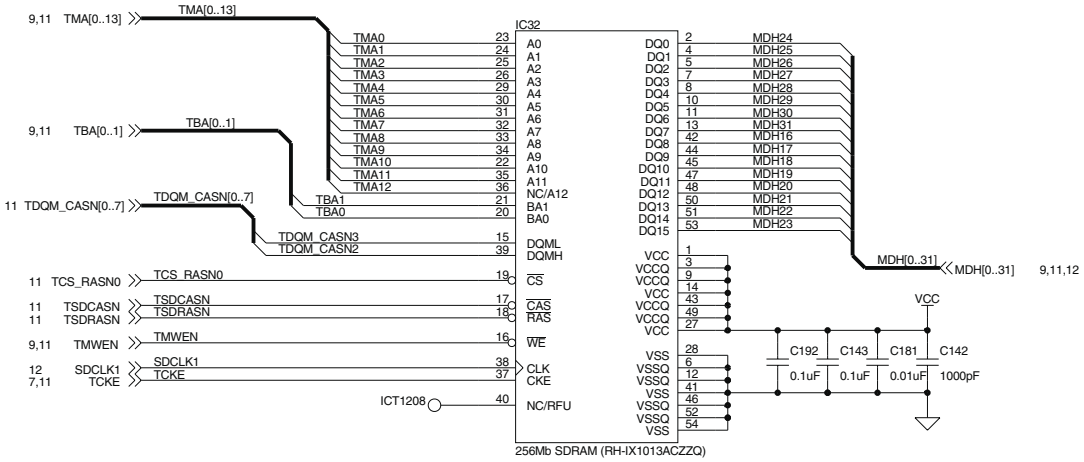
IC32
9,11 TMA[0..13]
TMA[0..13]
9,11 TBA[0..1]
TBA[0..1]
11 TDQM_CASN[0..7]
TDQM_CASN[0..7]
11 TCS_RASN0
TCS_RASN0
11 TSDCASN
11 TSDRASN
TSDCASN
TSDRASN
9,11 TMWEN
TMWEN
12 SDCLK1
7,11 TCKE
SDCLK1
TCKE
ICT1208
TMA0 TMA1 TMA2 TMA3 TMA4 TMA5 TMA6 TMA7 TMA8 TMA9 TMA10 TMA11 TMA12
TBA1 TBA0
TDQM_CASN3 TDQM_CASN2
A0 A1 A2 A3 A4 A5 A6 A7 A8 A9 A10 A11 NC/A12 BA1 BA0
DQML DQMH
CS CAS RAS WE CLK CKE NC/RFU
DQ0 DQ1 DQ2 DQ3 DQ4 DQ5 DQ6 DQ7 DQ8 DQ9 DQ10 DQ11 DQ12 DQ13 DQ14 DQ15
VCC VCCQ VSS VSSQ
MDH24 MDH25 MDH26 MDH27 MDH28 MDH29 MDH30 MDH31 MDH16 MDH17 MDH18 MDH19 MDH20 MDH21 MDH22 MDH23
MDH[0..31]
MDH[0..31] 9,11,12
C192 C143 C181 C142
0.1uF 0.1uF 0.01uF 1000pF
256Mb SDRAM (RH-IX1013ACZZQ)

PRINT CONTROL PWB (SDRAM DIMM SOCKET #0 / #1)

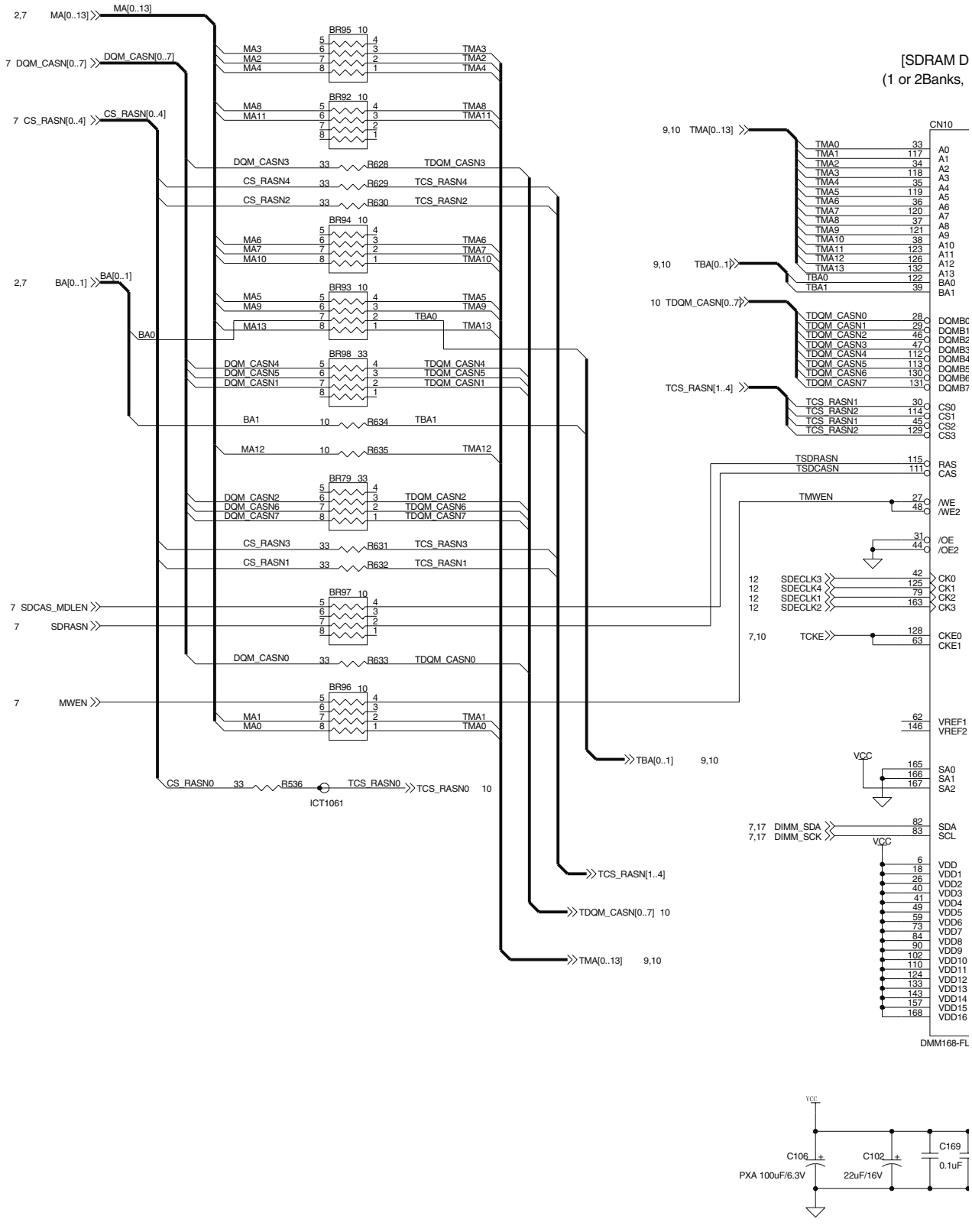

[SDRAM DIMM #0]
(1 or 2Banks, ID=4)

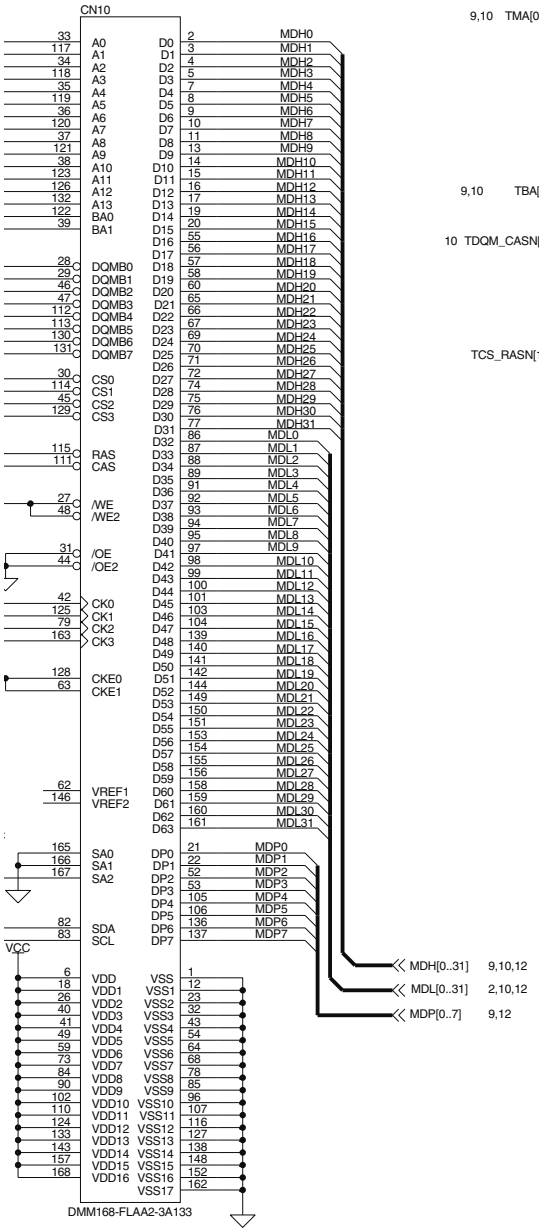

[SDRAM DIMM #1]
(1 or 2Banks, ID=5)

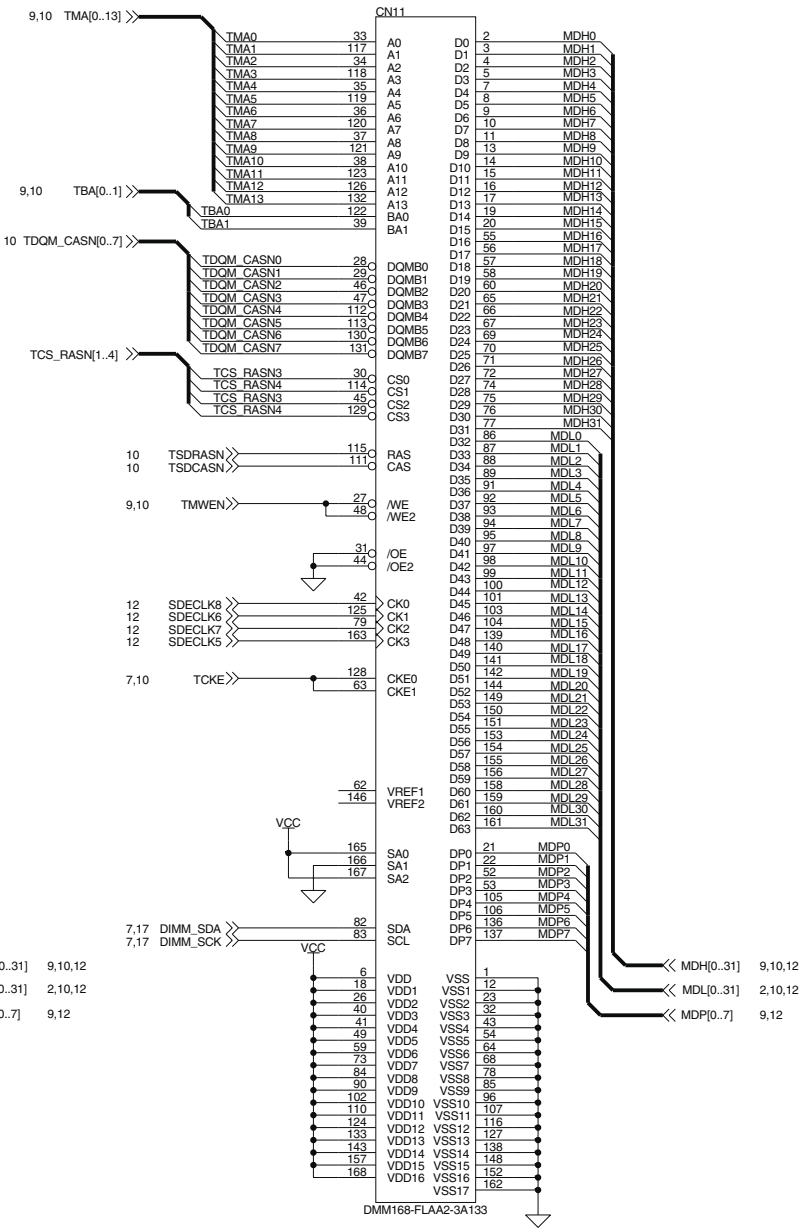

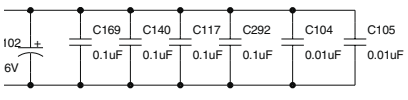

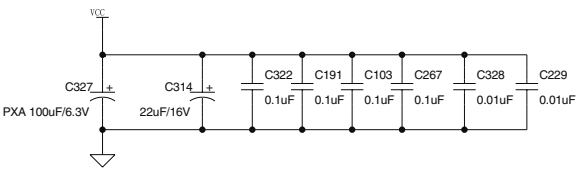

PRINT CONTROL PWB (SDRAM CLKDRV / MEMORY DUMP RES.)

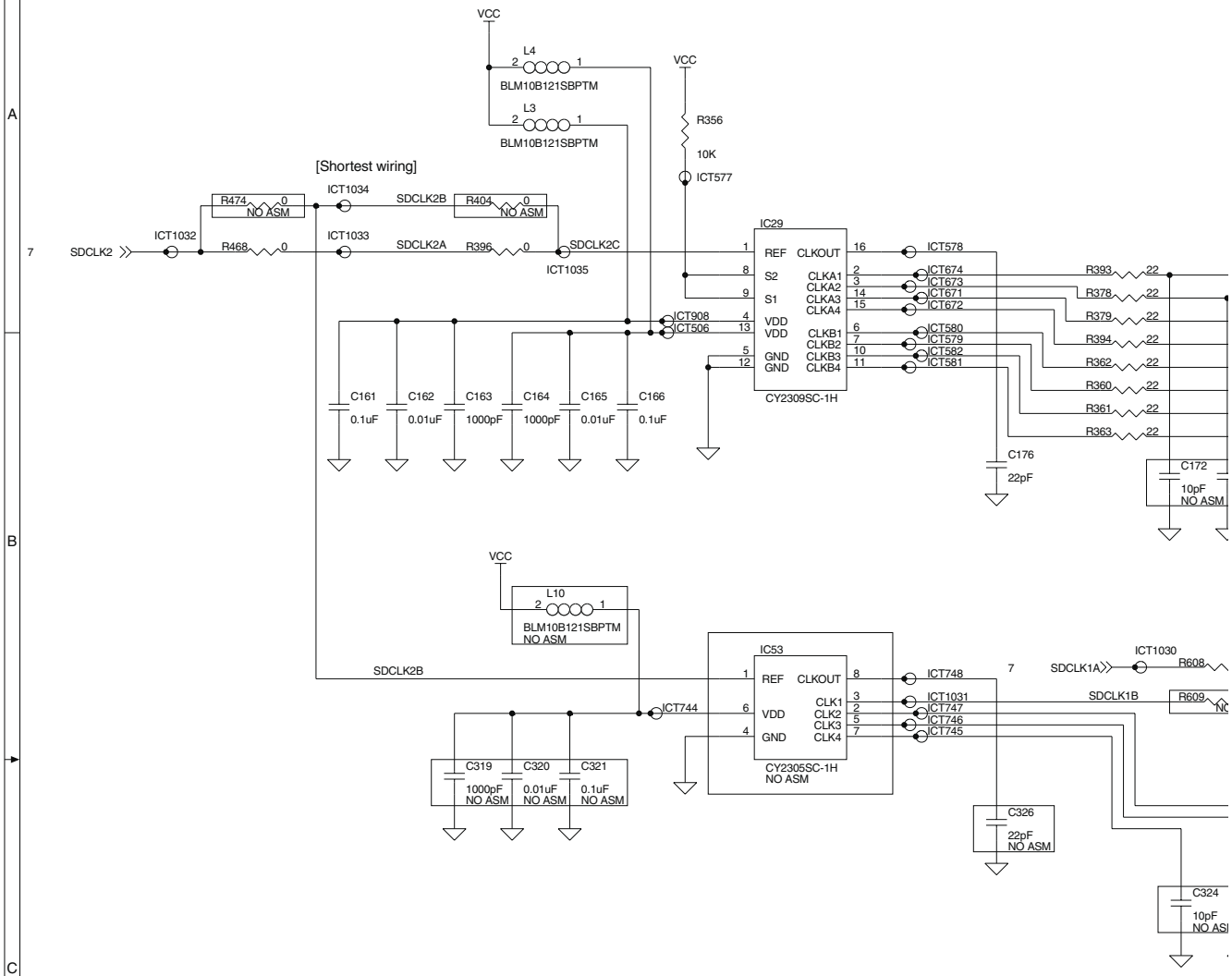

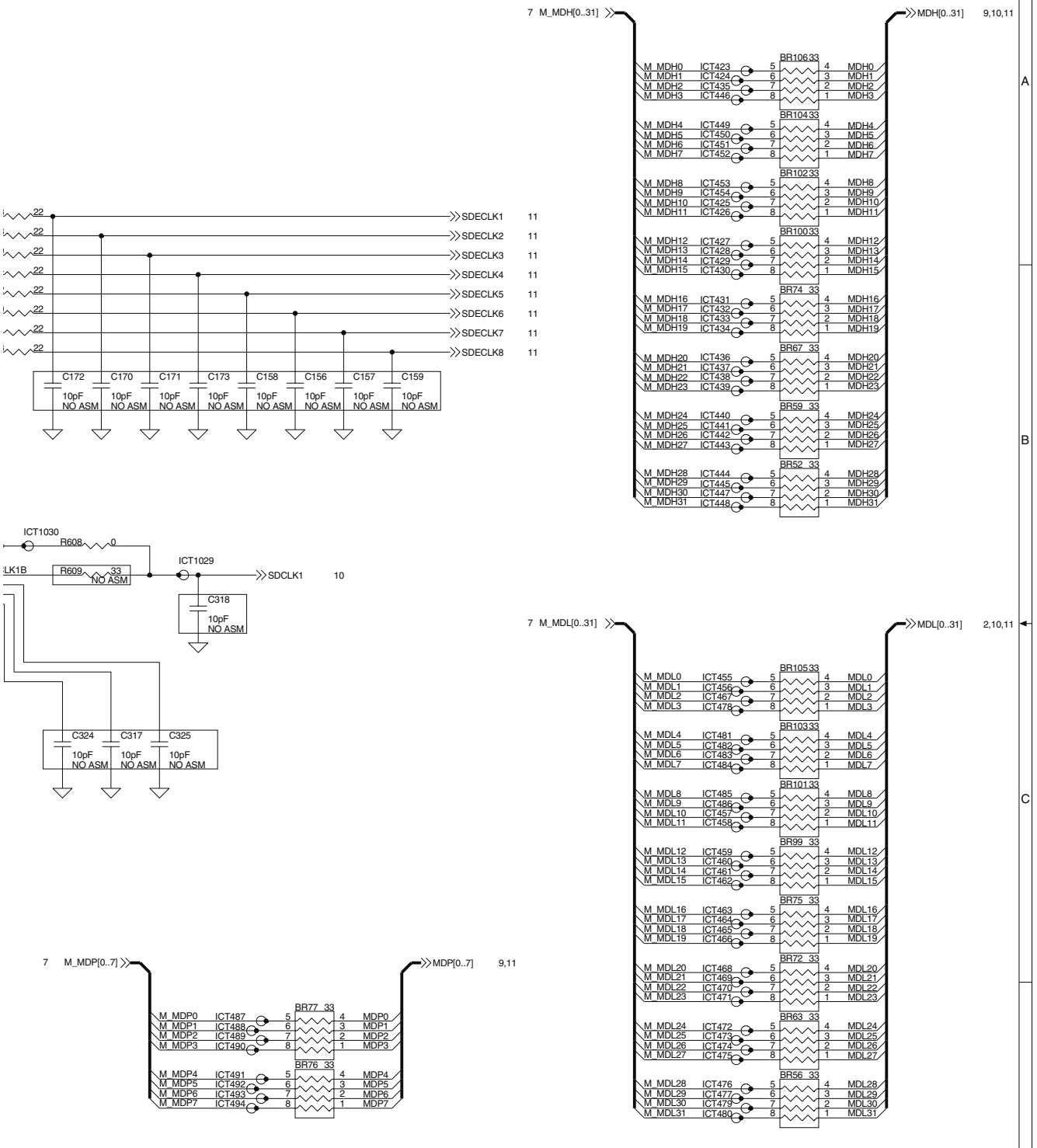
7 M_MDH[0..31]
MDH[0..31] 9,10,11
BR106 33
BR104 33
BR102 33
BR100 33
BR74 33
BR67 33
BR59 33
BR52 33
M_MDH0 ICT423 MDH0
M_MDH1 ICT424 MDH1
M_MDH2 ICT435 MDH2
M_MDH3 ICT446 MDH3
M_MDH4 ICT449 MDH4
M_MDH5 ICT450 MDH5
M_MDH6 ICT451 MDH6
M_MDH7 ICT452 MDH7
M_MDH8 ICT453 MDH8
M_MDH9 ICT454 MDH9
M_MDH10 ICT425 MDH10
M_MDH11 ICT426 MDH11
M_MDH12 ICT427 MDH12
M_MDH13 ICT428 MDH13
M_MDH14 ICT429 MDH14
M_MDH15 ICT430 MDH15
M_MDH16 ICT431 MDH16
M_MDH17 ICT432 MDH17
M_MDH18 ICT433 MDH18
M_MDH19 ICT434 MDH19
M_MDH20 ICT436 MDH20
M_MDH21 ICT437 MDH21
M_MDH22 ICT438 MDH22
M_MDH23 ICT439 MDH23
M_MDH24 ICT440 MDH24
M_MDH25 ICT441 MDH25
M_MDH26 ICT442 MDH26
M_MDH27 ICT443 MDH27
M_MDH28 ICT444 MDH28
M_MDH29 ICT445 MDH29
M_MDH30 ICT447 MDH30
M_MDH31 ICT448 MDH31
22
SDECLK1 11
SDECLK2 11
SDECLK3 11
SDECLK4 11
SDECLK5 11
SDECLK6 11
SDECLK7 11
SDECLK8 11
C172 C170 C171 C173 C158 C156 C157 C159
10pF NO ASM
ICT1030
R608 0
LK1B
R609 33 NO ASM
ICT1029
SDCLK1 10
C318 10pF NO ASM
C324 C317 C325 10pF NO ASM
7 M_MDL[0..31]
MDL[0..31] 2,10,11
BR105 33
BR103 33
BR101 33
BR99 33
BR75 33
BR72 33
BR63 33
BR56 33
M_MDL0 ICT455 MDL0
M_MDL1 ICT456 MDL1
M_MDL2 ICT467 MDL2
M_MDL3 ICT478 MDL3
M_MDL4 ICT481 MDL4
M_MDL5 ICT482 MDL5
M_MDL6 ICT483 MDL6
M_MDL7 ICT484 MDL7
M_MDL8 ICT485 MDL8
M_MDL9 ICT486 MDL9
M_MDL10 ICT457 MDL10
M_MDL11 ICT458 MDL11
M_MDL12 ICT459 MDL12
M_MDL13 ICT460 MDL13
M_MDL14 ICT461 MDL14
M_MDL15 ICT462 MDL15
M_MDL16 ICT463 MDL16
M_MDL17 ICT464 MDL17
M_MDL18 ICT465 MDL18
M_MDL19 ICT466 MDL19
M_MDL20 ICT468 MDL20
M_MDL21 ICT469 MDL21
M_MDL22 ICT470 MDL22
M_MDL23 ICT471 MDL23
M_MDL24 ICT472 MDL24
M_MDL25 ICT473 MDL25
M_MDL26 ICT474 MDL26
M_MDL27 ICT475 MDL27
M_MDL28 ICT476 MDL28
M_MDL29 ICT477 MDL29
M_MDL30 ICT479 MDL30
M_MDL31 ICT480 MDL31
7 M_MDP[0..7]
MDP[0..7] 9,11
BR77 33
BR76 33
M_MDP0 ICT487 MDP0
M_MDP1 ICT488 MDP1
M_MDP2 ICT489 MDP2
M_MDP3 ICT490 MDP3
M_MDP4 ICT491 MDP4
M_MDP5 ICT492 MDP5
M_MDP6 ICT493 MDP6
M_MDP7 ICT494 MDP7

PRINT CONTROL PWB (PCI SLOT #1(NIC),#2(HDD)/SCNIF SLOT)

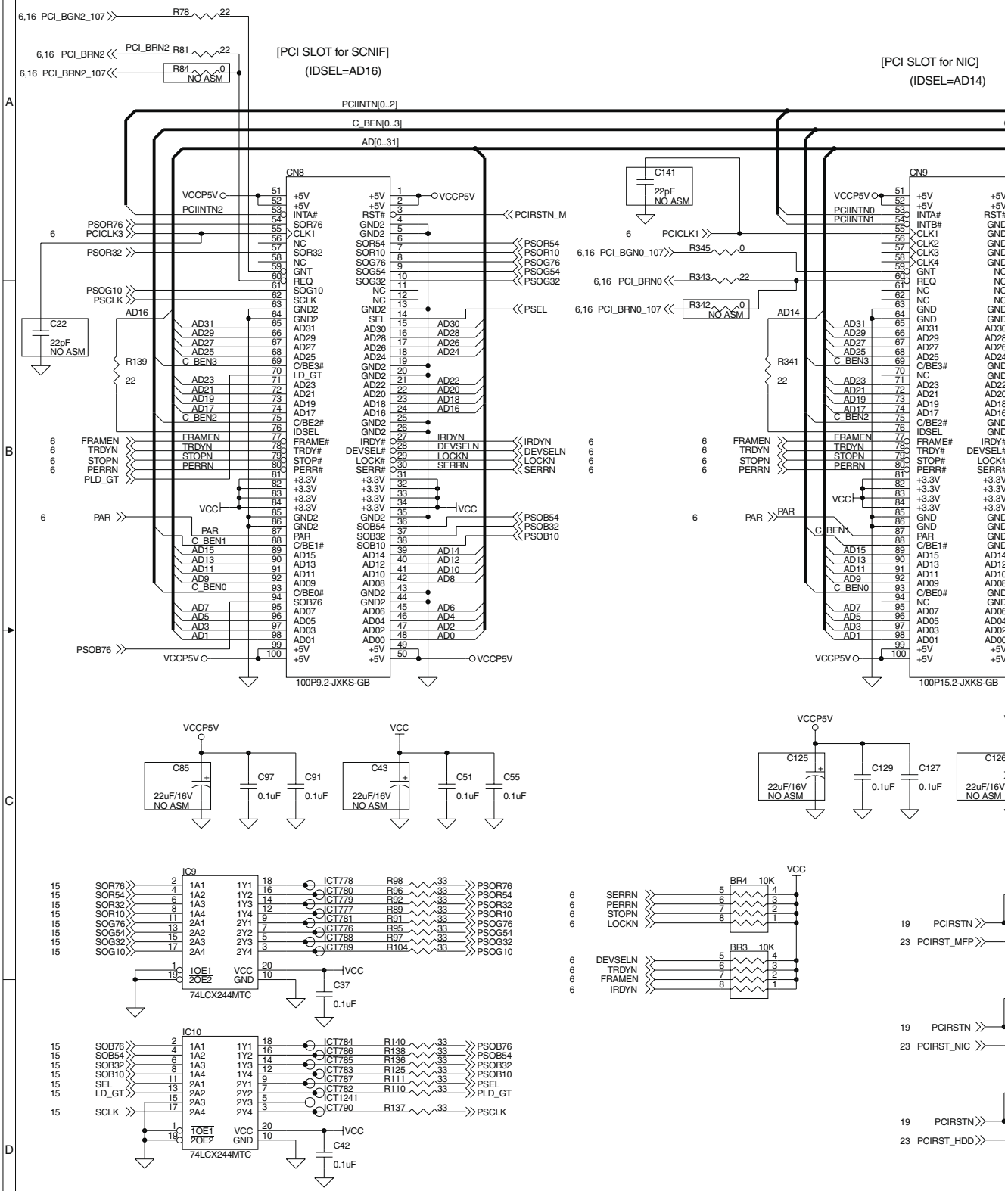

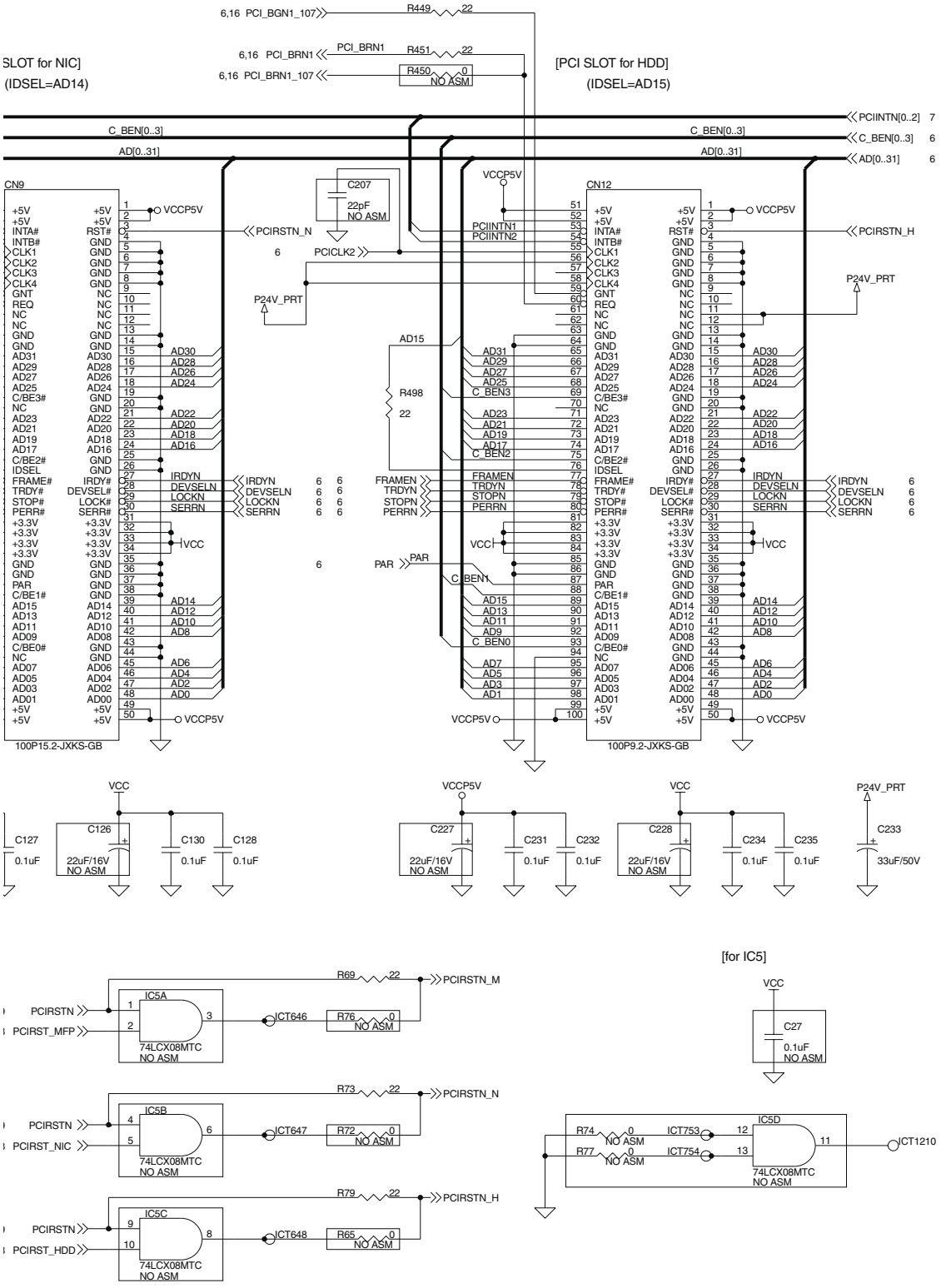
[PCI SLOT for NIC]
(IDSEL=AD14)
[PCI SLOT for HDD]
(IDSEL=AD15)
6,16 PCI_BGN1_107
6,16 PCI_BRN1
6,16 PCI_BRN1_107
PCI_BRN1
R449 22
R451 22
R450 0
NO ASM
PCIINTN[0..2] 7
C_BEN[0..3] 6
AD[0..31] 6
C_BEN[0..3]
AD[0..31]
CN9
CN12
100P15.2-JXKS-GB
100P9.2-JXKS-GB
VCCP5V
PCIRSTN_N
PCIRSTN_H
PCICLK2 6
P24V_PRT
C207
22pF
NO ASM
PCIINTN1
PCIINTN2
AD15
R498
22
FRAMEN
TRDYN
STOPN
PERRN
PAR
C_BEN1
C_BEN3
C_BEN2
C_BEN0
IRDYN
DEVSELN
LOCKN
SERRN
VCC
C126
C127
C128
C130
C227
C228
C231
C232
C233
C234
C235
0.1uF
22uF/16V
NO ASM
33uF/50V
[for IC5]
C27
PCIRSTN
PCIRST_MFP
PCIRST_NIC
PCIRST_HDD
PCIRSTN_M
PCIRSTN_N
PCIRSTN_H
IC5A
IC5B
IC5C
IC5D
74LCX08MTC
NO ASM
ICT646
ICT647
ICT648
ICT753
ICT754
ICT1210
R69 22
R73 22
R79 22
R76 0
R72 0
R65 0
R74 0
R77 0

PRINT CONTROL PWB (TEST PIN)

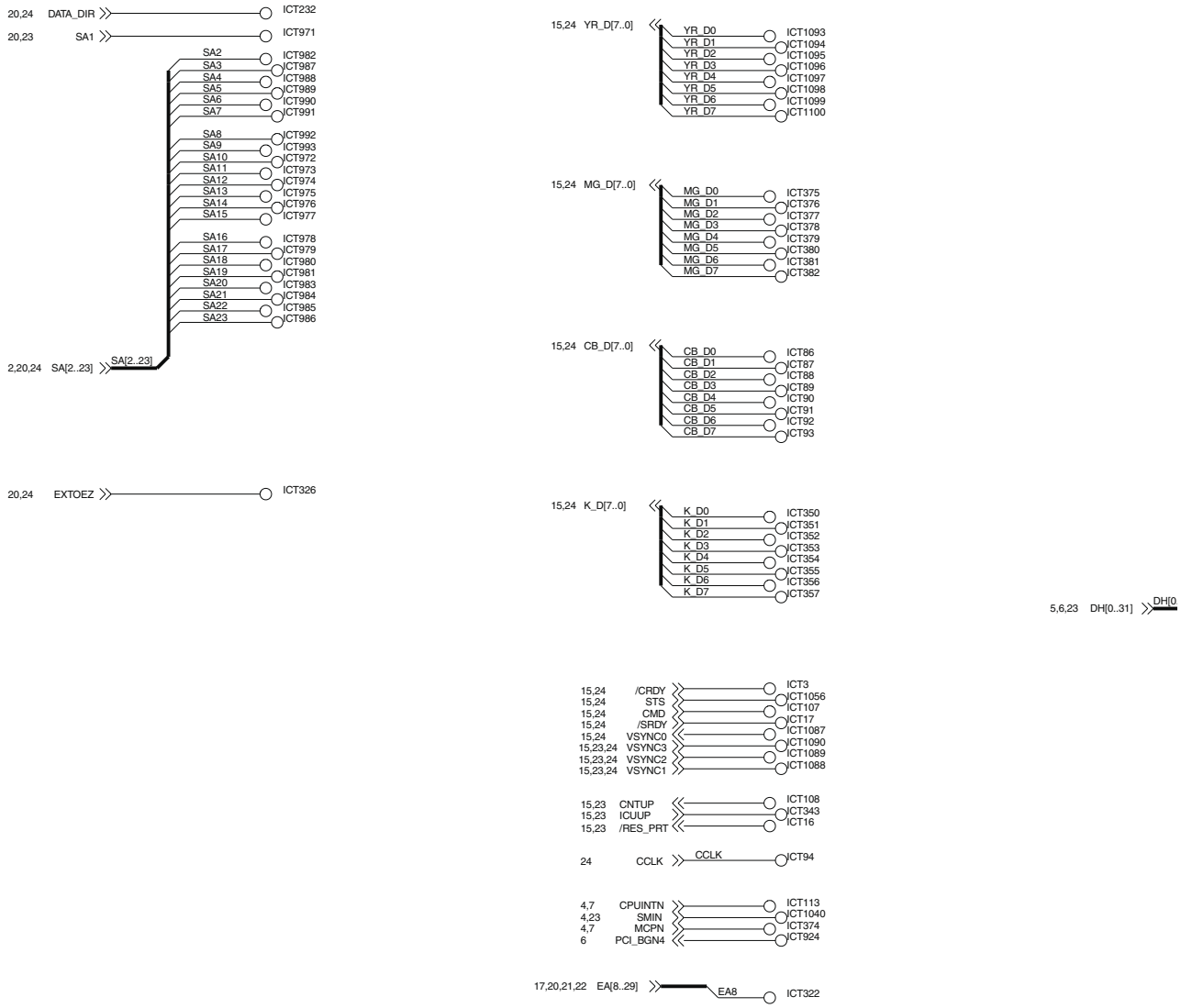

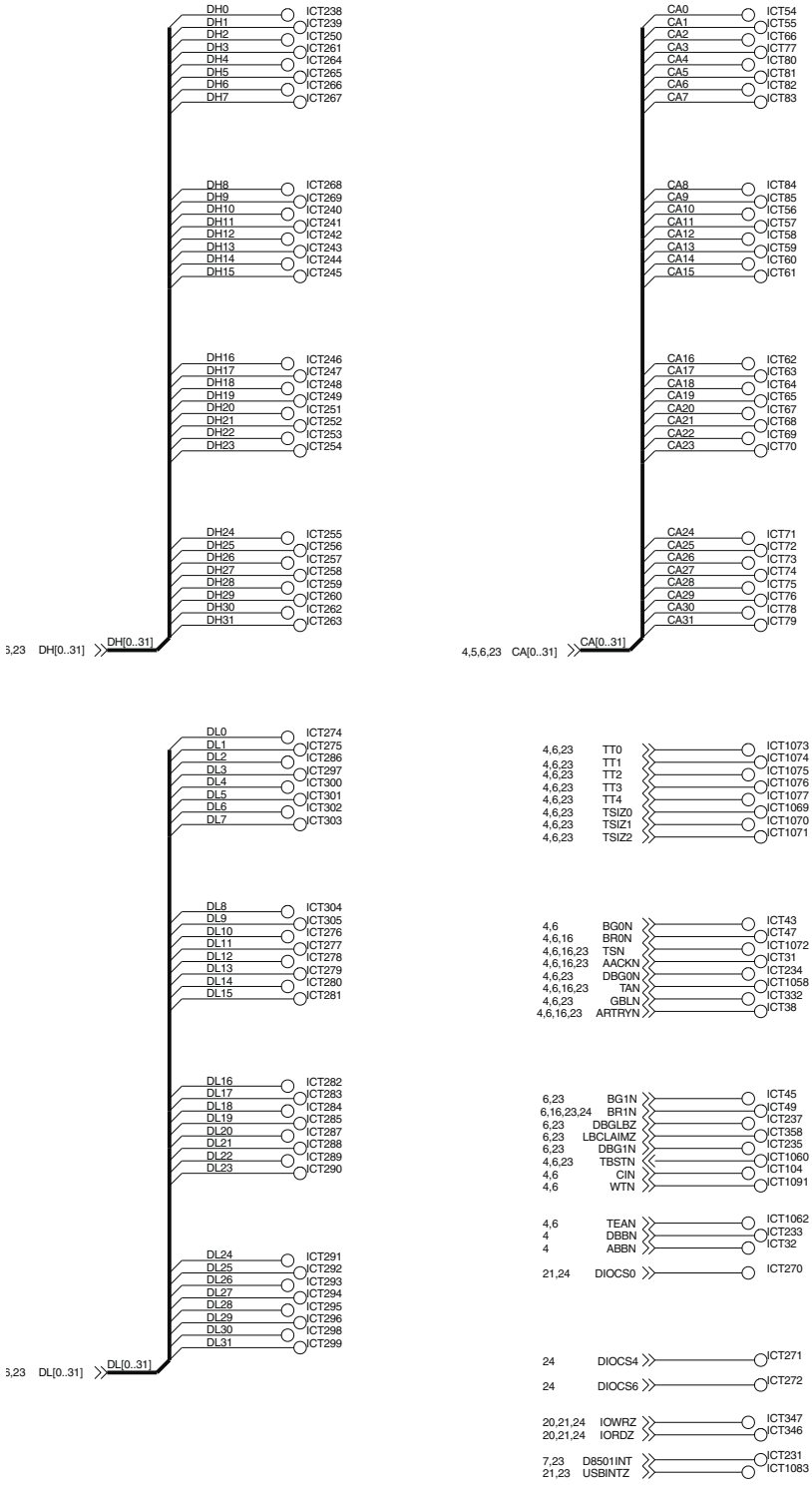
DH0 ICT238
DH1 ICT239
DH2 ICT250
DH3 ICT261
DH4 ICT264
DH5 ICT265
DH6 ICT266
DH7 ICT267
DH8 ICT268
DH9 ICT269
DH10 ICT240
DH11 ICT241
DH12 ICT242
DH13 ICT243
DH14 ICT244
DH15 ICT245
DH16 ICT246
DH17 ICT247
DH18 ICT248
DH19 ICT249
DH20 ICT251
DH21 ICT252
DH22 ICT253
DH23 ICT254
DH24 ICT255
DH25 ICT256
DH26 ICT257
DH27 ICT258
DH28 ICT259
DH29 ICT260
DH30 ICT262
DH31 ICT263
3,23 DH[0..31]
DH[0..31]
CA0 ICT54
CA1 ICT55
CA2 ICT66
CA3 ICT77
CA4 ICT80
CA5 ICT81
CA6 ICT82
CA7 ICT83
CA8 ICT84
CA9 ICT85
CA10 ICT56
CA11 ICT57
CA12 ICT58
CA13 ICT59
CA14 ICT60
CA15 ICT61
CA16 ICT62
CA17 ICT63
CA18 ICT64
CA19 ICT65
CA20 ICT67
CA21 ICT68
CA22 ICT69
CA23 ICT70
CA24 ICT71
CA25 ICT72
CA26 ICT73
CA27 ICT74
CA28 ICT75
CA29 ICT76
CA30 ICT78
CA31 ICT79
4,5,6,23 CA[0..31]
CA[0..31]
DL0 ICT274
DL1 ICT275
DL2 ICT286
DL3 ICT297
DL4 ICT300
DL5 ICT301
DL6 ICT302
DL7 ICT303
DL8 ICT304
DL9 ICT305
DL10 ICT276
DL11 ICT277
DL12 ICT278
DL13 ICT279
DL14 ICT280
DL15 ICT281
DL16 ICT282
DL17 ICT283
DL18 ICT284
DL19 ICT285
DL20 ICT287
DL21 ICT288
DL22 ICT289
DL23 ICT290
DL24 ICT291
DL25 ICT292
DL26 ICT293
DL27 ICT294
DL28 ICT295
DL29 ICT296
DL30 ICT298
DL31 ICT299
3,23 DL[0..31]
DL[0..31]
4,6,23 TT0 ICT1073
4,6,23 TT1 ICT1074
4,6,23 TT2 ICT1075
4,6,23 TT3 ICT1076
4,6,23 TT4 ICT1077
4,6,23 TSIZ0 ICT1069
4,6,23 TSIZ1 ICT1070
4,6,23 TSIZ2 ICT1071
4,6 BG0N ICT43
4,6,16 BR0N ICT47
4,6,16,23 TSN ICT1072
4,6,16,23 AACKN ICT31
4,6,23 DBG0N ICT234
4,6,16,23 TAN ICT1058
4,6,23 GBLN ICT332
4,6,16,23 ARTRYN ICT38
6,23 BG1N ICT45
6,16,23,24 BR1N ICT49
6,23 DBGLBZ ICT237
6,23 LBCLAIMZ ICT358
6,23 DBG1N ICT235
4,6,23 TBSTN ICT1060
4,6 CIN ICT104
4,6 WTN ICT1091
4,6 TEAN ICT1062
4 DBBN ICT233
4 ABBN ICT32
21,24 DIOCS0 ICT270
24 DIOCS4 ICT271
24 DIOCS6 ICT272
20,21,24 IOWRZ ICT347
20,21,24 IORDZ ICT346
7,23 D8501INT ICT231
21,23 USBINTZ ICT1083

PRINT CONTROL PWB (ENGINE INTERFACE)

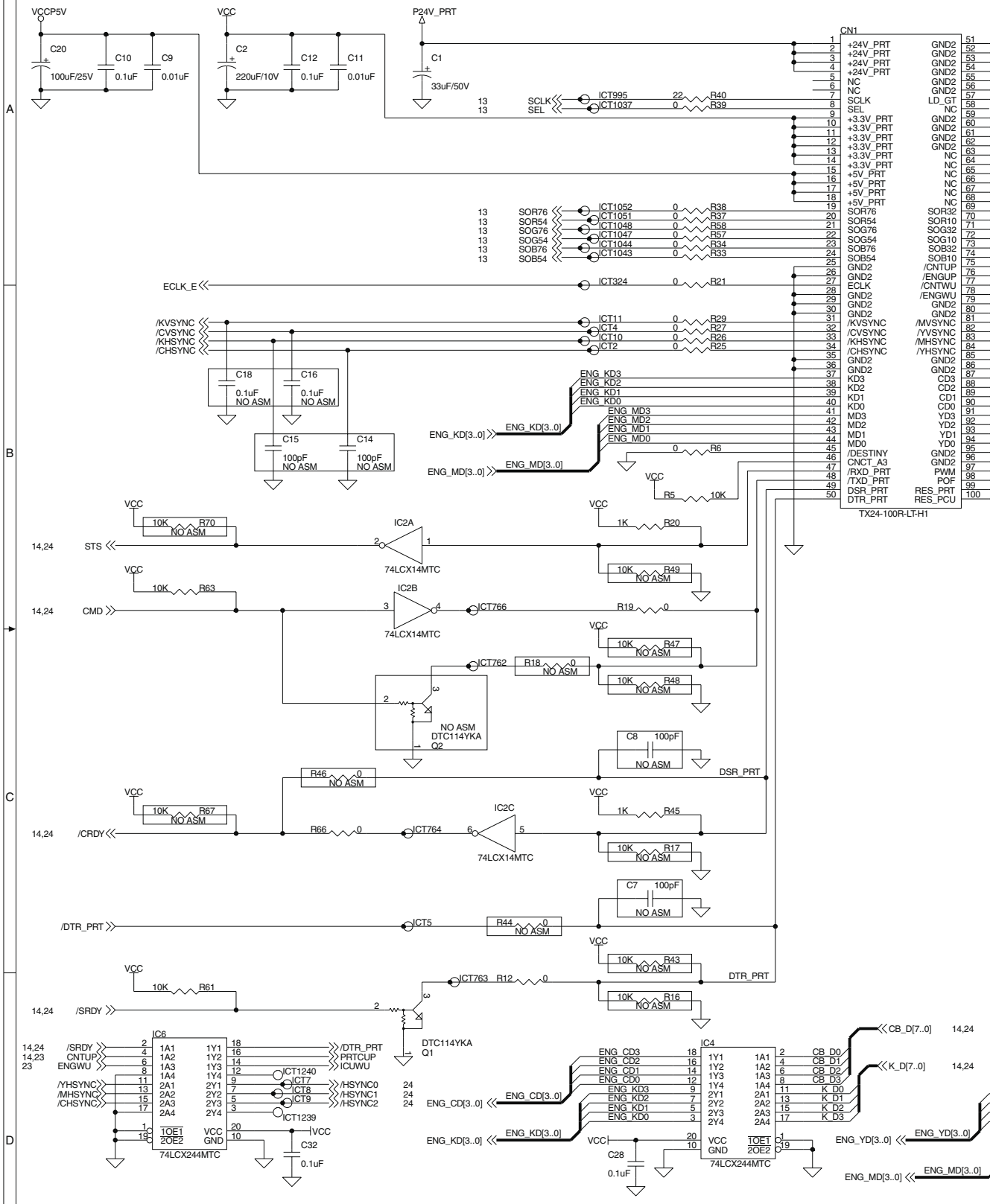

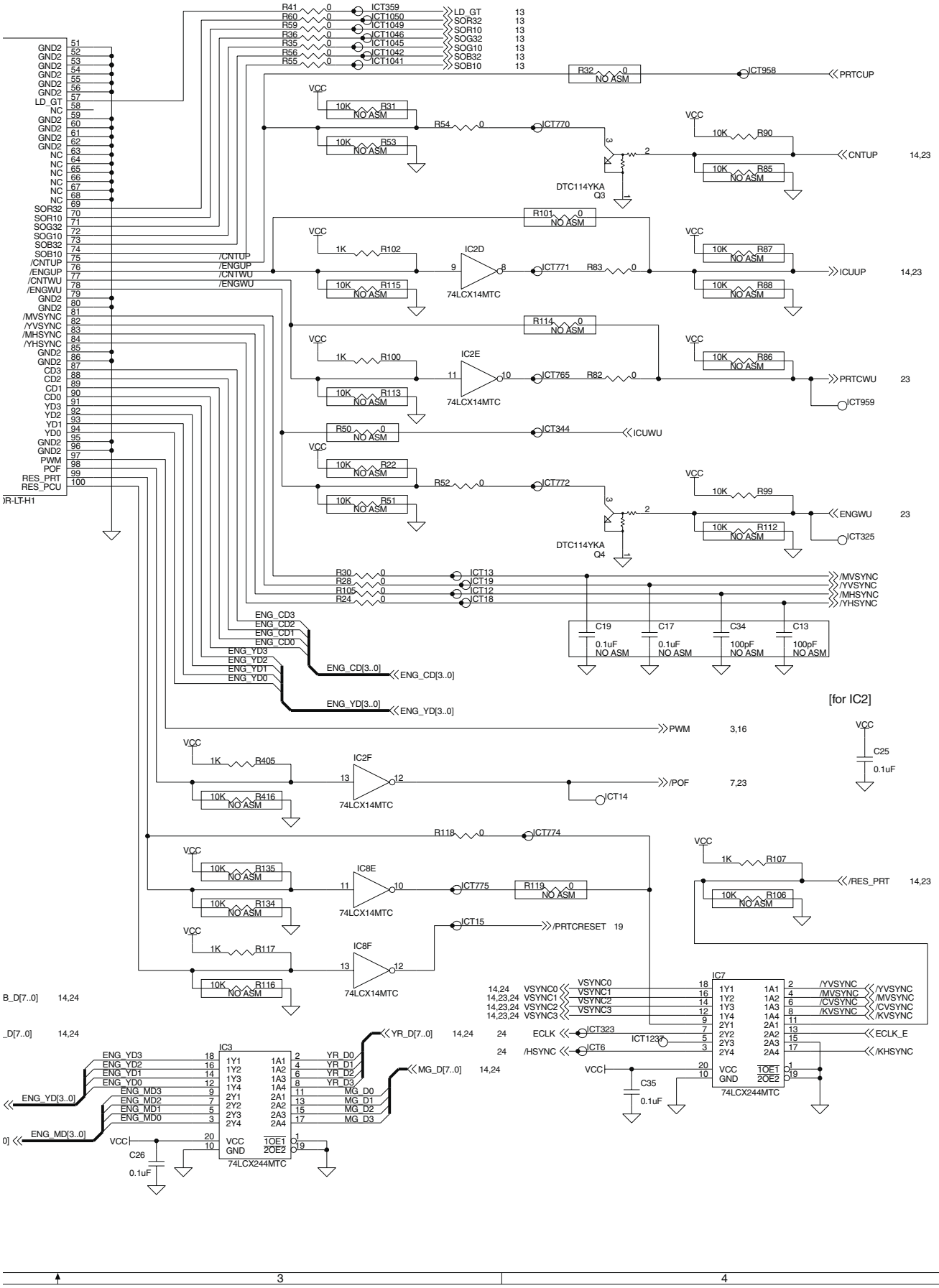
R41 0 ICT359 LD_GT 13
R60 0 ICT1050 SOR32 13
R59 0 ICT1049 SOR10 13
R36 0 ICT1046 SOG32 13
R35 0 ICT1045 SOG10 13
R56 0 ICT1042 SOB32 13
R55 0 ICT1041 SOB10 13
R32 0 NO ASM ICT958 PRTCUP
VCC
10K R31 NO ASM
10K R53 NO ASM
R54 0 ICT770
DTC114YKA Q3
10K R90
10K R85 NO ASM
CNTUP 14,23
R101 0 NO ASM
1K R102
10K R115 NO ASM
IC2D 74LCX14MTC
ICT771 R83 0
10K R87 NO ASM
10K R88 NO ASM
ICUUP 14,23
R114 0 NO ASM
1K R100
10K R113 NO ASM
IC2E 74LCX14MTC
ICT765 R82 0
10K R86 NO ASM
PRTCWU 23
ICT959
R50 0 NO ASM ICT344 ICUWU
1K R22
10K R51 NO ASM
R52 0 ICT772
DTC114YKA Q4
10K R99
10K R112 NO ASM
ENGWU 23
ICT325
R30 0 ICT13
R28 0 ICT19
R105 0 ICT12
R24 0 ICT18
/MVSYNC
/YVSYNC
/MHSYNC
/YHSYNC
C19 0.1uF NO ASM
C17 0.1uF NO ASM
C34 100pF NO ASM
C13 100pF NO ASM
ENG_CD3
ENG_CD2
ENG_CD1
ENG_CD0
ENG_YD3
ENG_YD2
ENG_YD1
ENG_YD0
ENG_CD[3..0]
ENG_YD[3..0]
[for IC2]
PWM 3,16
C25 0.1uF
1K R405
10K R416 NO ASM
IC2F 74LCX14MTC
/POF 7,23
ICT14
R118 0 ICT774
10K R135 NO ASM
10K R134 NO ASM
IC8E 74LCX14MTC
ICT775 R119 0 NO ASM
1K R107
10K R106 NO ASM
/RES_PRT 14,23
ICT15 /PRTCRESET 19
1K R117
10K R116 NO ASM
IC8F 74LCX14MTC
IC7
VSYNC0 VSYNC1 VSYNC2 VSYNC3
/YVSYNC /MVSYNC /CVSYNC /KVSYNC
ECLK ICT323 ICT1237
/HSYNC ICT6
ECLK_E
/KHSYNC
C35 0.1uF
74LCX244MTC
IC3
ENG_YD3 ENG_YD2 ENG_YD1 ENG_YD0
ENG_MD3 ENG_MD2 ENG_MD1 ENG_MD0
YR_D0 YR_D1 YR_D2 YR_D3
MG_D0 MG_D1 MG_D2 MG_D3
C26 0.1uF
74LCX244MTC

PRINT CONTROL PWB (D3032)

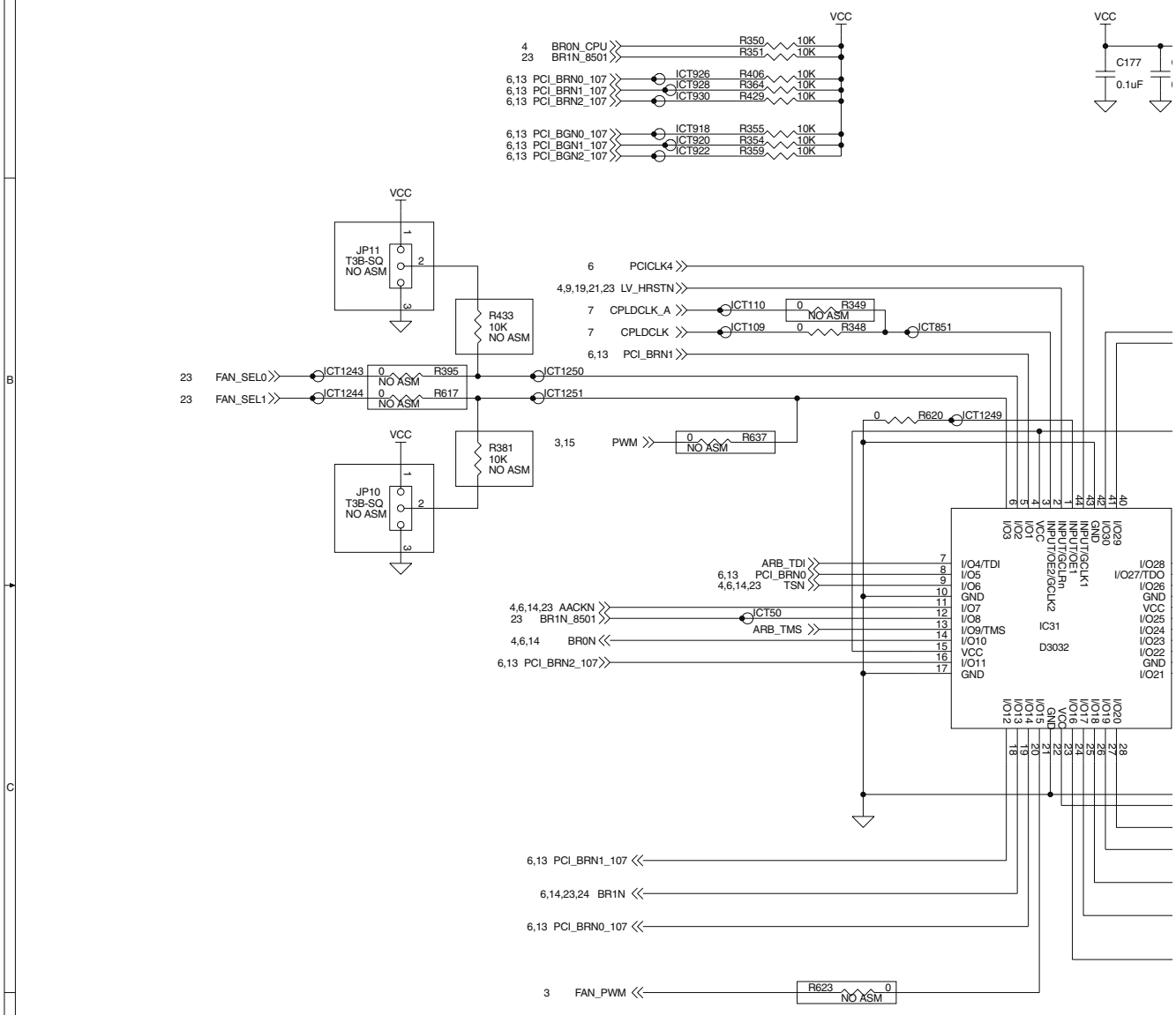

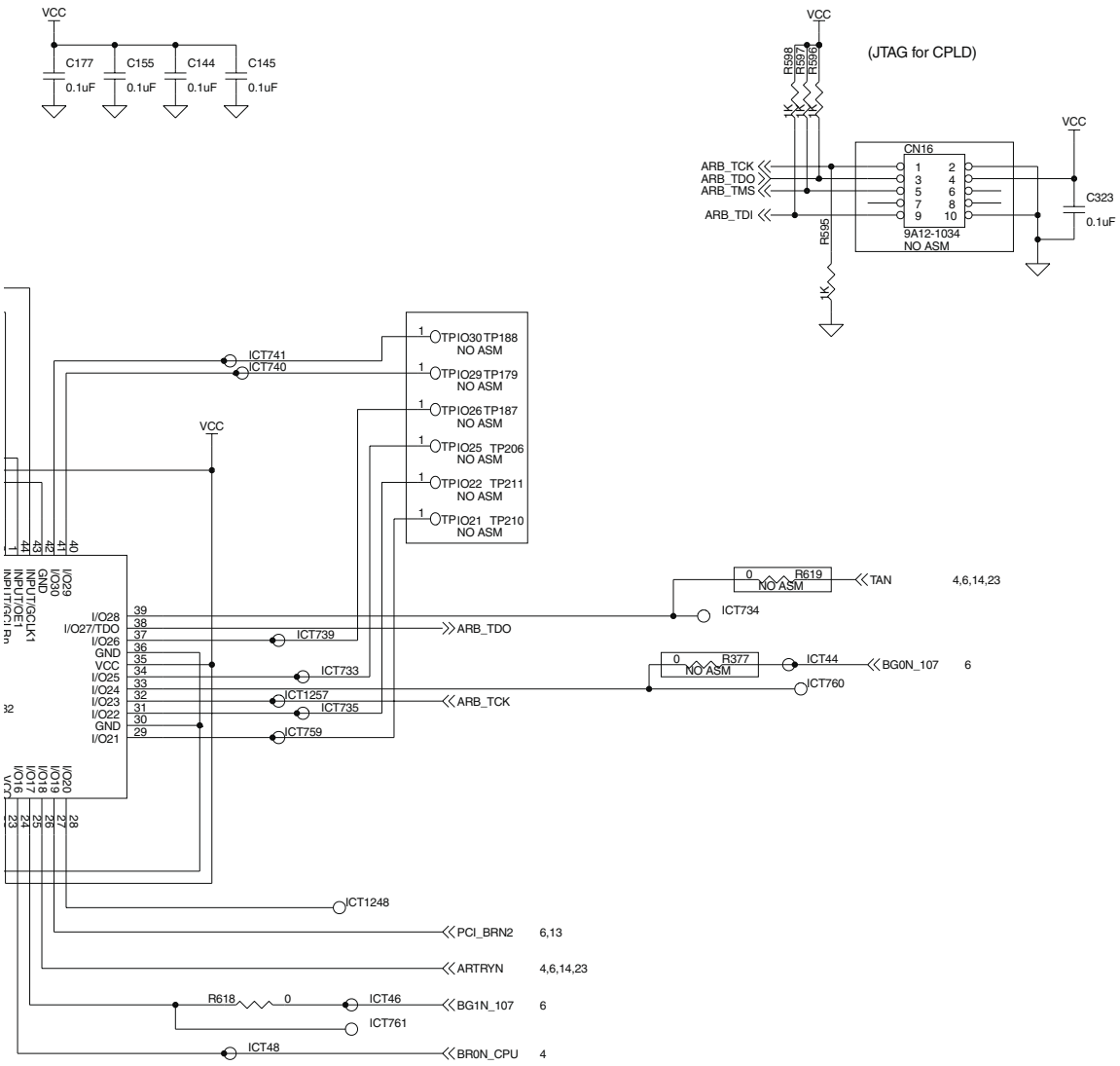
VCC
C177 0.1uF
C155 0.1uF
C144 0.1uF
C145 0.1uF
(JTAG for CPLD)
R598 1K
R597 1K
R596 1K
CN16
ARB_TCK
ARB_TDO
ARB_TMS
ARB_TDI
9A12-1034
NO ASM
C323 0.1uF
R595 1K
TP IO30 TP188 NO ASM
TP IO29 TP179 NO ASM
TP IO26 TP187 NO ASM
TP IO25 TP206 NO ASM
TP IO22 TP211 NO ASM
TP IO21 TP210 NO ASM
ICT741
ICT740
ICT739
ICT733
ICT1257
ICT735
ICT759
ICT734
ICT760
ICT44
ICT1248
ICT46
ICT761
ICT48
R619 0 NO ASM
R377 0 NO ASM
R618 0
TAN 4,6,14,23
BG0N_107 6
ARB_TDO
ARB_TCK
PCI_BRN2 6,13
ARTRYN 4,6,14,23
BG1N_107 6
BR0N_CPU 4

PRINT CONTROL PWB (RTC / BATTERY / EEPROM)

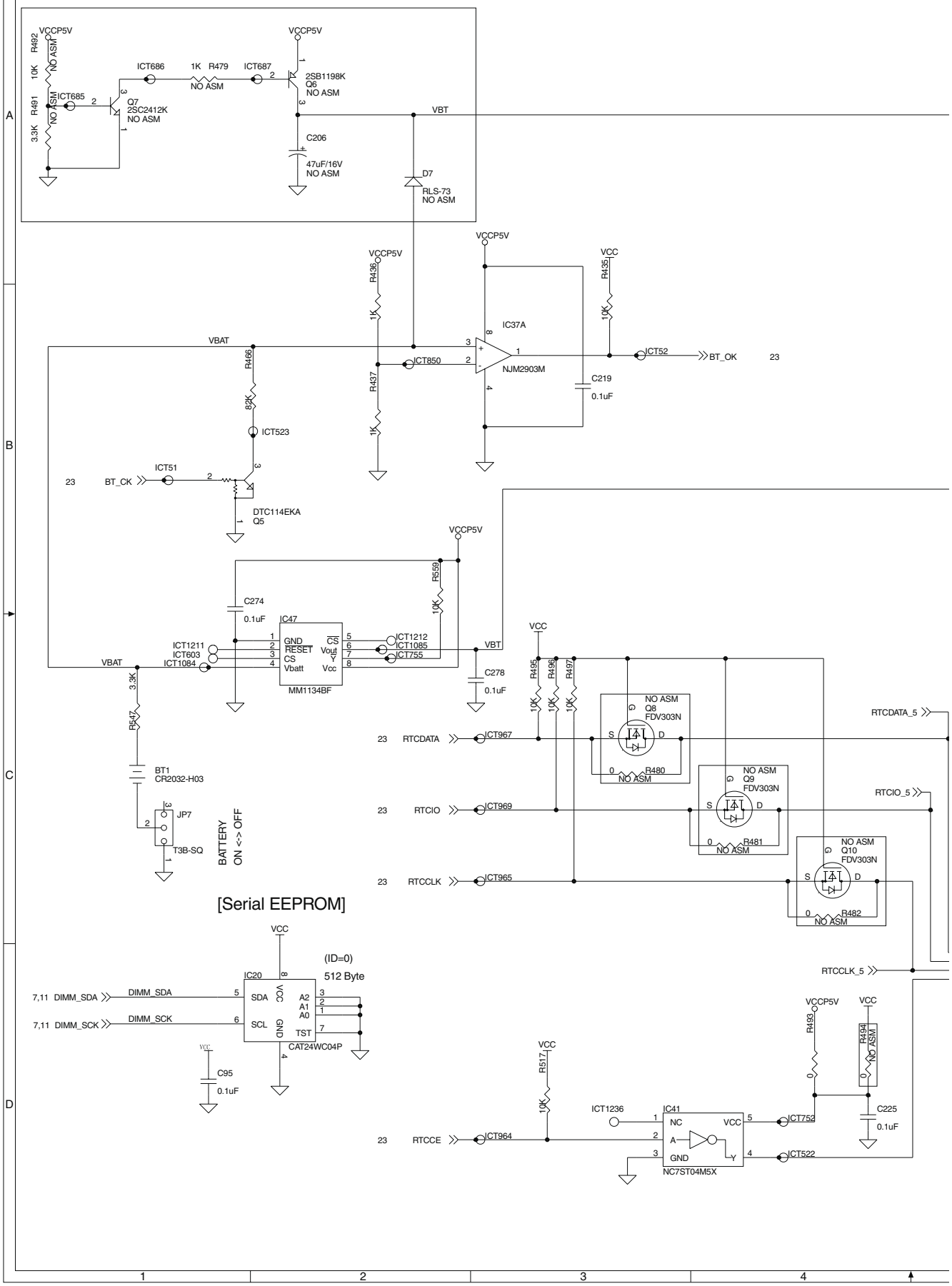

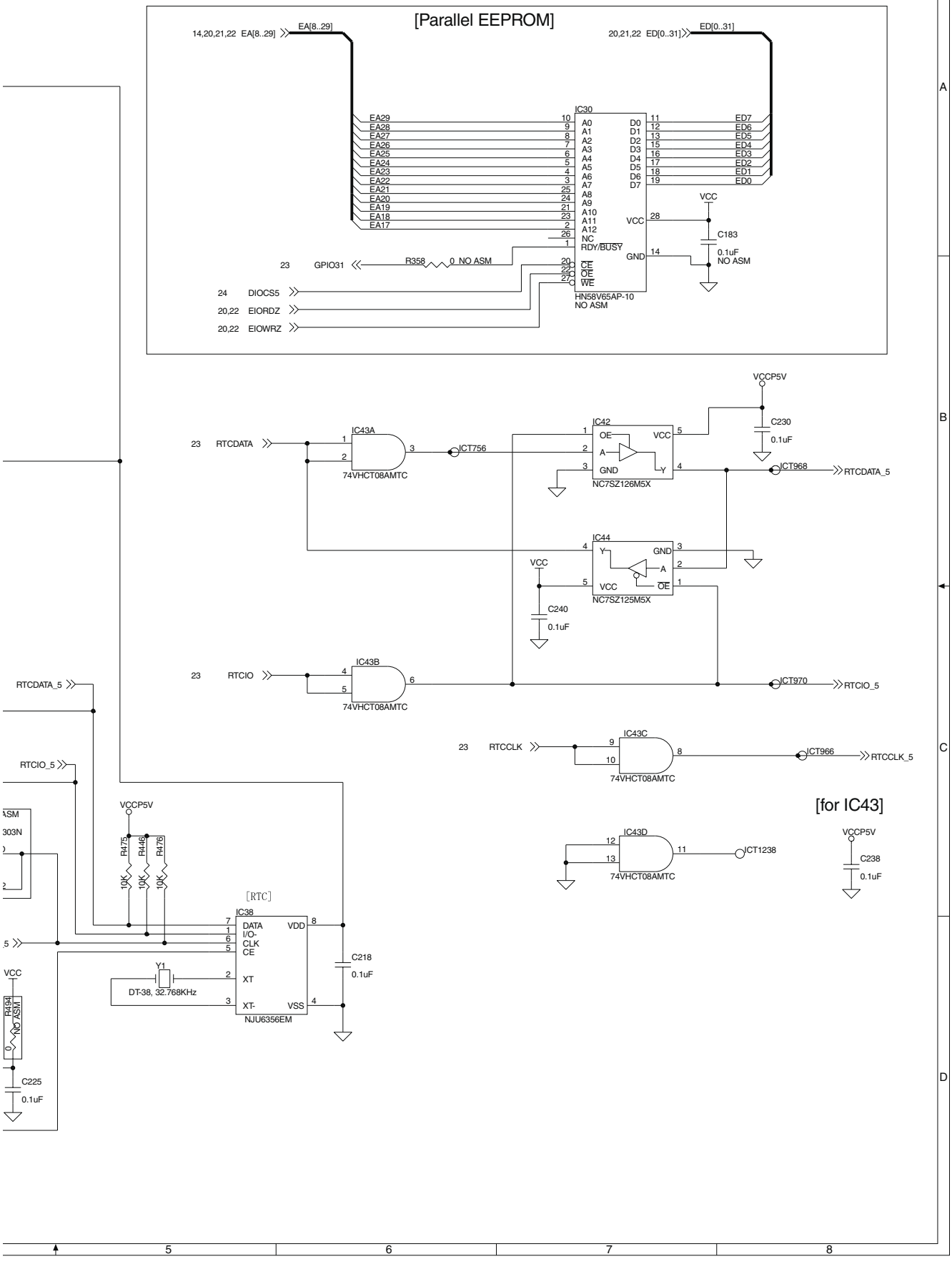
[Parallel EEPROM]
14,20,21,22 EA[8..29]
EA[8..29]
20,21,22 ED[0..31]
ED[0..31]
IC30
HN58V65AP-10
NO ASM
23 GPIO31
R358 0 NO ASM
24 DIOCS5
20,22 EIORDZ
20,22 EIOWRZ
C183 0.1uF NO ASM
VCC
VCCP5V
23 RTCDATA
IC43A
74VHCT08AMTC
ICT756
IC42
NC7SZ126M5X
C230 0.1uF
ICT968
RTCDATA_5
IC44
NC7SZ125M5X
C240 0.1uF
23 RTCIO
IC43B
74VHCT08AMTC
ICT970
RTCIO_5
23 RTCCLK
IC43C
74VHCT08AMTC
ICT966
RTCCLK_5
[for IC43]
IC43D
74VHCT08AMTC
ICT1238
C238 0.1uF
[RTC]
IC38
DATA
I/O-
CLK
CE
XT
XT-
VDD
VSS
NJU6356EM
Y1
DT-38, 32.768KHz
C218 0.1uF
R475 10K
R446 10K
R476 10K
R494 0 NO ASM
C225 0.1uF

PRINT CONTROL PWB (IEEE1284 I/F)

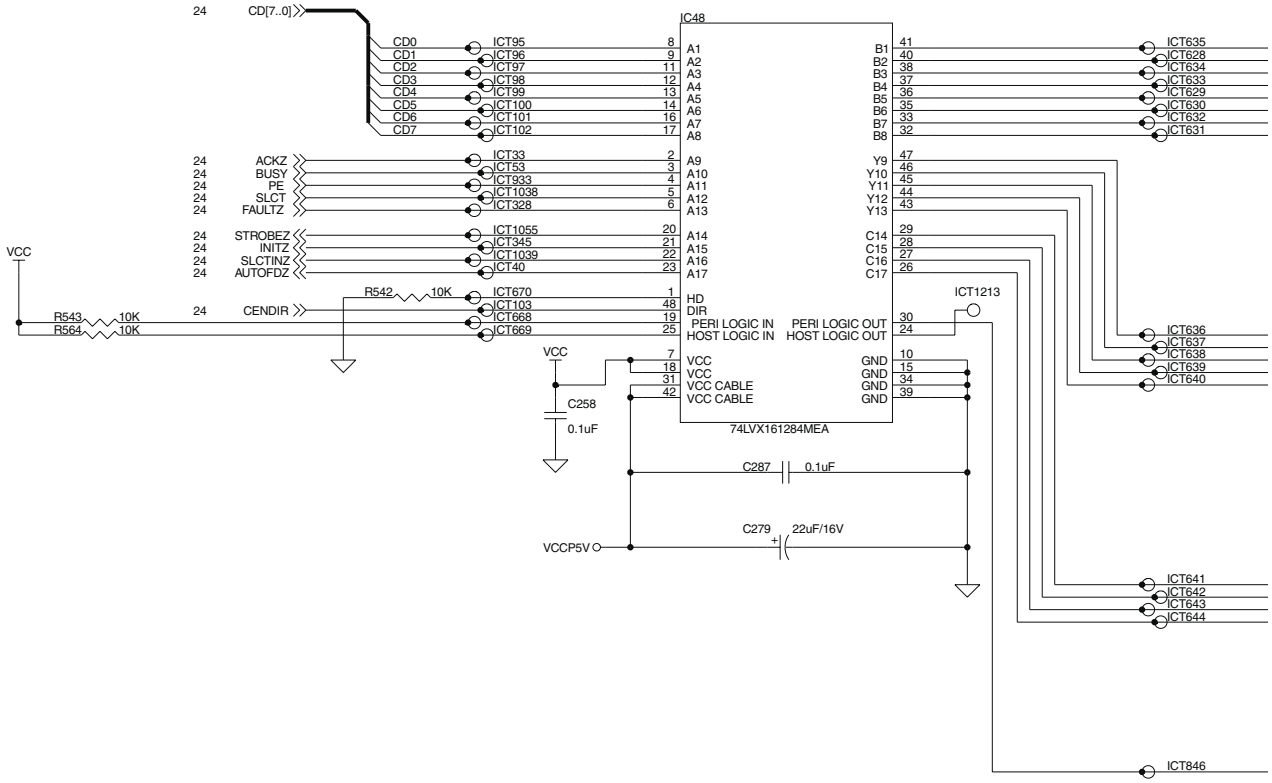

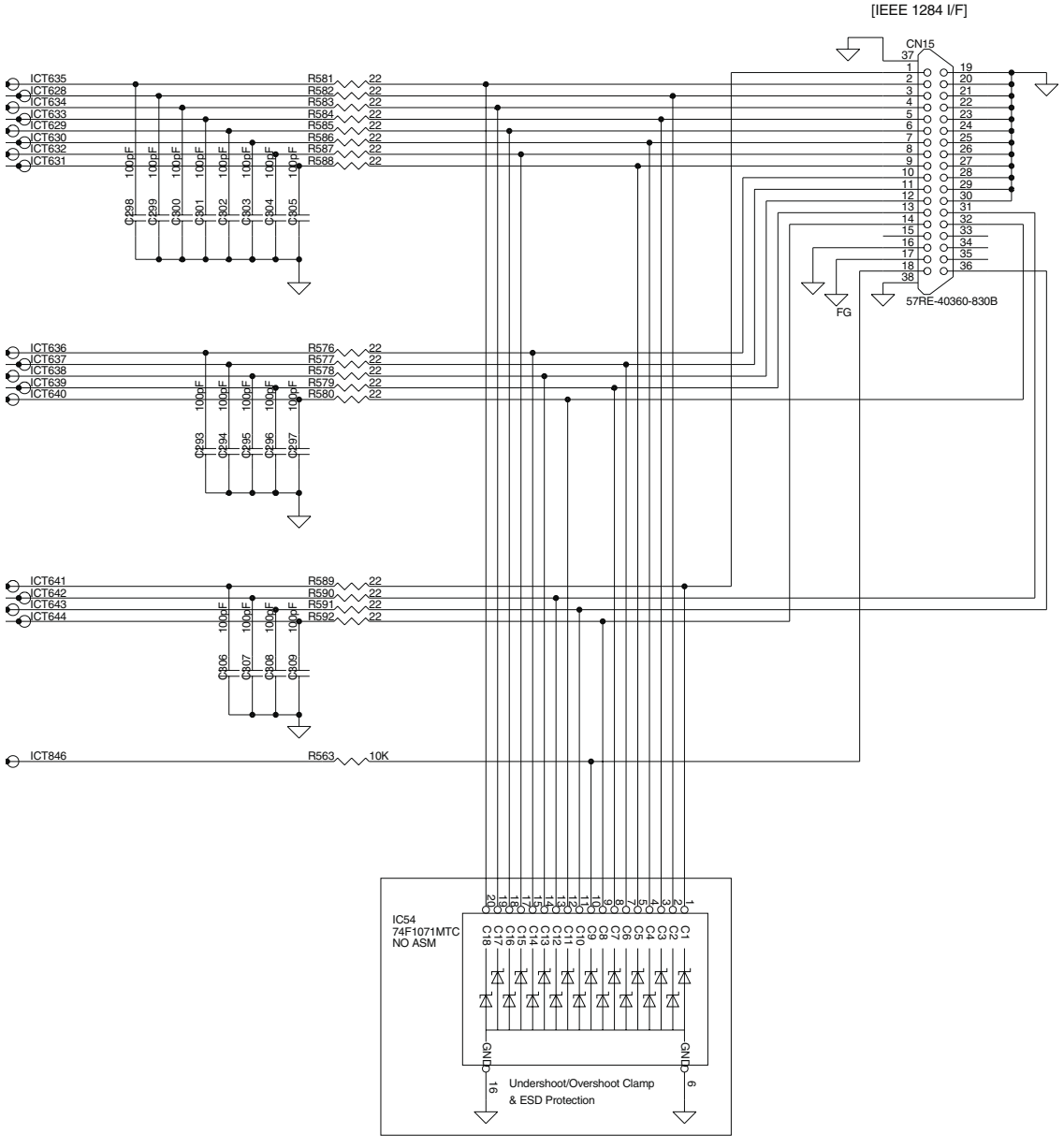
[IEEE 1284 I/F]
CN15
57RE-40360-830B
FG
ICT635
ICT628
ICT634
ICT633
ICT629
ICT630
ICT632
ICT631
R581 22
R582 22
R583 22
R584 22
R585 22
R586 22
R587 22
R588 22
C298 100pF
C299 100pF
C300 100pF
C801 100pF
C802 100pF
C803 100pF
C804 100pF
C805 100pF
ICT636
ICT637
ICT638
ICT639
ICT640
R576 22
R577 22
R578 22
R579 22
R580 22
C293 100pF
C294 100pF
C295 100pF
C296 100pF
C297 100pF
ICT641
ICT642
ICT643
ICT644
R589 22
R590 22
R591 22
R592 22
C806 100pF
C807 100pF
C808 100pF
C809 100pF
ICT846
R563 10K
IC54
74F1071MTC
NO ASM
GND
Undershoot/Overshoot Clamp
& ESD Protection

PRINT CONTROL PWB (RESET/COP CN)

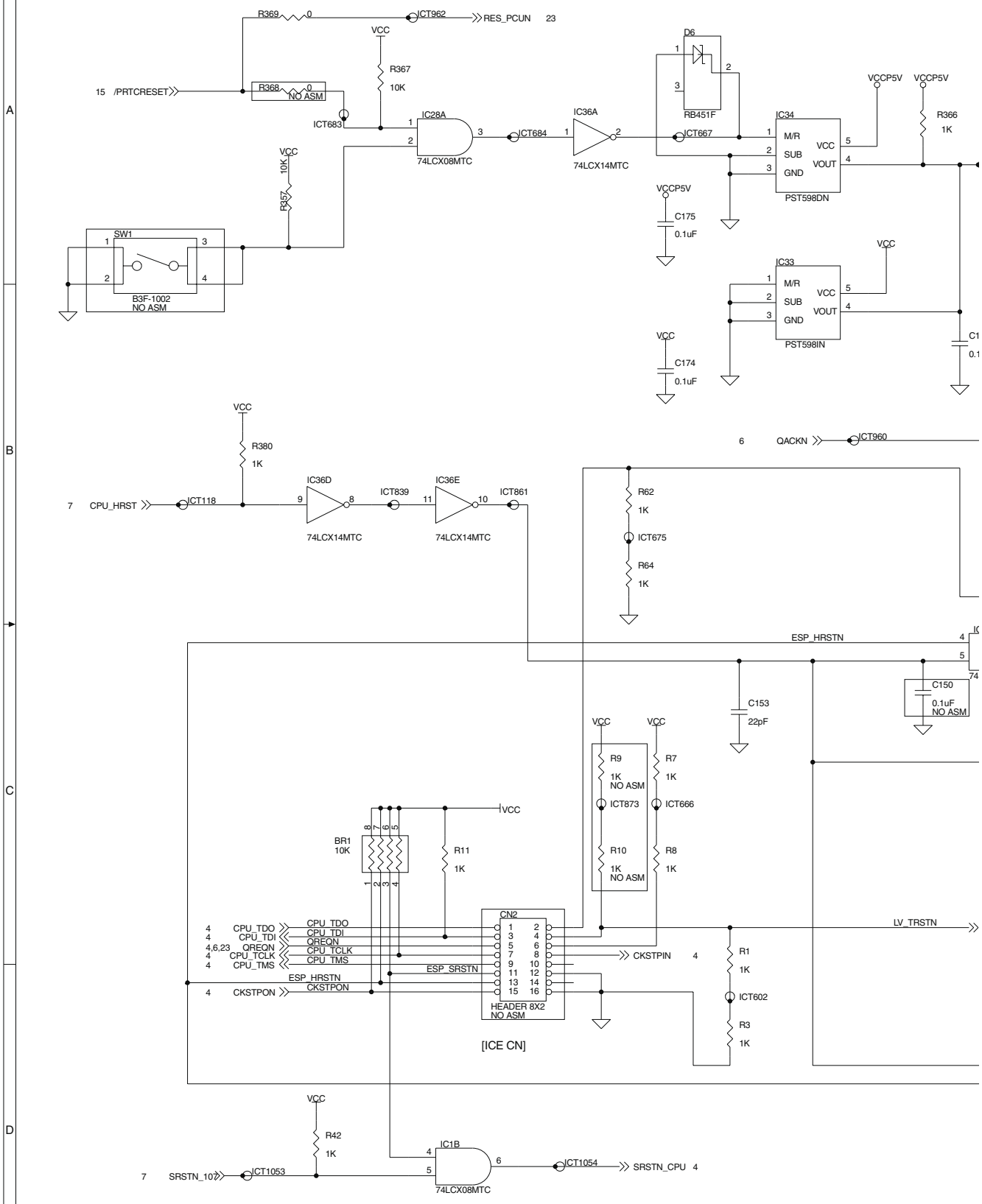

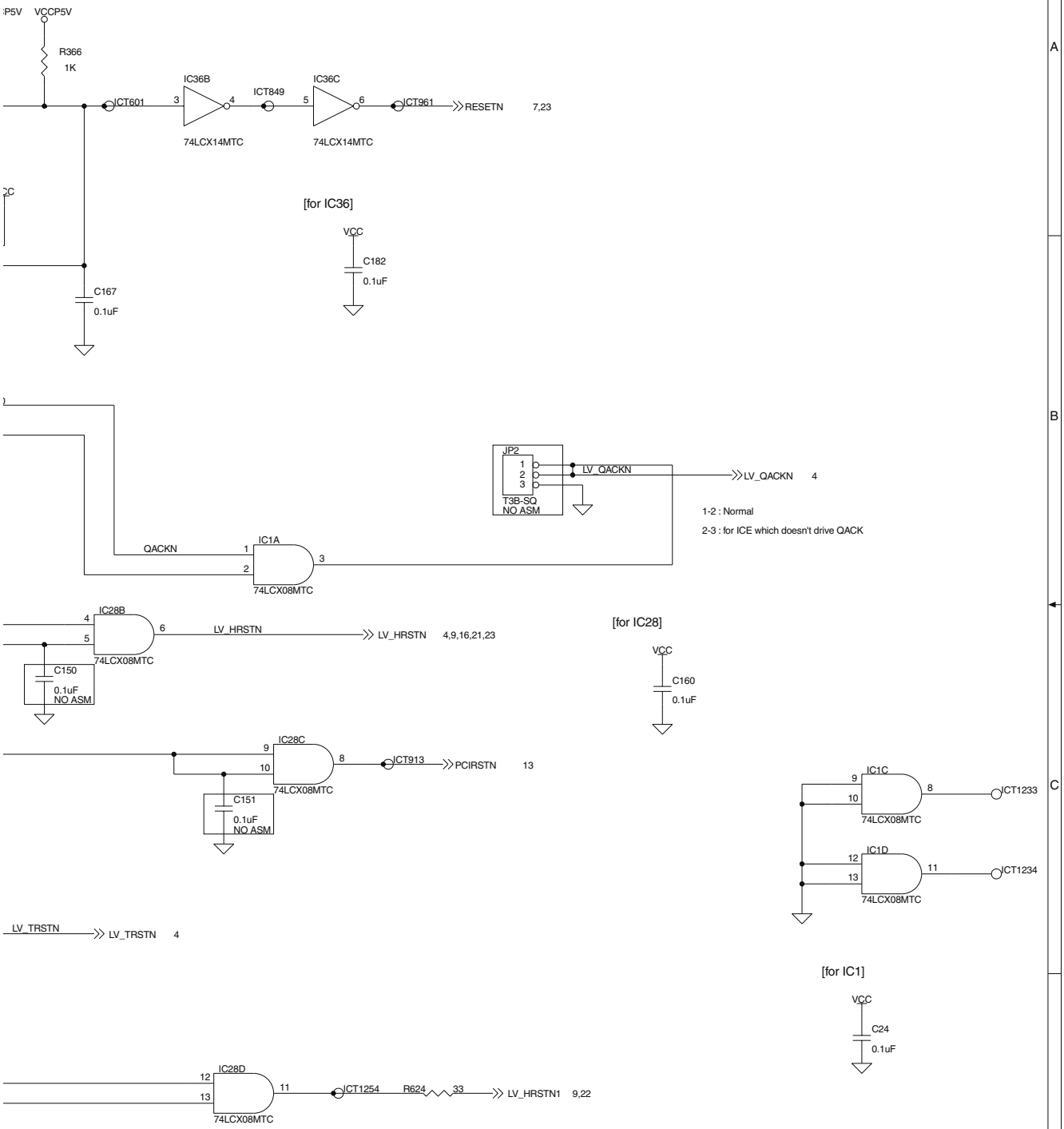
:P5V
VCCP5V
R366
1K
IC36B
IC36C
ICT601
ICT849
ICT961
RESETN
7,23
74LCX14MTC
74LCX14MTC
[for IC36]
VCC
C182
0.1uF
C167
0.1uF
JP2
LV_QACKN
LV_QACKN
4
T3B-SQ
NO ASM
1-2 : Normal
2-3 : for ICE which doesn't drive QACK
QACKN
IC1A
74LCX08MTC
IC28B
LV_HRSTN
LV_HRSTN
4,9,16,21,23
74LCX08MTC
C150
0.1uF
NO ASM
[for IC28]
VCC
C160
0.1uF
IC28C
ICT913
PCIRSTN
13
74LCX08MTC
C151
0.1uF
NO ASM
IC1C
ICT1233
74LCX08MTC
IC1D
ICT1234
74LCX08MTC
LV_TRSTN
LV_TRSTN
4
[for IC1]
VCC
C24
0.1uF
IC28D
ICT1254
R624
33
LV_HRSTN1
9,22
74LCX08MTC

PRINT CONTROL PWB (D8501A IO BUS BUFFER)

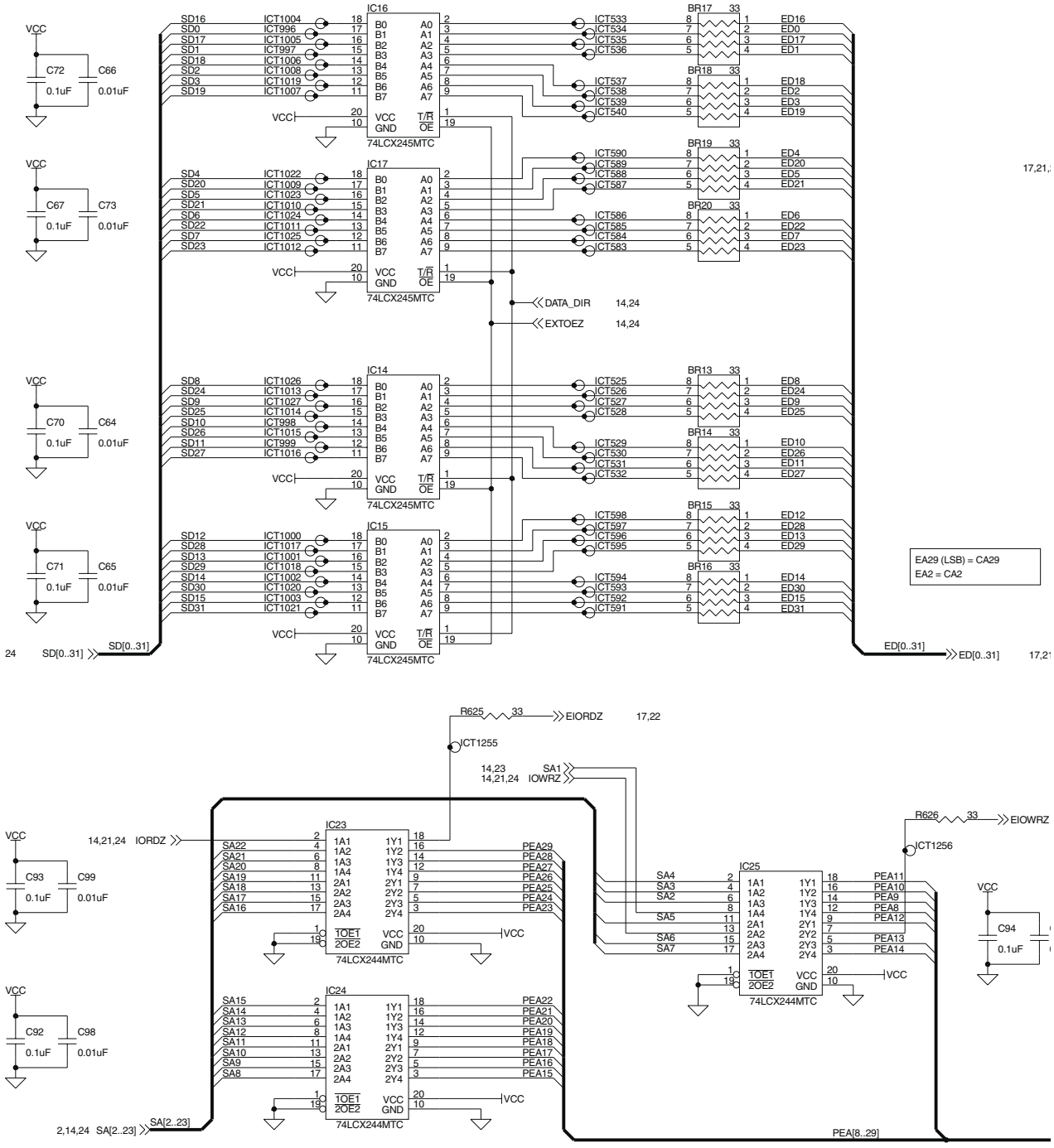

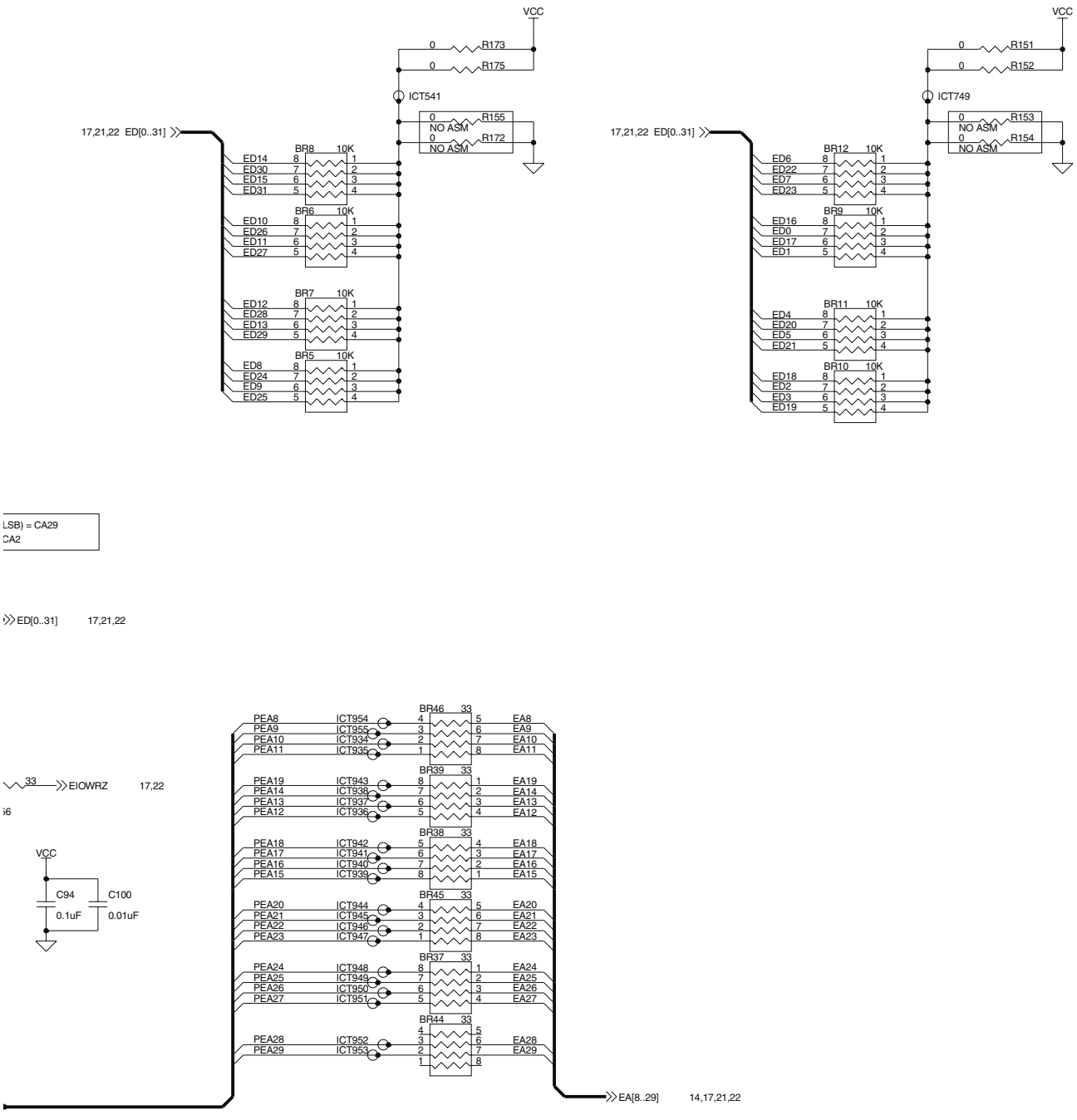
VCC
R173
R175
ICT541
R155
NO ASM
R172
NO ASM
17,21,22 ED[0..31]
BR8 10K
ED14 ED30 ED15 ED31
BR6 10K
ED10 ED26 ED11 ED27
BR7 10K
ED12 ED28 ED13 ED29
BR5 10K
ED8 ED24 ED9 ED25
VCC
R151
R152
ICT749
R153
NO ASM
R154
NO ASM
17,21,22 ED[0..31]
BR12 10K
ED6 ED22 ED7 ED23
BR9 10K
ED16 ED0 ED17 ED1
BR11 10K
ED4 ED20 ED5 ED21
BR10 10K
ED18 ED2 ED3 ED19
LSB) = CA29
CA2
ED[0..31] 17,21,22
33 EIOWRZ 17,22
VCC
C94 0.1uF
C100 0.01uF
BR46 33
PEA8 ICT954 EA8
PEA9 ICT955 EA9
PEA10 ICT934 EA10
PEA11 ICT935 EA11
BR39 33
PEA19 ICT943 EA19
PEA14 ICT938 EA14
PEA13 ICT937 EA13
PEA12 ICT936 EA12
BR38 33
PEA18 ICT942 EA18
PEA17 ICT941 EA17
PEA16 ICT940 EA16
PEA15 ICT939 EA15
BR45 33
PEA20 ICT944 EA20
PEA21 ICT945 EA21
PEA22 ICT946 EA22
PEA23 ICT947 EA23
BR37 33
PEA24 ICT948 EA24
PEA25 ICT949 EA25
PEA26 ICT950 EA26
PEA27 ICT951 EA27
BR44 33
PEA28 ICT952 EA28
PEA29 ICT953 EA29
EA[8..29] 14,17,21,22

PRINT CONTROL PWB (USB INTERFACE (OKI))

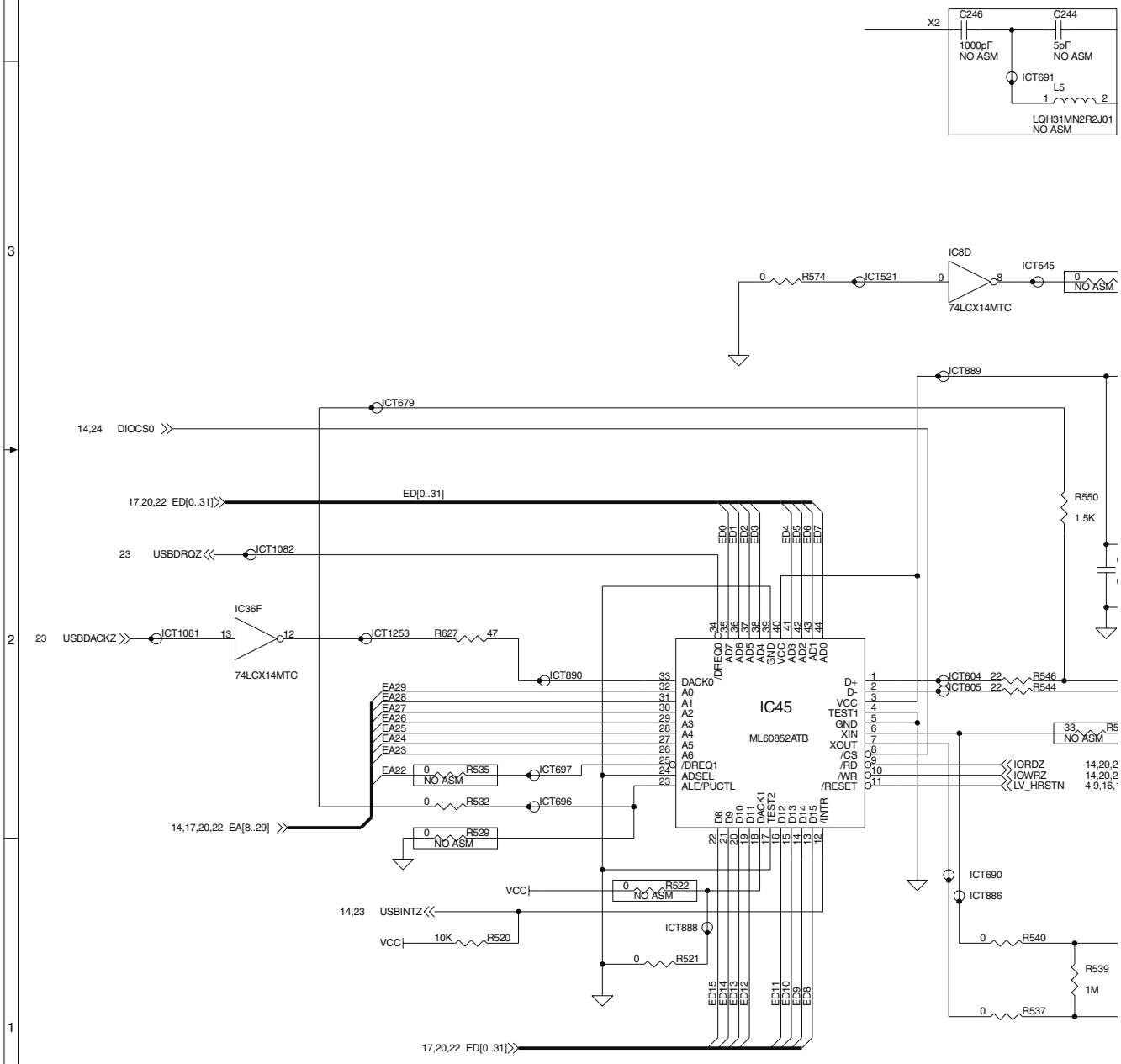

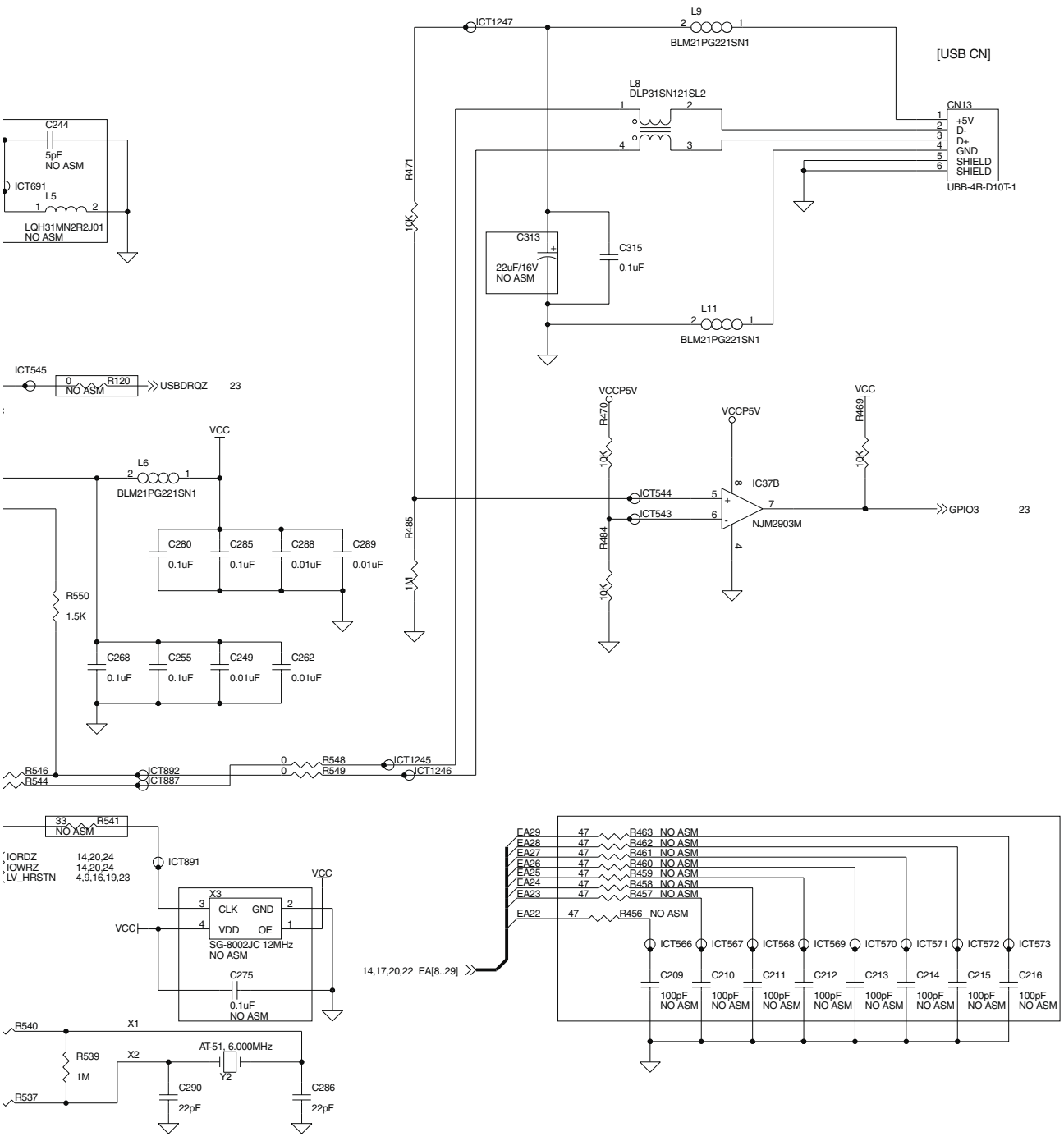
[USB CN]
ICT1247
L9
BLM21PG221SN1
L8
DLP31SN121SL2
CN13
+5V
D-
D+
GND
SHIELD
SHIELD
UBB-4R-D10T-1
C244
5pF
NO ASM
ICT691
L5
LQH31MN2R2J01
NO ASM
R471
10K
C313
22uF/16V
NO ASM
C315
0.1uF
L11
BLM21PG221SN1
ICT545
R120
NO ASM
USBDRQZ 23
VCC
L6
BLM21PG221SN1
C280
C285
C288
C289
0.1uF
0.1uF
0.01uF
0.01uF
R550
1.5K
C268
C255
C249
C262
0.1uF
0.1uF
0.01uF
0.01uF
R546
R544
ICT892
ICT887
R548
R549
ICT1245
ICT1246
VCCP5V
R470
10K
VCCP5V
VCC
R469
10K
ICT544
ICT543
IC37B
NJM2903M
GPIO3 23
R485
1M
R484
10K
33
R541
NO ASM
IORDZ 14,20,24
IOWRZ 14,20,24
LV_HRSTN 4,9,16,19,23
ICT891
X3
CLK GND
VDD OE
SG-8002JC 12MHz
NO ASM
C275
0.1uF
NO ASM
R540
X1
R539
1M
X2
AT-51, 6.000MHz
Y2
C290
22pF
C286
22pF
EA29 47 R463 NO ASM
EA28 47 R462 NO ASM
EA27 47 R461 NO ASM
EA26 47 R460 NO ASM
EA25 47 R459 NO ASM
EA24 47 R458 NO ASM
EA23 47 R457 NO ASM
EA22 47 R456 NO ASM
14,17,20,22 EA[8..29]
ICT566 ICT567 ICT568 ICT569 ICT570 ICT571 ICT572 ICT573
C209 C210 C211 C212 C213 C214 C215 C216
100pF NO ASM

PRINT CONTROL PWB (FLASH SDIMM)

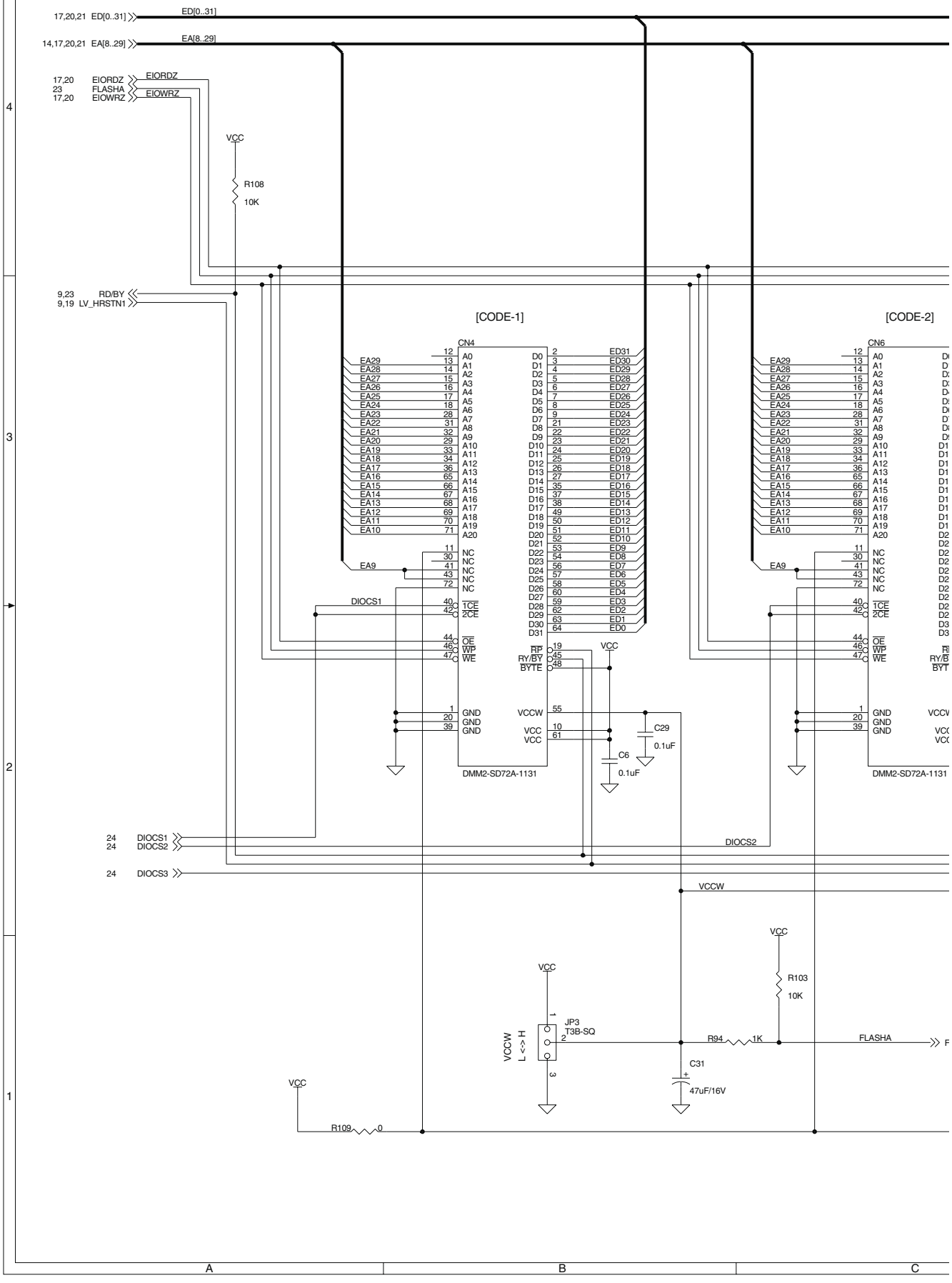

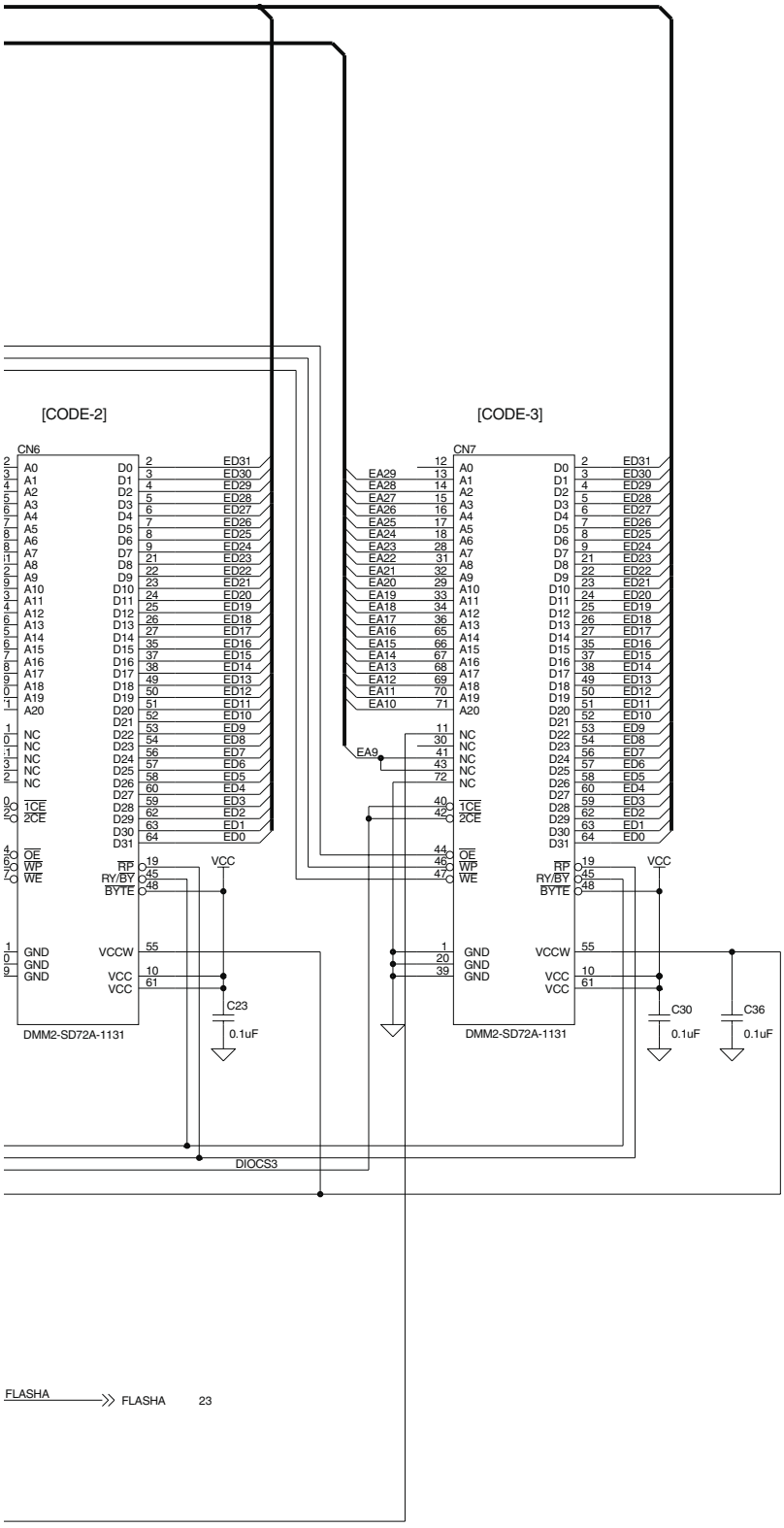
[CODE-2]
[CODE-3]
CN6
CN7
DMM2-SD72A-1131
DMM2-SD72A-1131
C23
C30
C36
0.1uF
0.1uF
0.1uF
VCC
VCCW
GND
DIOCS3
EA9
FLASHA
FLASHA 23

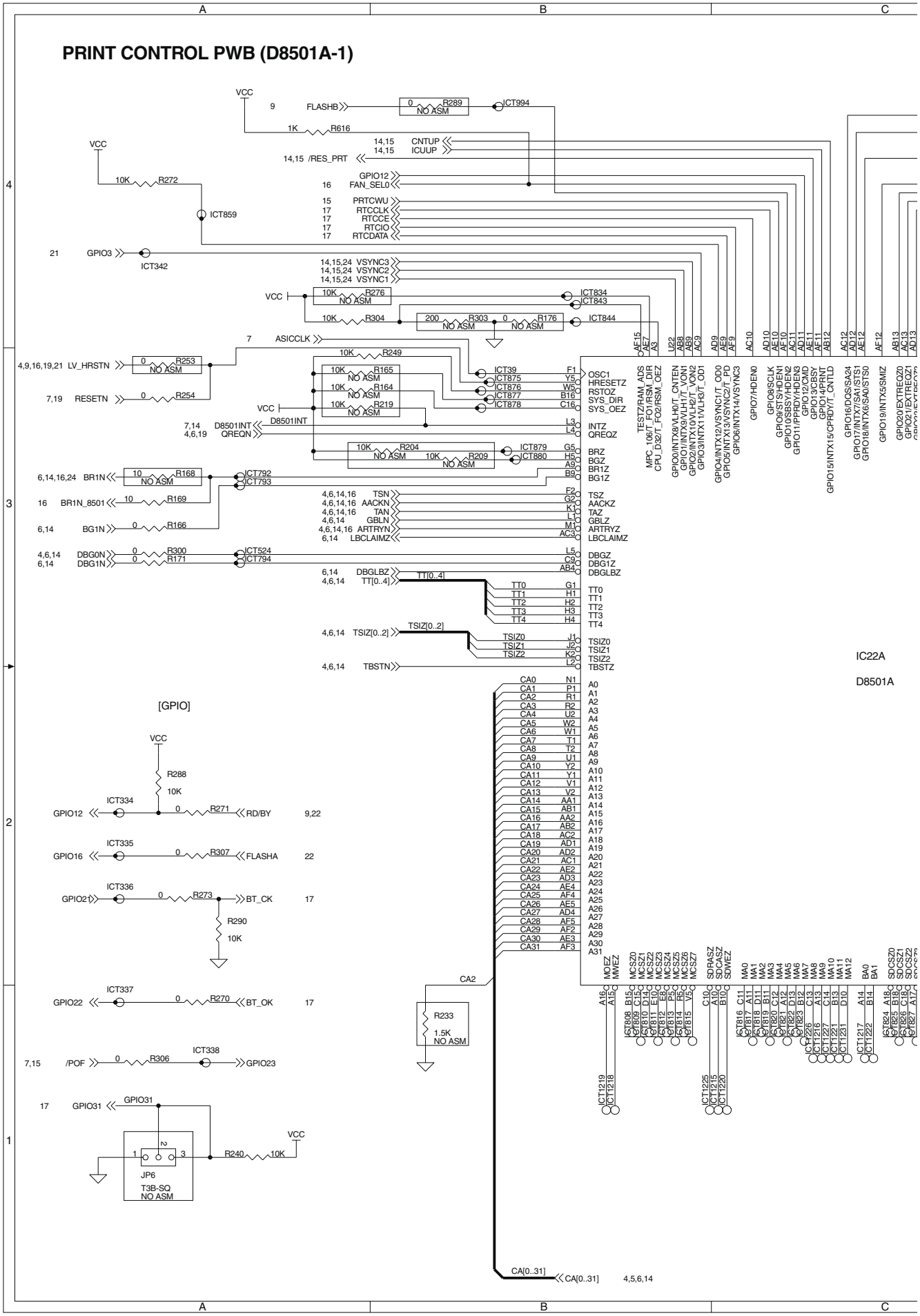
PRINT CONTROL PWB (D8501A-1)
IC22A
D8501A
[GPIO]
JP6
T3B-SQ
NO ASM

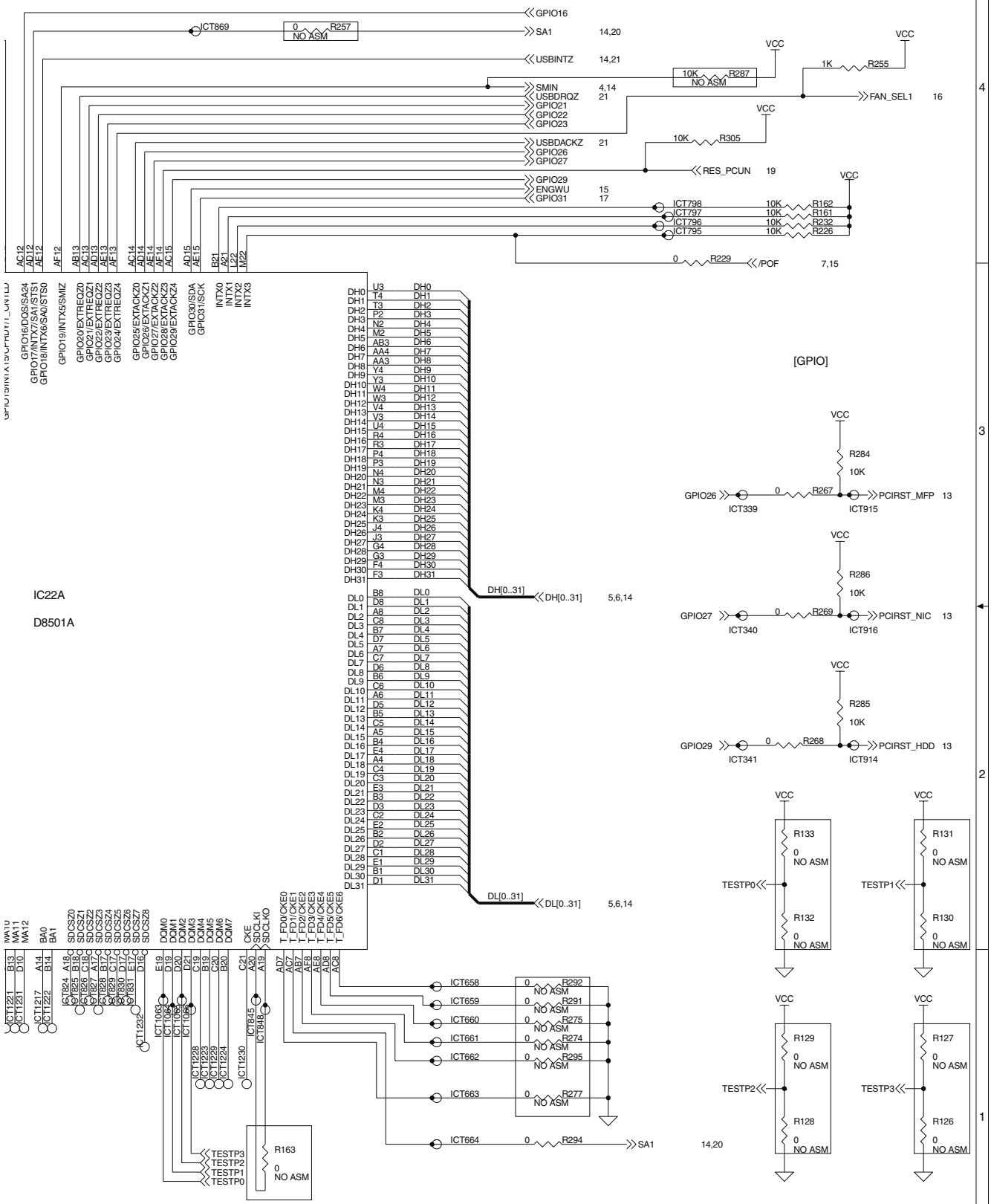
GPIO16
SA1 14,20
USBINTZ 14,21
SMIN 4,14
USBDRQZ 21
GPIO21
GPIO22
GPIO23
USBDACKZ 21
GPIO26
GPIO27
GPIO29
ENGWU 15
GPIO31 17
RES_PCUN 19
/POF 7,15
FAN_SEL1 16
VCC
[GPIO]
IC22A
D8501A
DH[0..31]
DL[0..31]
PCIRST_MFP 13
PCIRST_NIC 13
PCIRST_HDD 13
TESTP0
TESTP1
TESTP2
TESTP3
SDCLKI
SDCLKO
CKE
DQM0
DQM1
DQM2
DQM3
DQM4
DQM5
DQM6
DQM7
SDCSZ0
SDCSZ1
SDCSZ2
SDCSZ3
SDCSZ4
SDCSZ5
SDCSZ6
SDCSZ7
SDCSZ8
MA10
MA11
MA12
BA0
BA1

PRINT CONTROL PWB (D8501A-2)

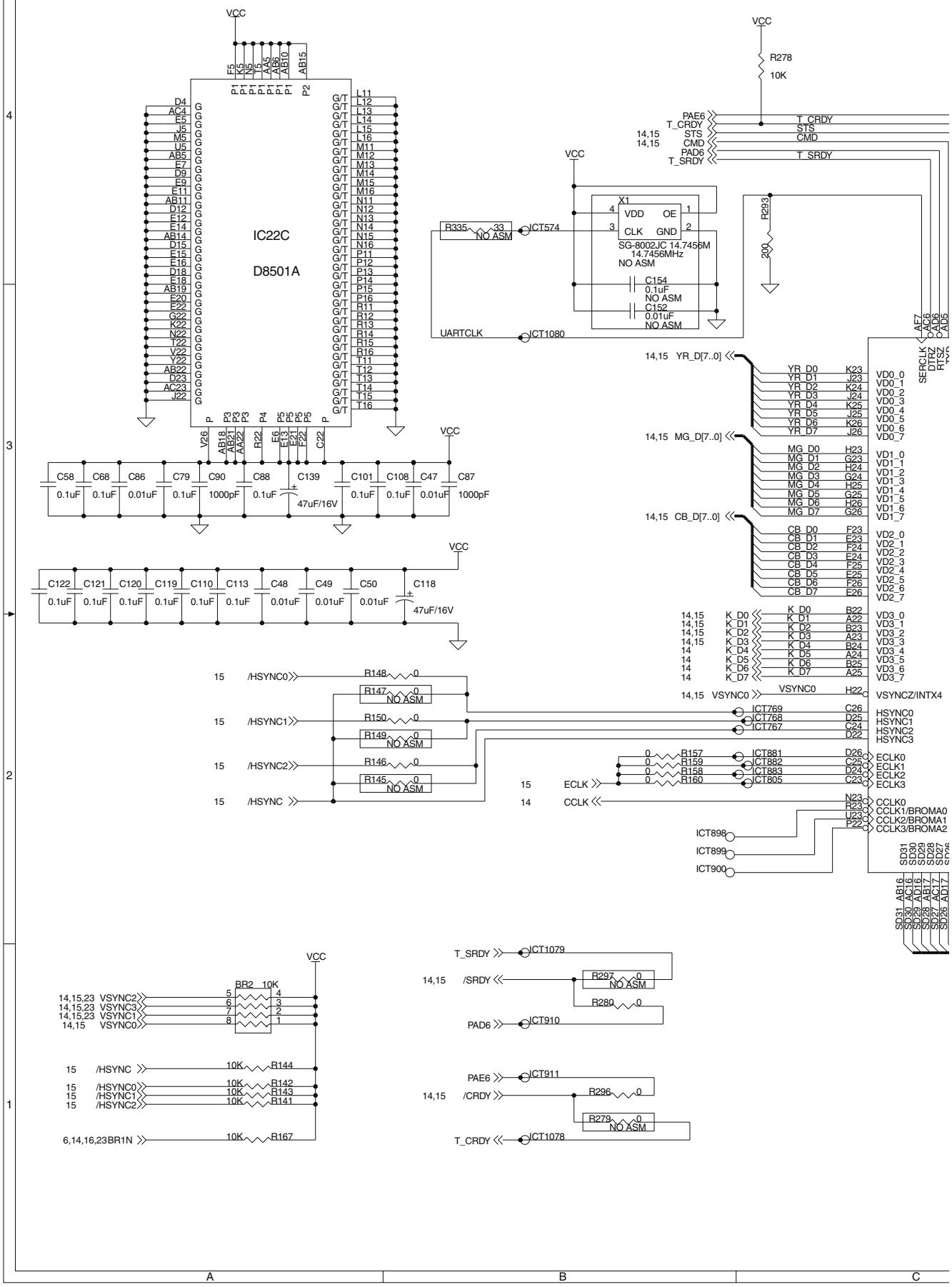

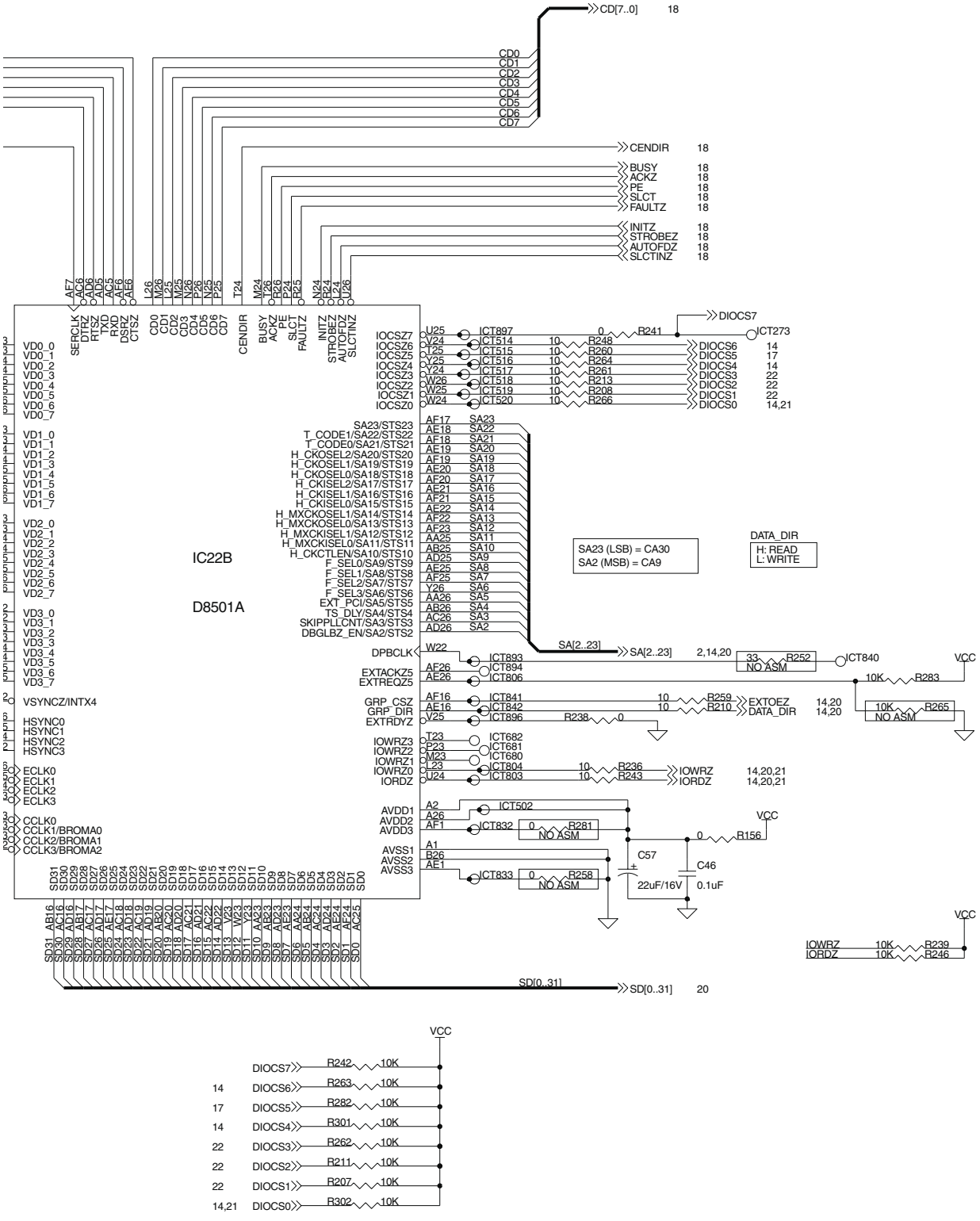
IC22B
D8501A
SA23 (LSB) = CA30
SA2 (MSB) = CA9
DATA_DIR
H: READ
L: WRITE
CD[7..0] 18
CENDIR 18
BUSY 18
ACKZ 18
PE 18
SLCT 18
FAULTZ 18
INITZ 18
STROBEZ 18
AUTOFDZ 18
SLCTINZ 18
DIOCS7
ICT273
SA[2..23]
SA[2..23] 2,14,20
SD[0..31] 20
IOWRZ 14,20,21
IORDZ 14,20,21
EXTOEZ 14,20
DATA_DIR 14,20
VCC
R241 0
R248 10
R260 10
R264 10
R261 10
R213 10
R208 10
R266 10
R252 33 NO ASM
R283 10K
R265 10K NO ASM
R259 10
R210 10
R238 0
R236 10
R243 10
R281 0 NO ASM
R156 0
R258 0 NO ASM
C57
C46
22uF/16V
0.1uF
R239 10K
R246 10K
R242 10K
R263 10K
R282 10K
R301 10K
R262 10K
R211 10K
R207 10K
R302 10K

PRINT CONTROL PWB

PARTS LAYOUT / 部品配置図

[PARTS SURFACE / 部品面**]**

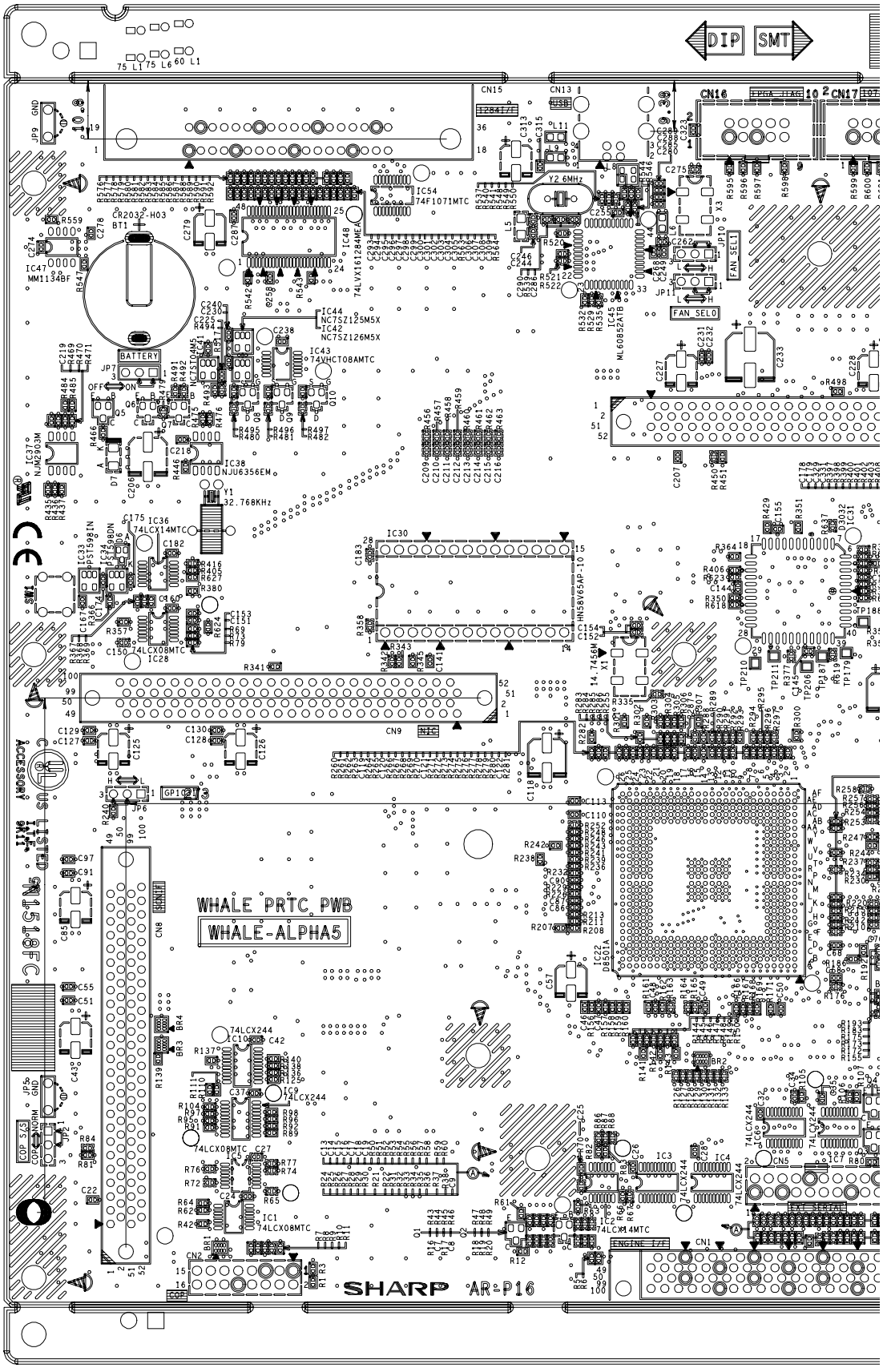

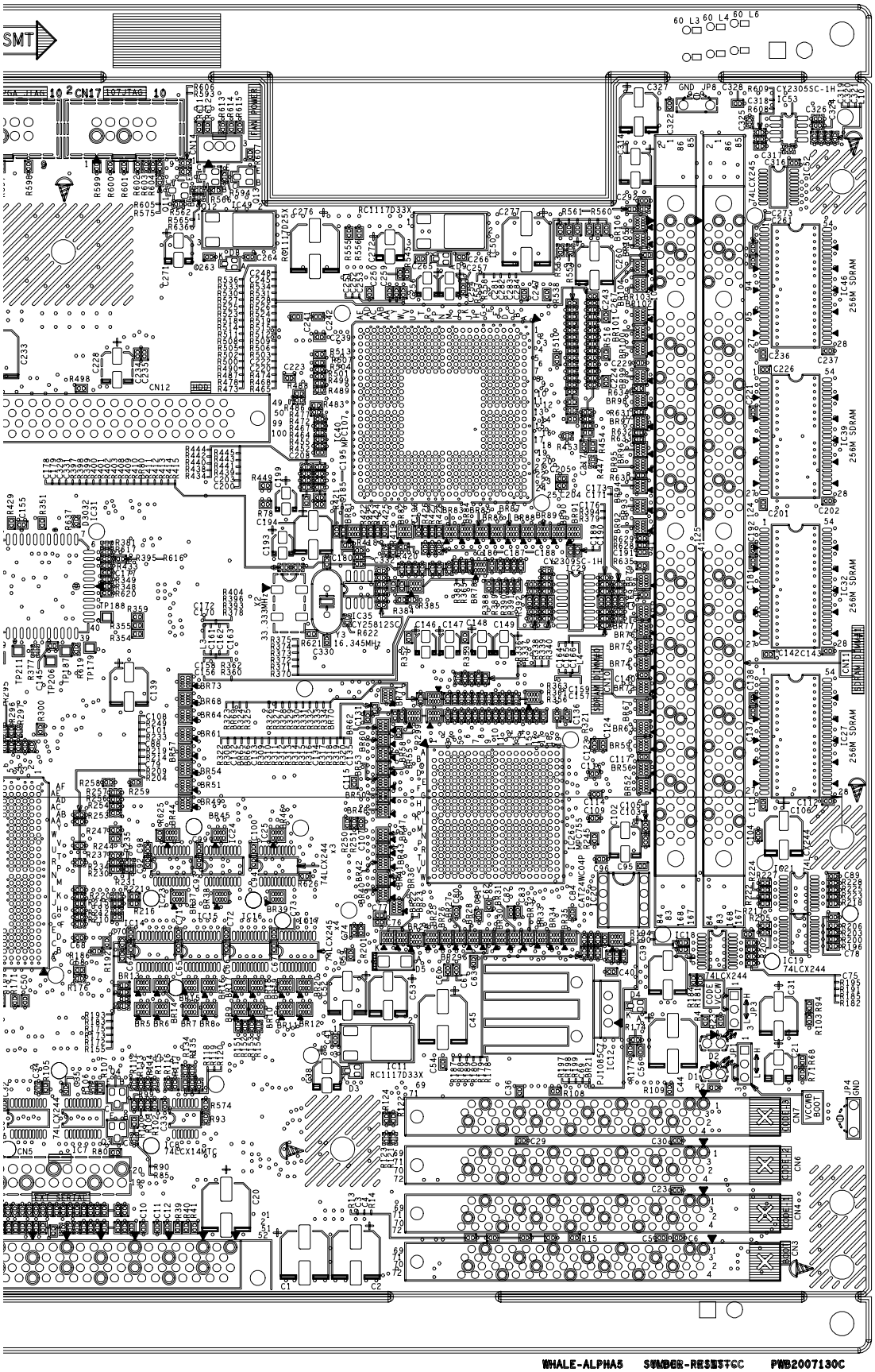
SMT
CN17
JTAG
POWER
CN12
CN5
CN6
CN7
CN3
CN4
IC46 256M SDRAM
IC39 256M SDRAM
IC32 256M SDRAM
IC27 256M SDRAM
IC11 RC1117D33X
IC35 ACY25812SC
IC30 CY2305SC-1H
IC19 74LCX244
IC7 74LCX14MTC
IC14 74LCX245
IC16 74LCX244
IC102 74LCX244
IC12 PJ1085CZ
Y2 33.333MHz
Y3 16.345MHz
JP3
JP4
VCCMB BOOT
WHALE-ALPHA5 SUMBER-RESIST-TOP PWB2007130C

L. MDMC PWB

MDMC PWB (CPU)

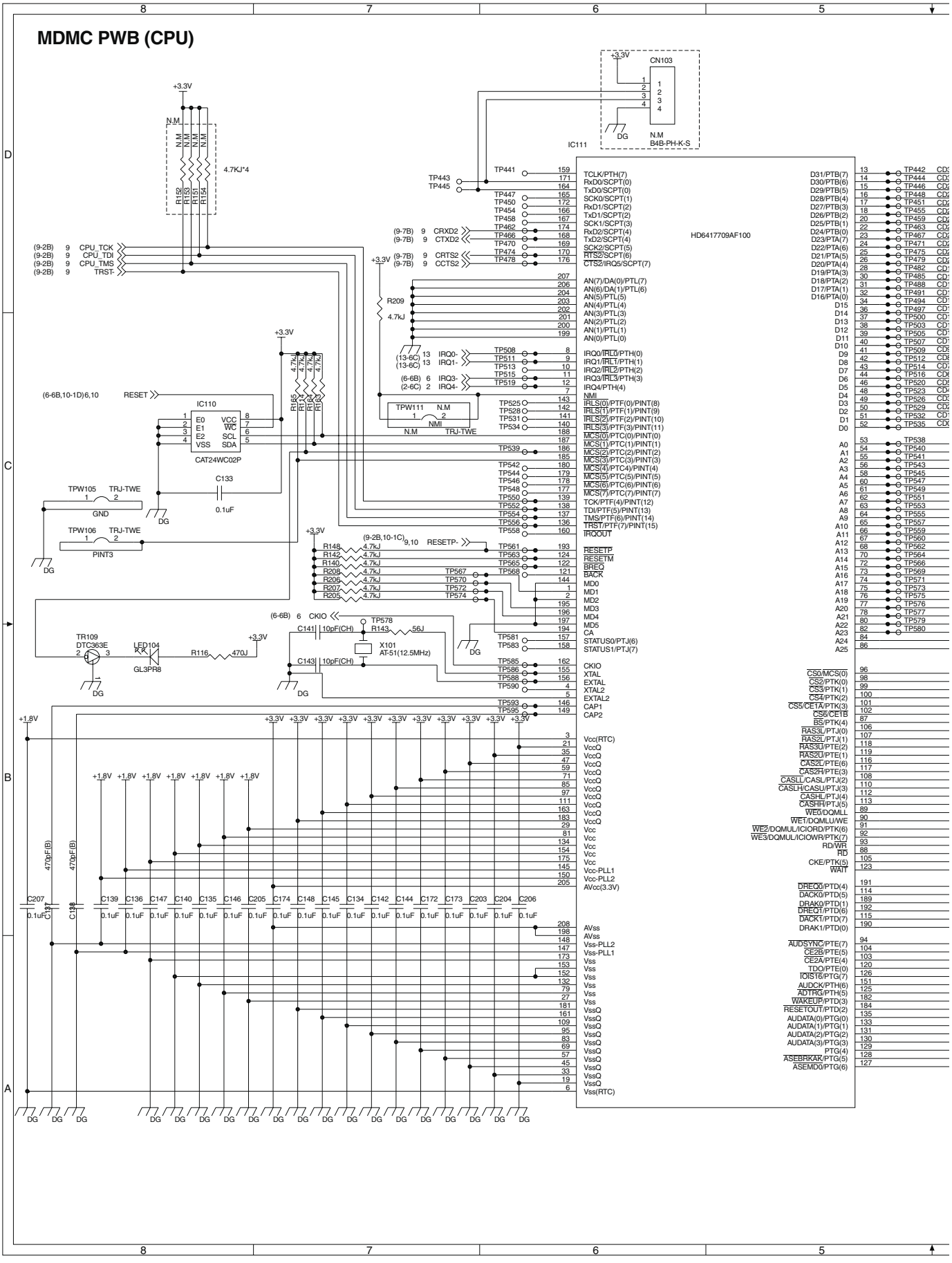

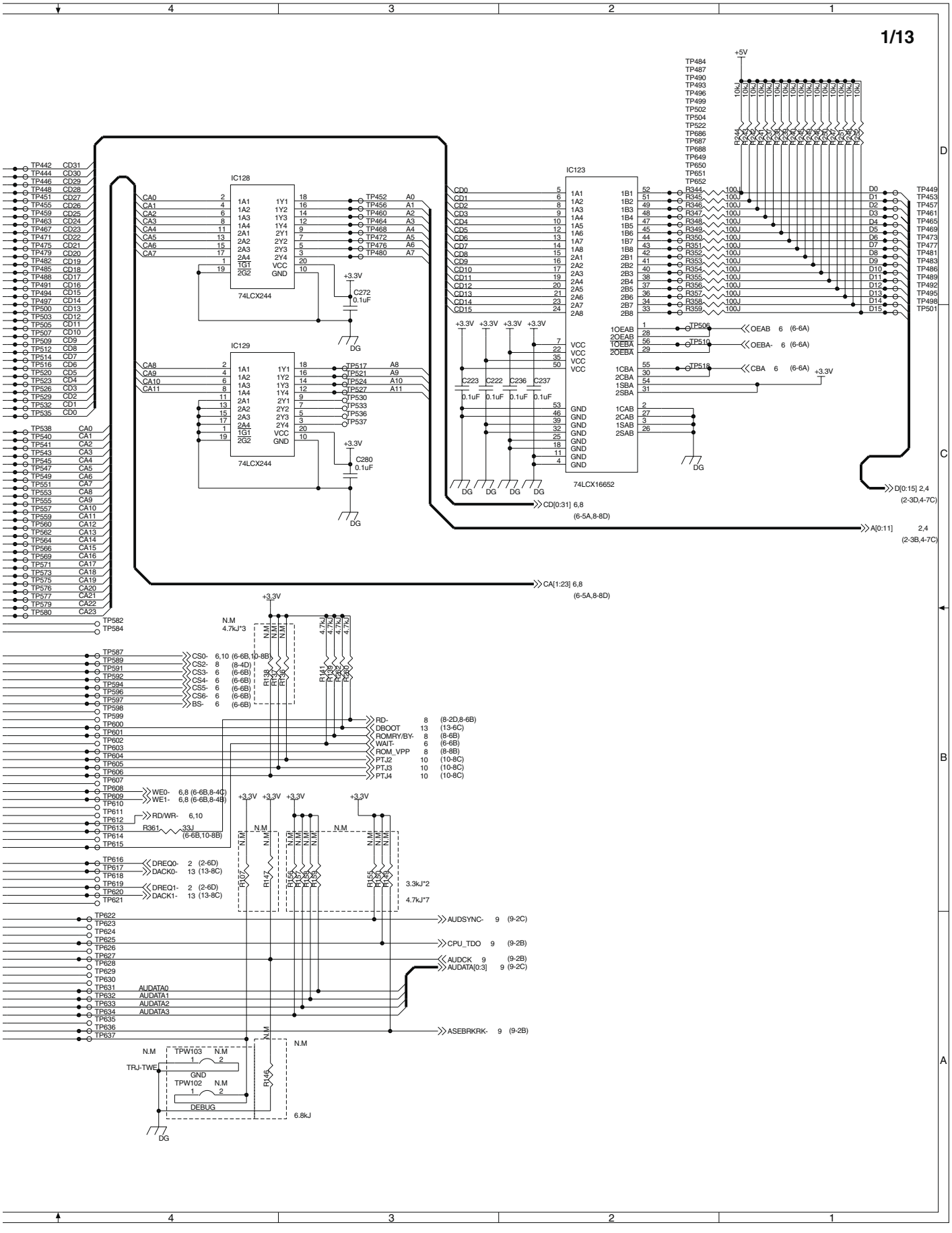
1/13
IC128
IC129
IC123
74LCX244
74LCX16652
+5V
+3.3V
DG
CA[1:23] 6,8
(6-5A,8-8D)
CD[0:31] 6,8
(6-5A,8-8D)
A[0:11] 2,4
(2-3B,4-7C)
D[0:15] 2,4
(2-3D,4-7C)
OEAB 6 (6-6A)
OEBA- 6 (6-6A)
CBA 6 (6-6A)
RD- 8 (8-2D,8-6B)
DBOOT 13 (13-6C)
ROMRY/BY- 8 (8-6B)
WAIT- 6 (6-6B)
ROM_VPP 8 (8-8B)
PTJ2 10 (10-8C)
PTJ3 10 (10-8C)
PTJ4 10 (10-8C)
AUDSYNC- 9 (9-2C)
CPU_TDO 9 (9-2B)
AUDCK 9 (9-2B)
AUDATA[0:3] 9 (9-2C)
ASEBRKRK- 9 (9-2B)
TPW103
TPW102
TRJ-TWE
DEBUG
6.8kJ
3.3kJ*2
4.7kJ*7
4.7kJ*3

MDMC PWB (JBIG)

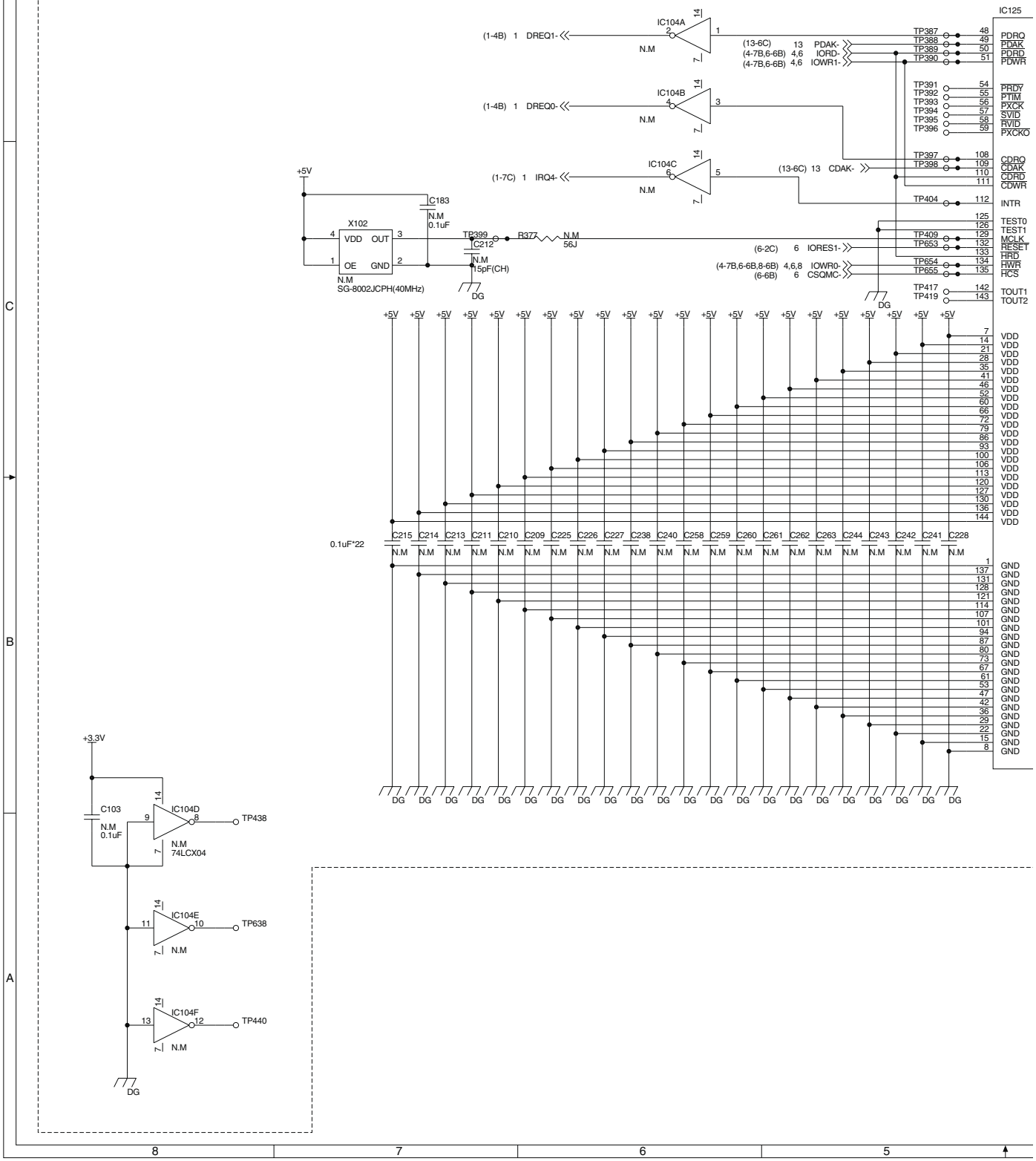

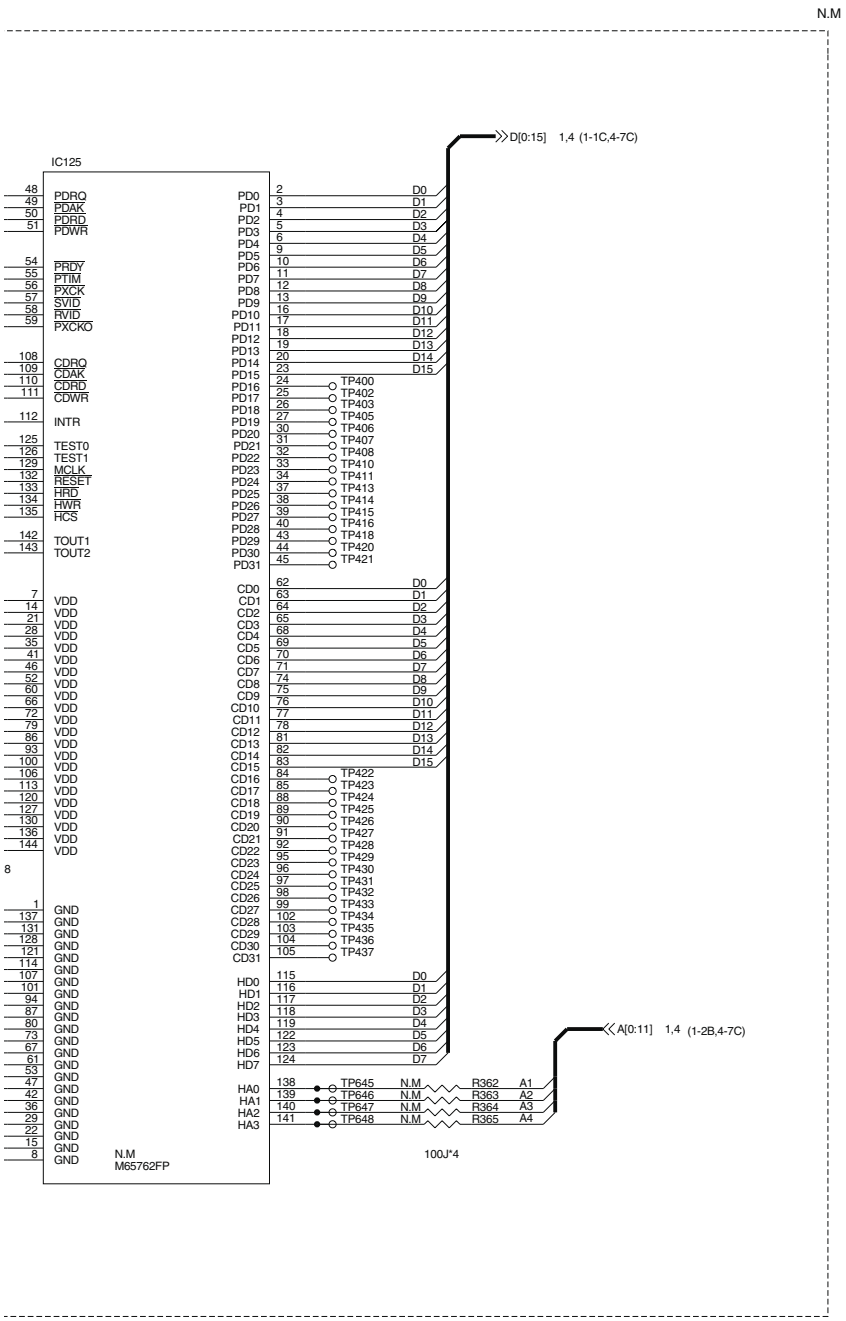
N.M
IC125
D[0:15] 1,4 (1-1C,4-7C)
A[0:11] 1,4 (1-2B,4-7C)
PDRQ
PDAK
PDRD
PDWR
PRDY
PTIM
PXCK
SVID
RVID
PXCKO
CDRQ
CDAK
CDRD
CDWR
INTR
TEST0
TEST1
MCLK
RESET
HRD
HWR
HCS
TOUT1
TOUT2
VDD
GND
PD0 PD1 PD2 PD3 PD4 PD5 PD6 PD7 PD8 PD9 PD10 PD11 PD12 PD13 PD14 PD15
PD16 PD17 PD18 PD19 PD20 PD21 PD22 PD23 PD24 PD25 PD26 PD27 PD28 PD29 PD30 PD31
CD0 CD1 CD2 CD3 CD4 CD5 CD6 CD7 CD8 CD9 CD10 CD11 CD12 CD13 CD14 CD15
CD16 CD17 CD18 CD19 CD20 CD21 CD22 CD23 CD24 CD25 CD26 CD27 CD28 CD29 CD30 CD31
HD0 HD1 HD2 HD3 HD4 HD5 HD6 HD7
HA0 HA1 HA2 HA3
TP400 TP402 TP403 TP405 TP406 TP407 TP408 TP410 TP411 TP413 TP414 TP415 TP416 TP418 TP420 TP421
TP422 TP423 TP424 TP425 TP426 TP427 TP428 TP429 TP430 TP431 TP432 TP433 TP434 TP435 TP436 TP437
TP645 TP646 TP647 TP648
N.M
R362 R363 R364 R365
A1 A2 A3 A4
100J*4
N.M
M65762FP

MDMC PWB (MODEM (AFE))

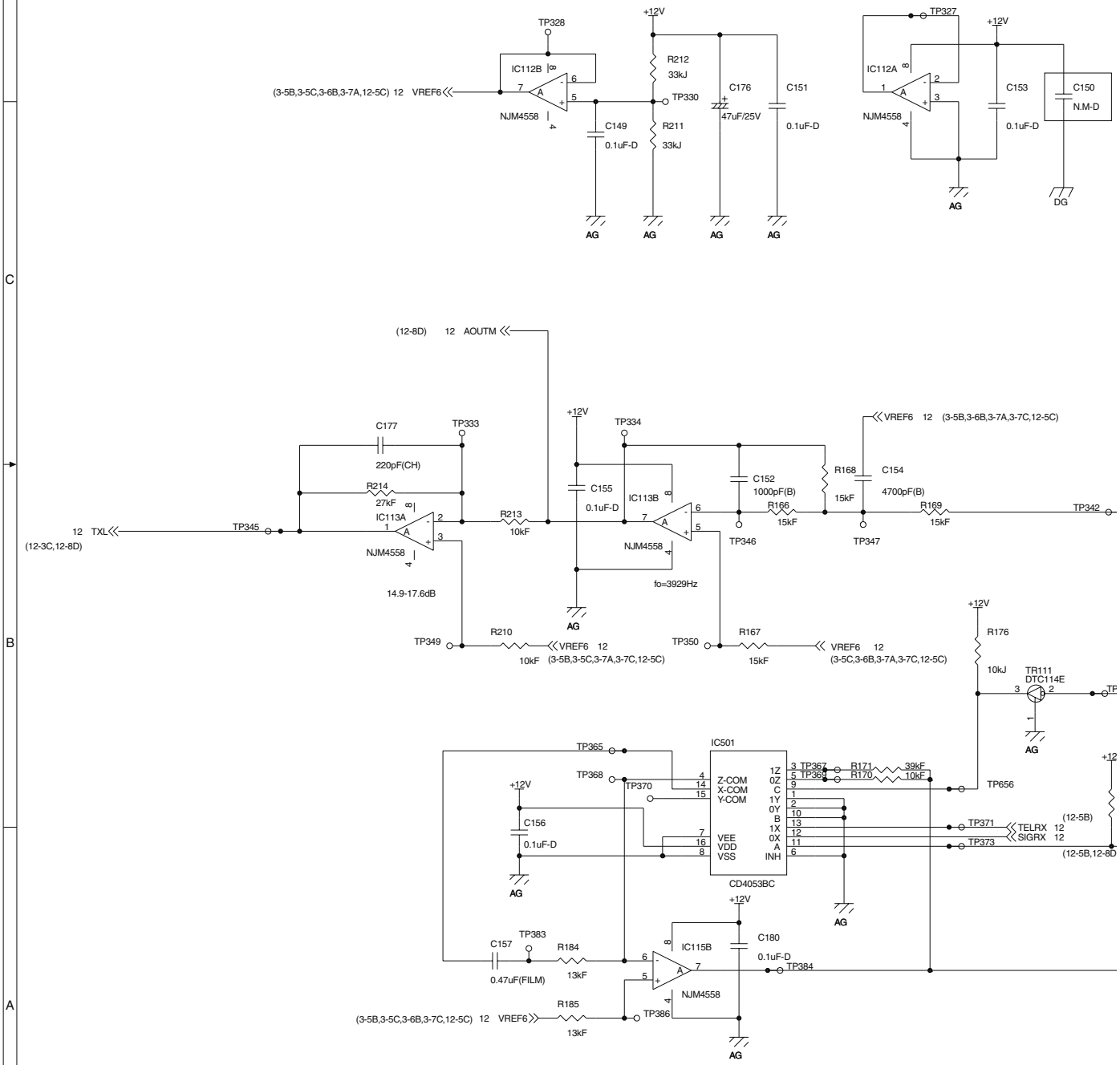

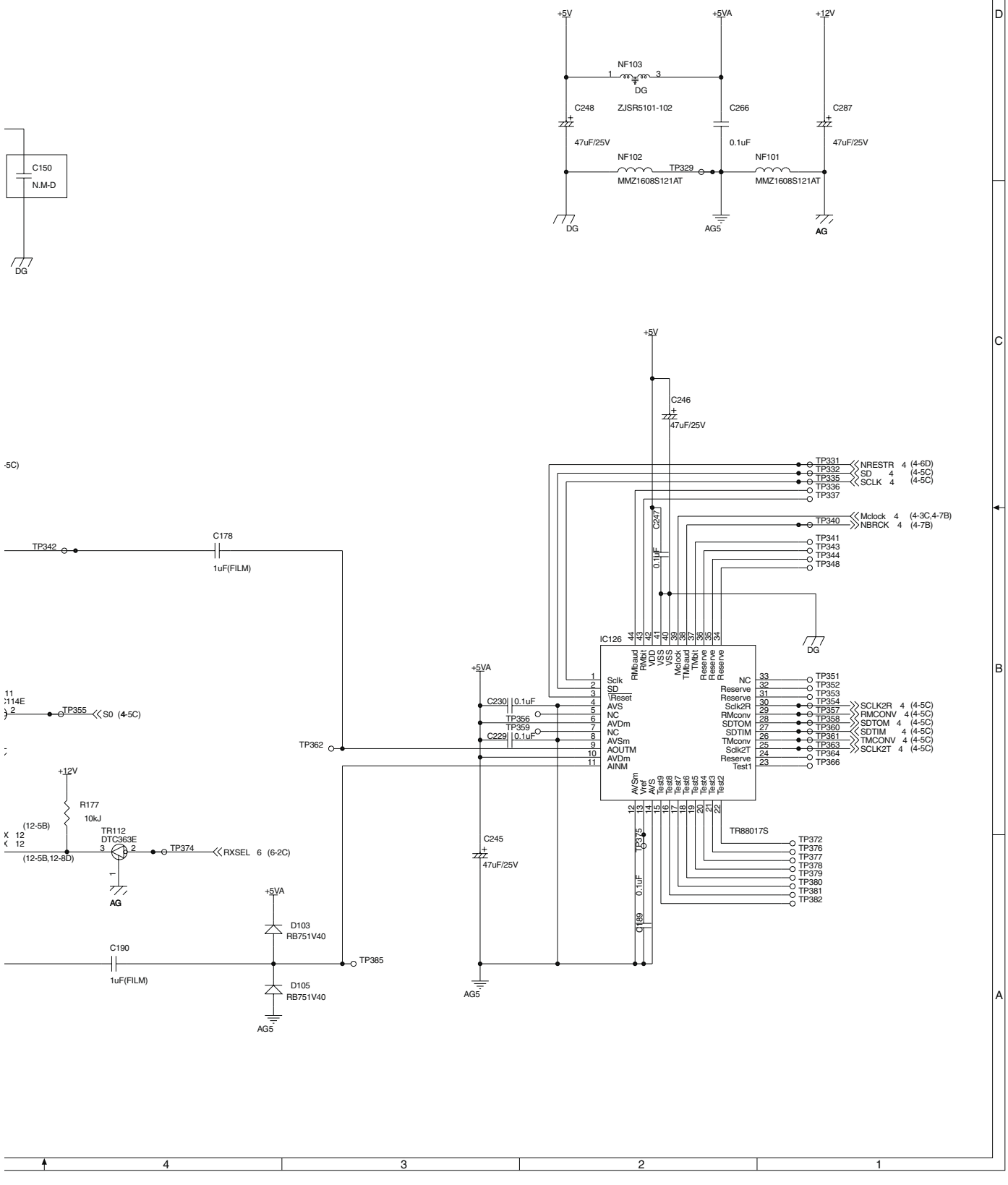
+5V
+5VA
+12V
NF103
DG
C248
ZJSR5101-102
C266
C287
47uF/25V
0.1uF
47uF/25V
NF102
TP329
NF101
MMZ1608S121AT
MMZ1608S121AT
DG
AG5
AG
C150
N.M-D
DG
+5V
C246
47uF/25V
TP331
TP332
TP335
TP336
TP337
NRESTR 4 (4-6D)
SD 4 (4-5C)
SCLK 4 (4-5C)
C247
0.1uF
TP340
TP341
TP343
TP344
TP348
Mclock 4 (4-3C,4-7B)
NBRCK 4 (4-7B)
DG
IC126
Sclk
SD
/Reset
AVS
NC
AVDm
NC
AVSm
AOUTM
AVDm
AINM
NC
Reserve
Reserve
Sclk2R
RMconv
SDTOM
SDTIM
TMconv
Sclk2T
Reserve
Test1
TP351
TP352
TP353
TP354
TP357
TP358
TP360
TP361
TP363
TP364
TP366
SCLK2R 4 (4-5C)
RMCONV 4 (4-5C)
SDTOM 4 (4-5C)
SDTIM 4 (4-5C)
TMCONV 4 (4-5C)
SCLK2T 4 (4-5C)
TR88017S
TP372
TP376
TP377
TP378
TP379
TP380
TP381
TP382
TP375
C189
0.1uF
TP342
C178
1uF(FILM)
TP362
+5VA
C230
0.1uF
TP356
TP359
C229
0.1uF
C245
47uF/25V
AG5
TP355
S0 (4-5C)
+12V
R177
10kJ
(12-5B)
TR112
DTC363E
TP374
RXSEL 6 (6-2C)
(12-5B,12-8D)
AG
+5VA
D103
RB751V40
C190
1uF(FILM)
TP385
D105
RB751V40
AG5

MDMC PWB (MODEM (DSP))

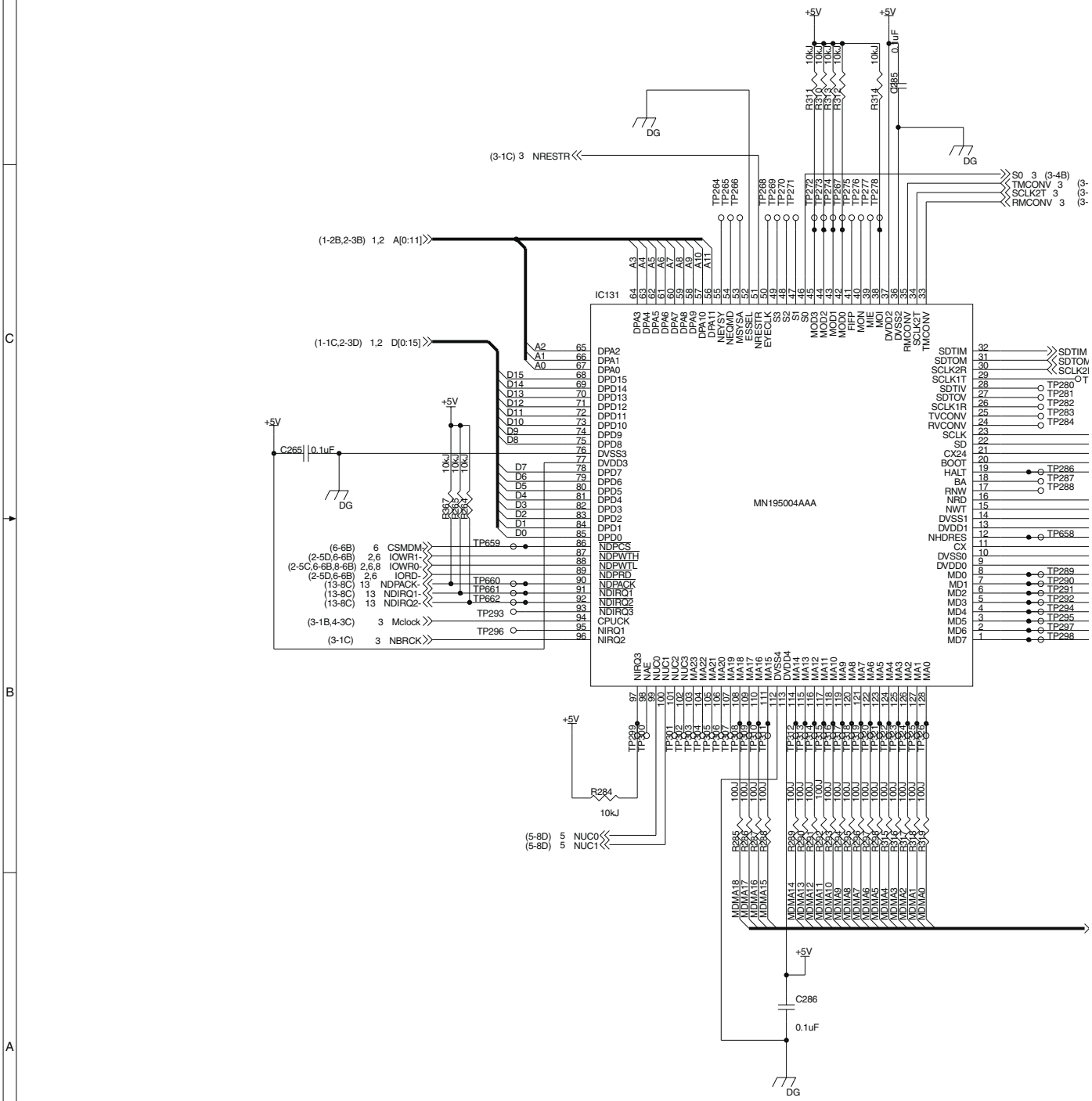

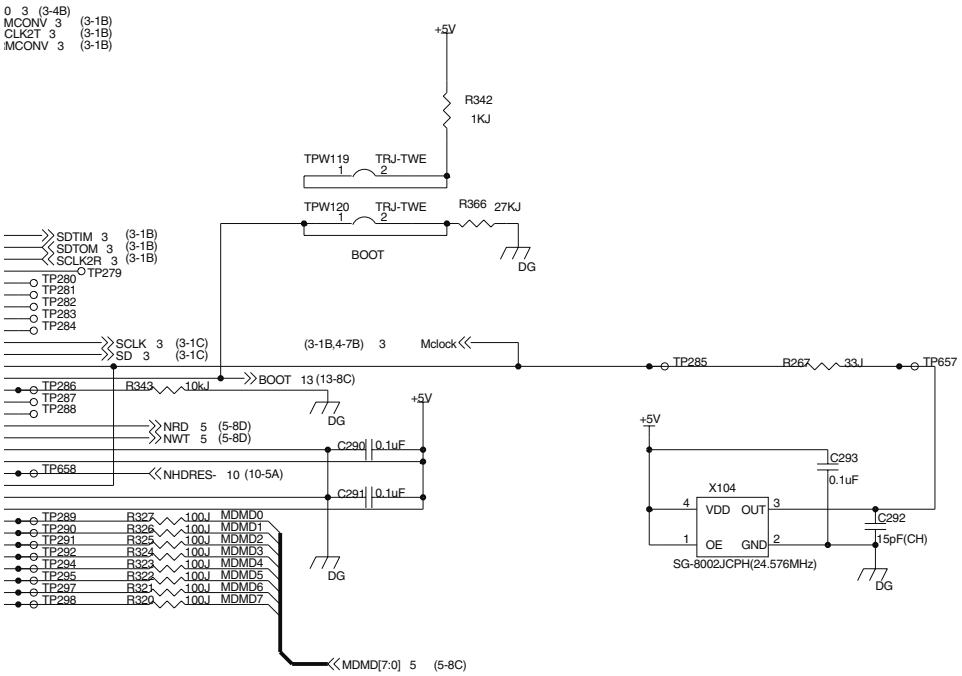

MDMA[0:18] 5 (5-8D)

MDMC PWB (MODEM (ROM, RAM))

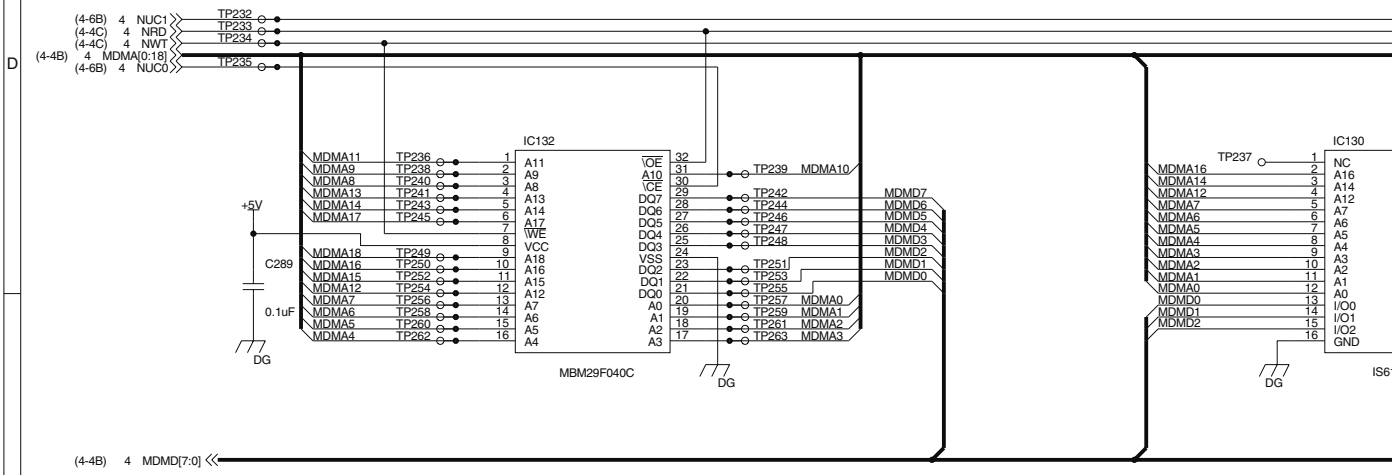

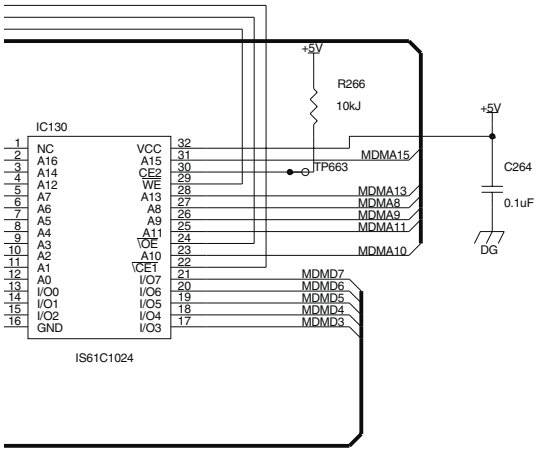
+5V
R266
10kJ
+5V
IC130
NC
A16
A14
A12
A7
A6
A5
A4
A3
A2
A1
A0
I/O0
I/O1
I/O2
GND
VCC
A15
CE2
WE
A13
A8
A9
A11
\OE
A10
\CE1
I/O7
I/O6
I/O5
I/O4
I/O3
MDMA15
TP663
MDMA13
MDMA8
MDMA9
MDMA11
MDMA10
C264
0.1uF
DG
MDMD7
MDMD6
MDMD5
MDMD4
MDMD3
IS61C1024

MDMC PWB (FAX G/A)

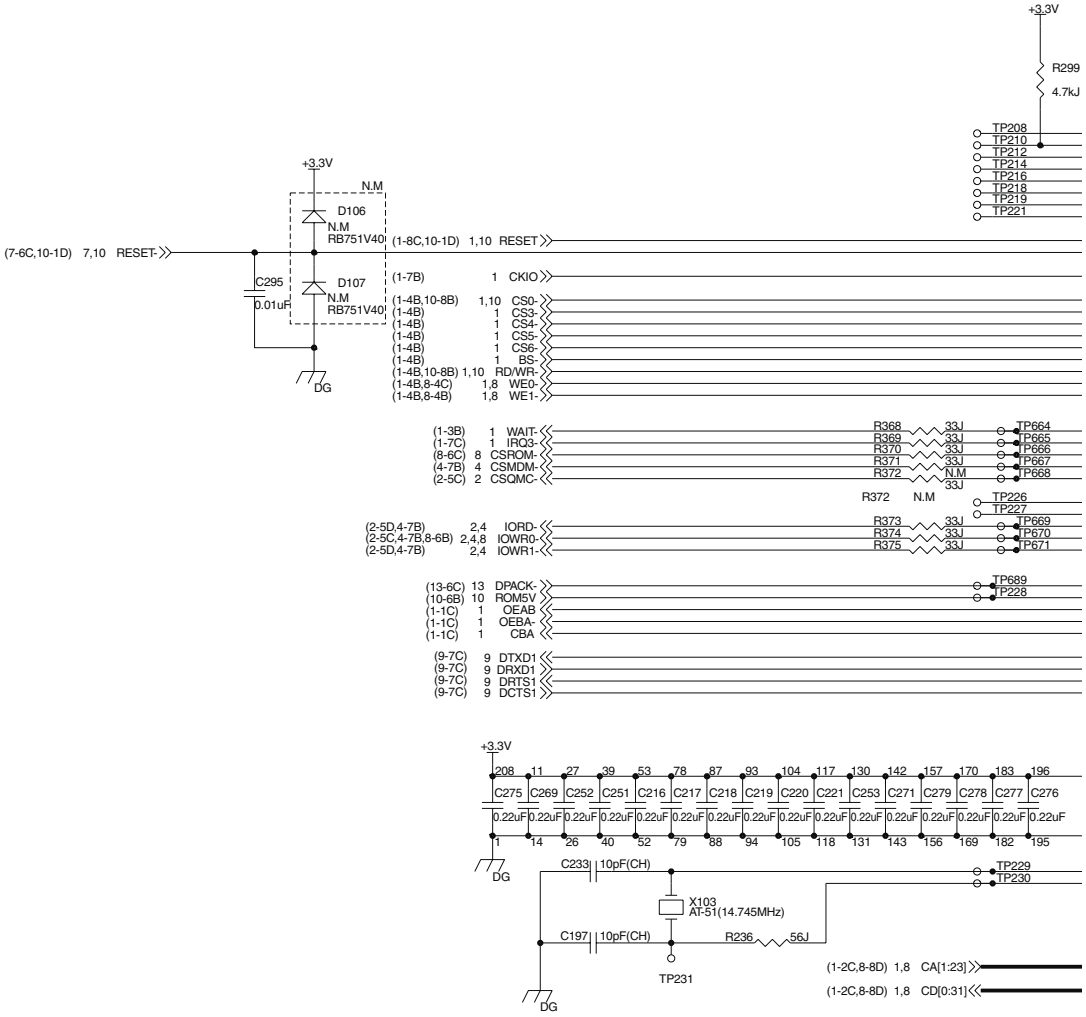

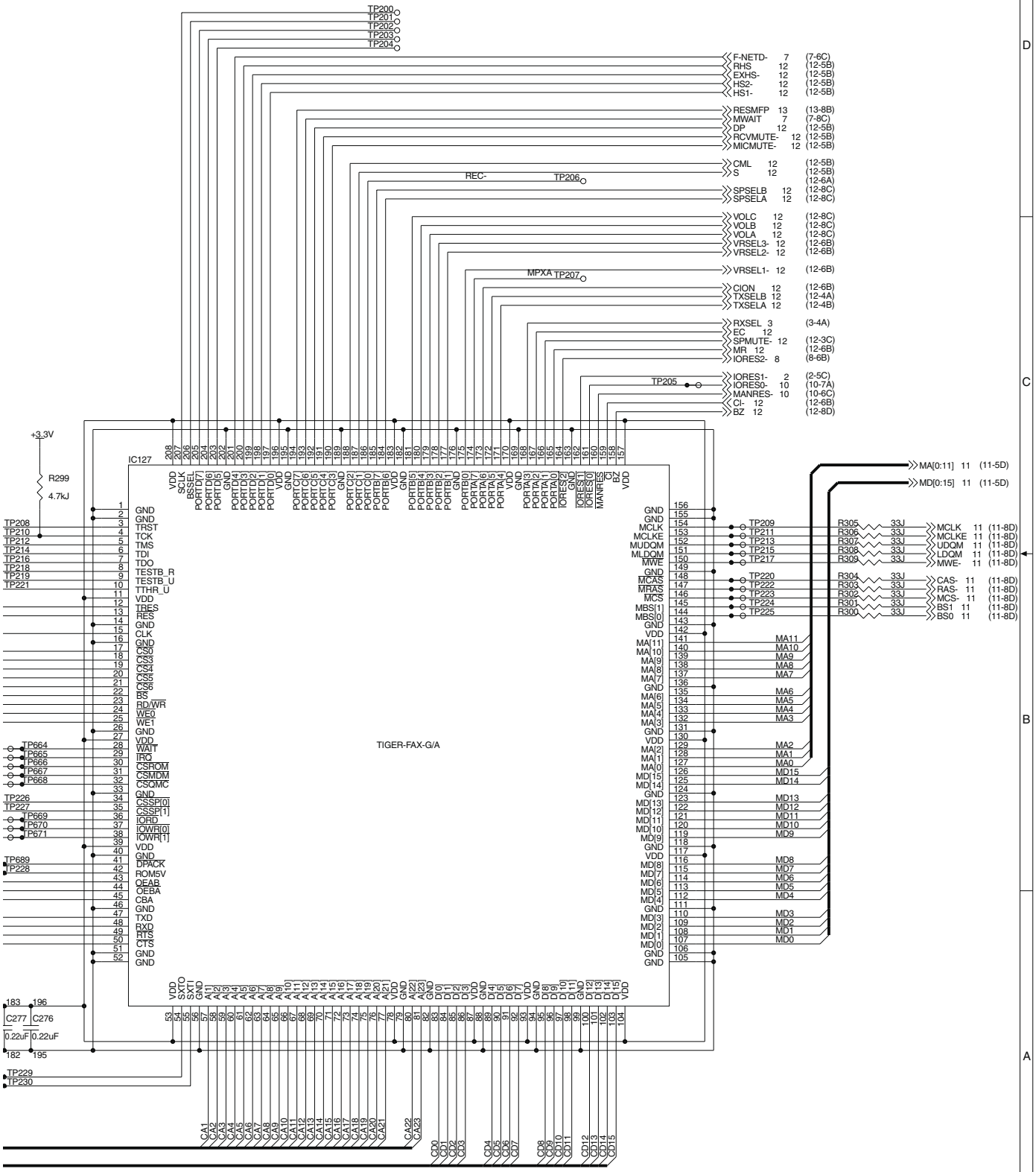
IC127
TIGER-FAX-G/A
+3.3V
R299
4.7kJ
C277
C276
0.22uF
0.22uF
TP200
TP201
TP202
TP203
TP204
TP205
TP206
TP207
REC-
MPXA
F-NETD- 7 (7-6C)
RHS 12 (12-5B)
EXHS- 12 (12-5B)
HS2- 12 (12-5B)
HS1- 12 (12-5B)
RESMFP 13 (13-8B)
MWAIT 7 (7-8C)
DP 12 (12-5B)
RCVMUTE- 12 (12-5B)
MICMUTE- 12 (12-5B)
CML 12 (12-5B)
S 12 (12-5B)
(12-6A)
SPSELB 12 (12-8C)
SPSELA 12 (12-8C)
VOLC 12 (12-8C)
VOLB 12 (12-8C)
VOLA 12 (12-8C)
VRSEL3- 12 (12-6B)
VRSEL2- 12 (12-6B)
VRSEL1- 12 (12-6B)
CION 12 (12-6B)
TXSELB 12 (12-4A)
TXSELA 12 (12-4B)
RXSEL 3 (3-4A)
EC 12
SPMUTE- 12 (12-3C)
MR 12 (12-6B)
IORES2- 8 (8-6B)
IORES1- 2 (2-5C)
IORES0- 10 (10-7A)
MANRES- 10 (10-6C)
CI- 12 (12-6B)
BZ 12 (12-8D)
MA[0:11] 11 (11-5D)
MD[0:15] 11 (11-5D)
MCLK 11 (11-8D)
MCLKE 11 (11-8D)
UDQM 11 (11-8D)
LDQM 11 (11-8D)
MWE- 11 (11-8D)
CAS- 11 (11-8D)
RAS- 11 (11-8D)
MCS- 11 (11-8D)
BS1 11 (11-8D)
BS0 11 (11-8D)

MDMC PWB (夜間FAX)

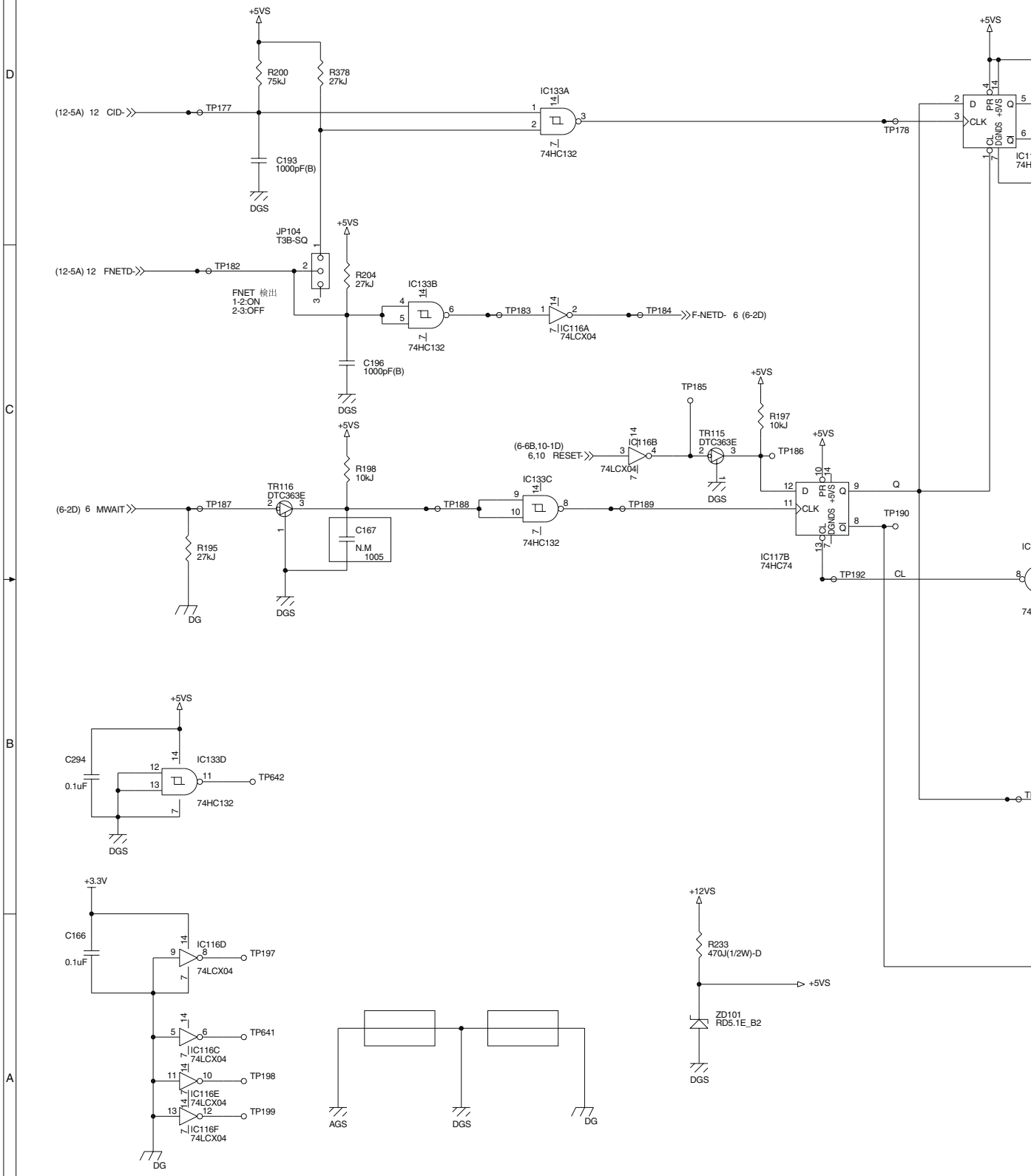

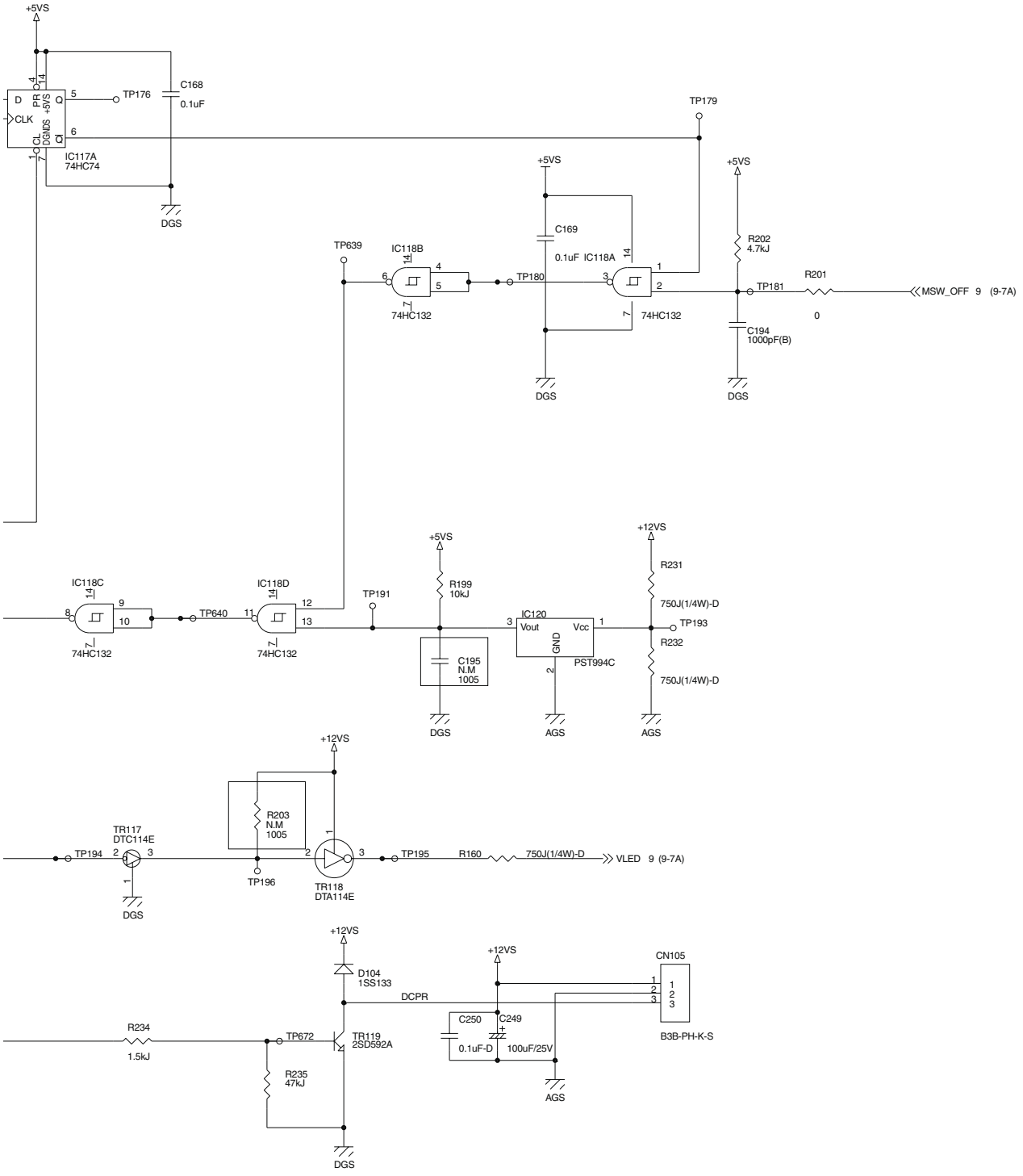
+5VS
IC117A
74HC74
TP176
C168
0.1uF
DGS
TP179
TP639
IC118B
74HC132
TP180
C169
0.1uF
IC118A
74HC132
R202
4.7kJ
TP181
R201
0
MSW_OFF 9 (9-7A)
C194
1000pF(B)
IC118C
74HC132
TP640
IC118D
74HC132
TP191
R199
10kJ
C195
N.M
1005
IC120
PST994C
Vout
Vcc
GND
+12VS
R231
750J(1/4W)-D
TP193
R232
750J(1/4W)-D
AGS
TR117
DTC114E
TP194
R203
N.M
1005
TP196
TR118
DTA114E
TP195
R160
750J(1/4W)-D
VLED 9 (9-7A)
D104
1SS133
DCPR
R234
1.5kJ
TP672
TR119
2SD592A
R235
47kJ
C250
0.1uF-D
C249
100uF/25V
CN105
B3B-PH-K-S

MDMC PWB (CPU ワークメモリ　プログラム ROM)

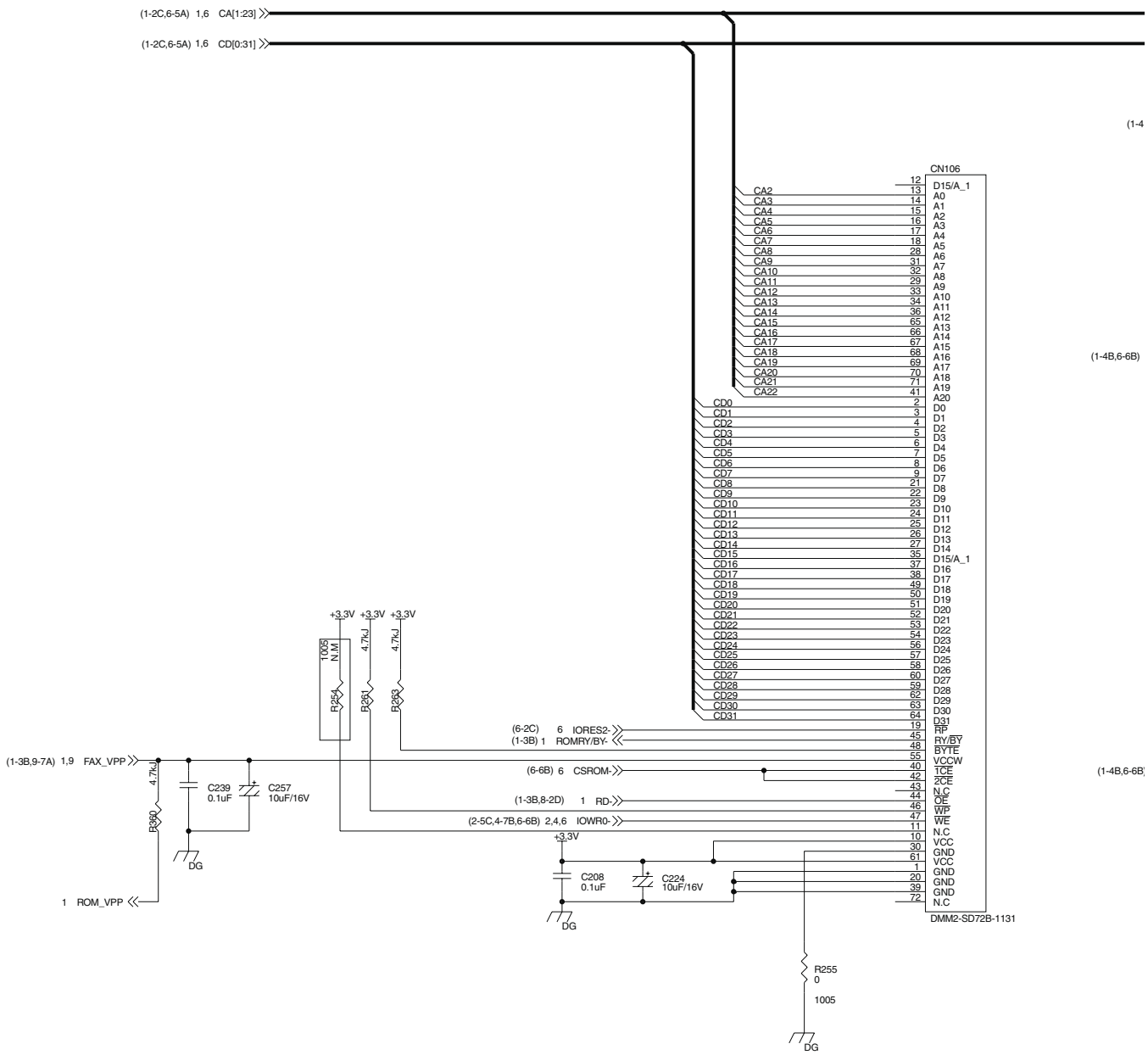

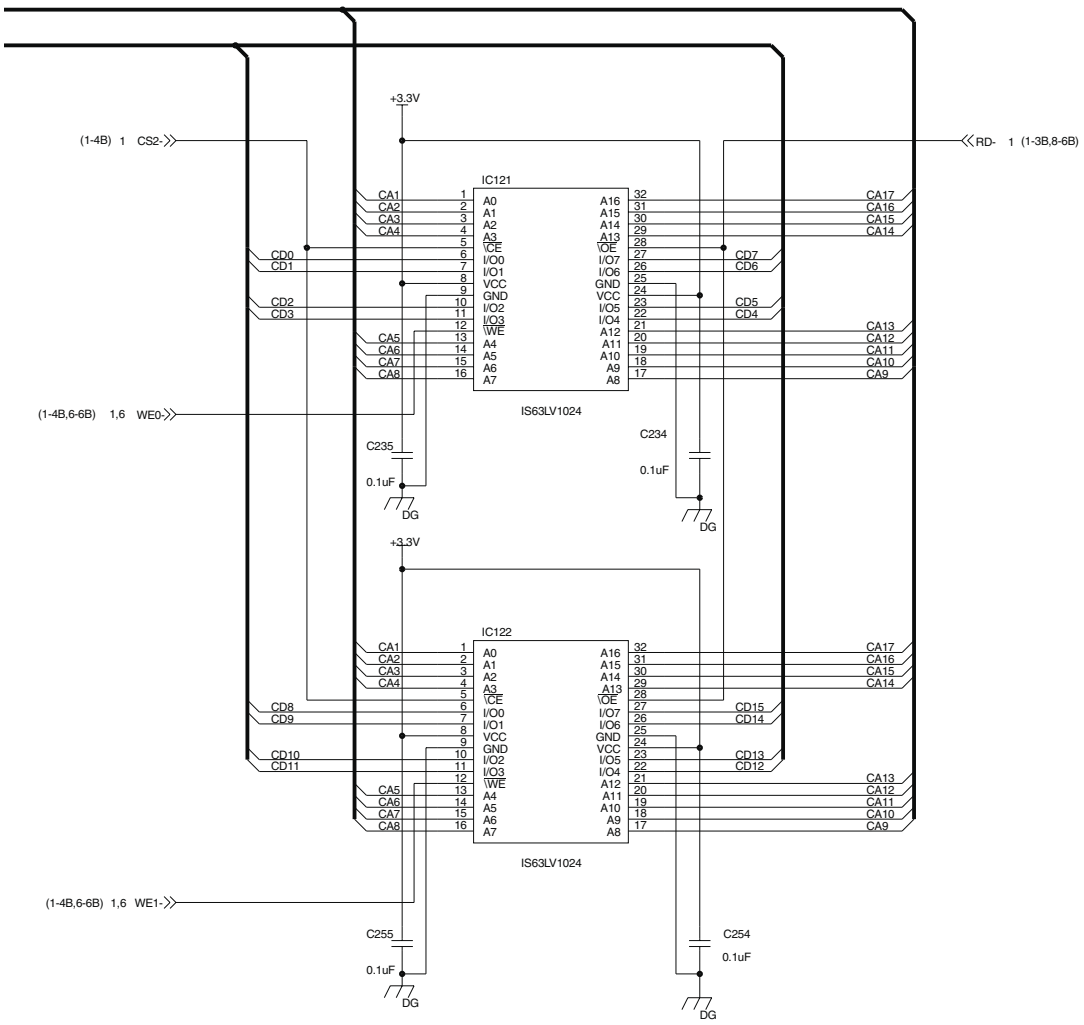
+3.3V
(1-4B) 1 CS2-
RD- 1 (1-3B,8-6B)
IC121
IS63LV1024
(1-4B,6-6B) 1,6 WE0-
C235
0.1uF
C234
0.1uF
DG
+3.3V
IC122
IS63LV1024
(1-4B,6-6B) 1,6 WE1-
C255
0.1uF
C254
0.1uF
DG

MDMC PWB (MFP-I /F, H-UDI-I/F)

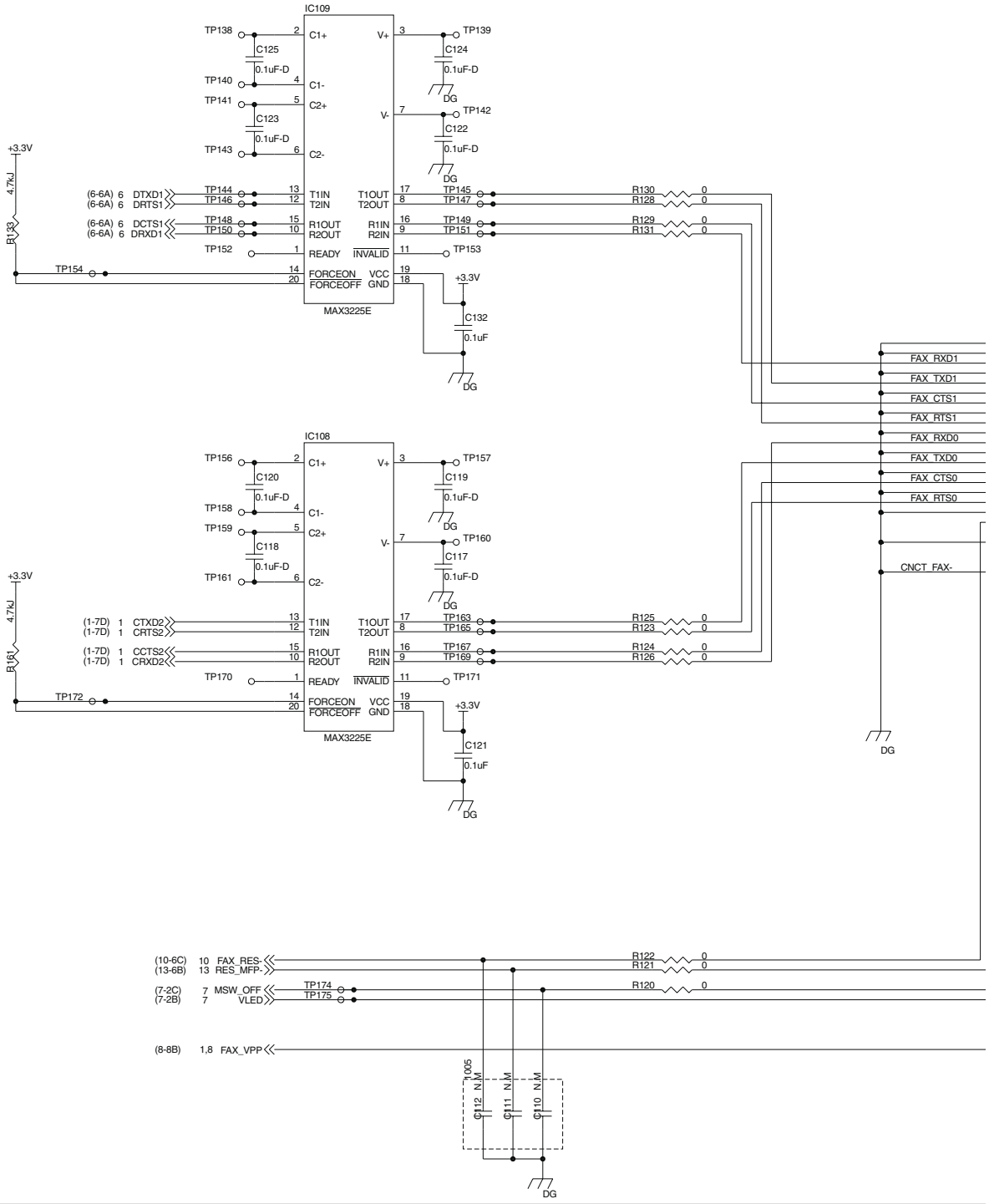

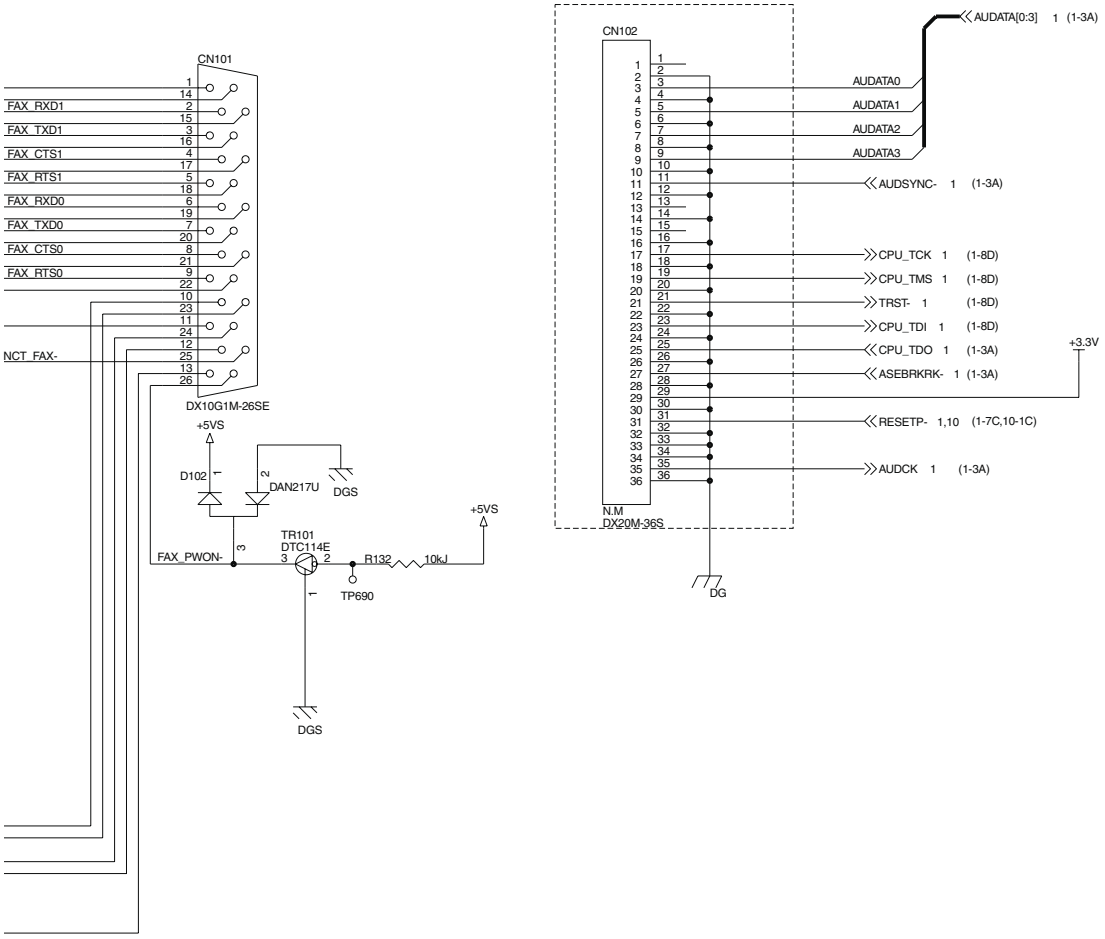
CN101
FAX_RXD1
FAX_TXD1
FAX_CTS1
FAX_RTS1
FAX_RXD0
FAX_TXD0
FAX_CTS0
FAX_RTS0
NCT_FAX-
DX10G1M-26SE
+5VS
D102
DAN217U
DGS
TR101
DTC114E
FAX_PWON-
R132
10kJ
TP690
DGS
+5VS
CN102
AUDATA[0:3] 1 (1-3A)
AUDATA0
AUDATA1
AUDATA2
AUDATA3
AUDSYNC- 1 (1-3A)
CPU_TCK 1 (1-8D)
CPU_TMS 1 (1-8D)
TRST- 1 (1-8D)
CPU_TDI 1 (1-8D)
CPU_TDO 1 (1-3A)
ASEBRKRK- 1 (1-3A)
+3.3V
RESETP- 1,10 (1-7C,10-1C)
AUDCK 1 (1-3A)
N.M
DX20M-36S
DG

MDMC PWB (RESET, POWER)

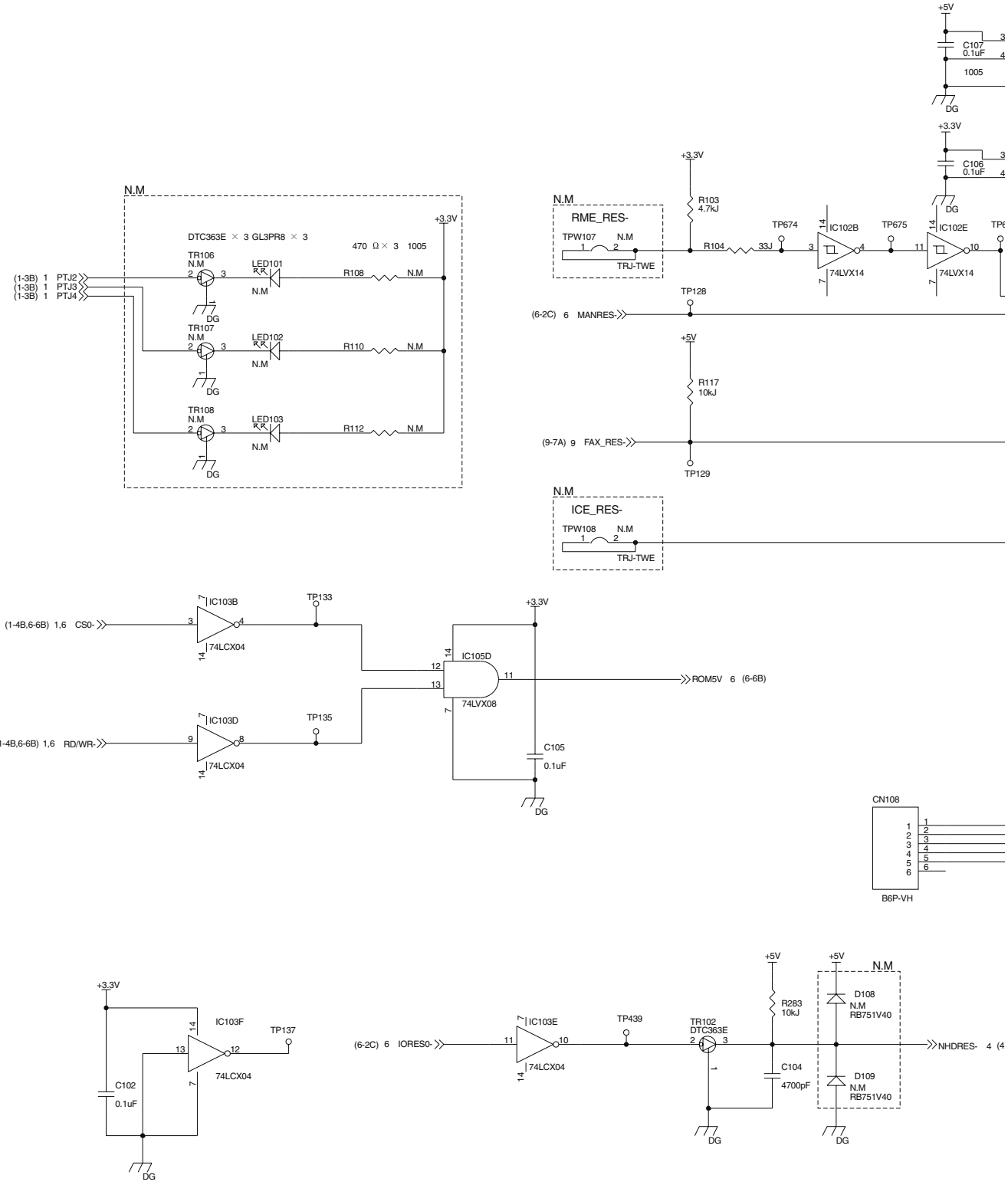

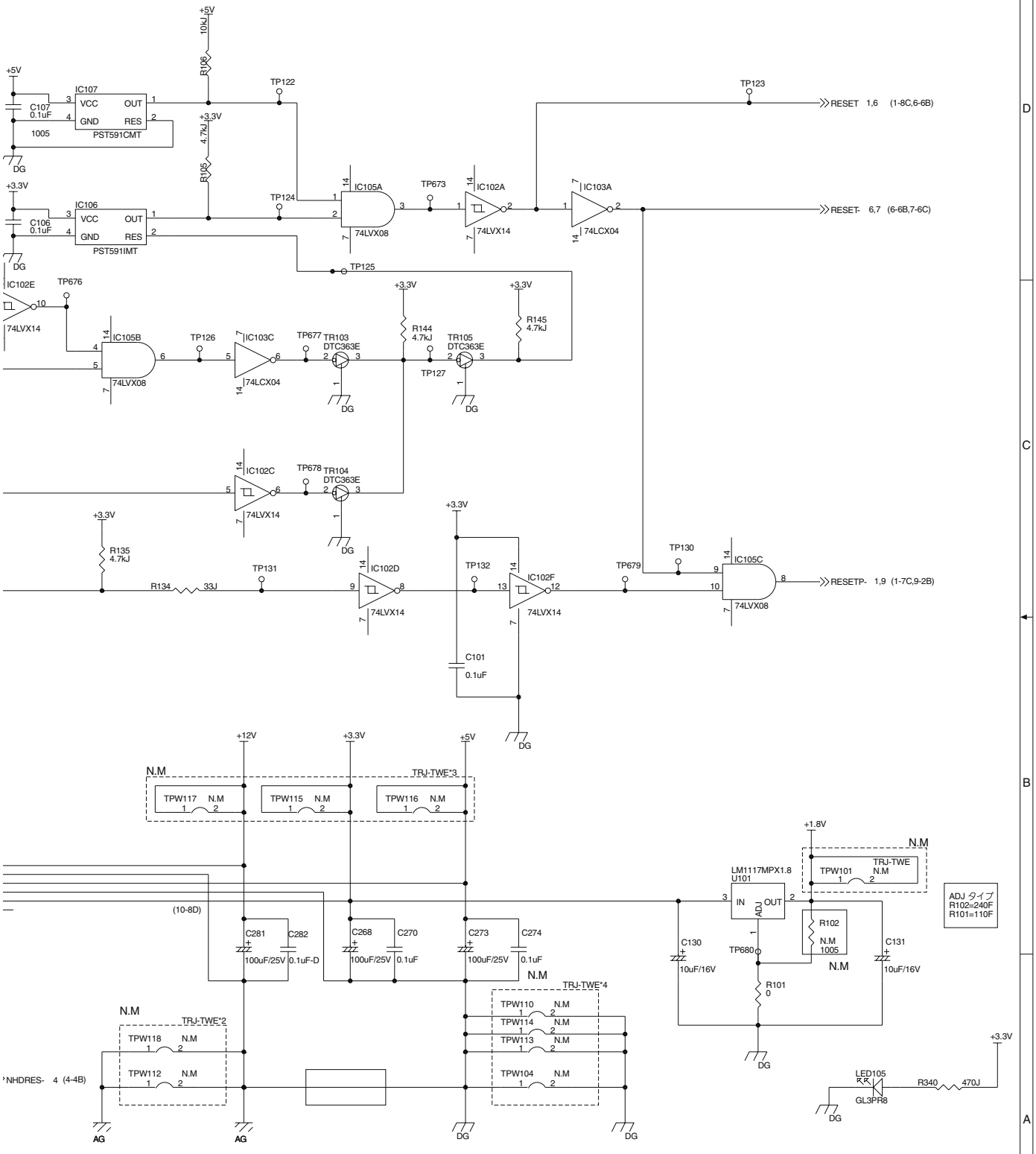
+5V
10kJ
R106
IC107
VCC
OUT
GND
RES
PST591CMT
C107
0.1uF
1005
DG
+3.3V
4.7kJ
R105
IC106
C106
0.1uF
PST591IMT
TP122
TP123
TP124
TP125
IC105A
74LVX08
TP673
IC102A
74LVX14
IC103A
74LCX04
RESET 1,6 (1-8C,6-6B)
RESET- 6,7 (6-6B,7-6C)
IC102E
TP676
IC105B
TP126
IC103C
TP677
TR103
DTC363E
R144
4.7kJ
TP127
TR105
R145
TP678
IC102C
TR104
R135
R134
33J
TP131
IC102D
TP132
IC102F
TP679
TP130
IC105C
RESETP- 1,9 (1-7C,9-2B)
C101
0.1uF
(10-8D)
N.M
TRJ-TWE*3
TPW117
TPW115
TPW116
C281
C282
100uF/25V
0.1uF-D
C268
C270
C273
C274
TRJ-TWE*4
TPW110
TPW114
TPW113
TPW104
TRJ-TWE*2
TPW118
TPW112
NHDRES- 4 (4-4B)
AG
+1.8V
LM1117MPX1.8
U101
IN
OUT
ADJ
TPW101
R102
TP680
R101
0
C130
10uF/16V
C131
ADJ タイプ
R102=240F
R101=110F
LED105
GL3PR8
R340
470J

MDMC PWB (SDRAM)

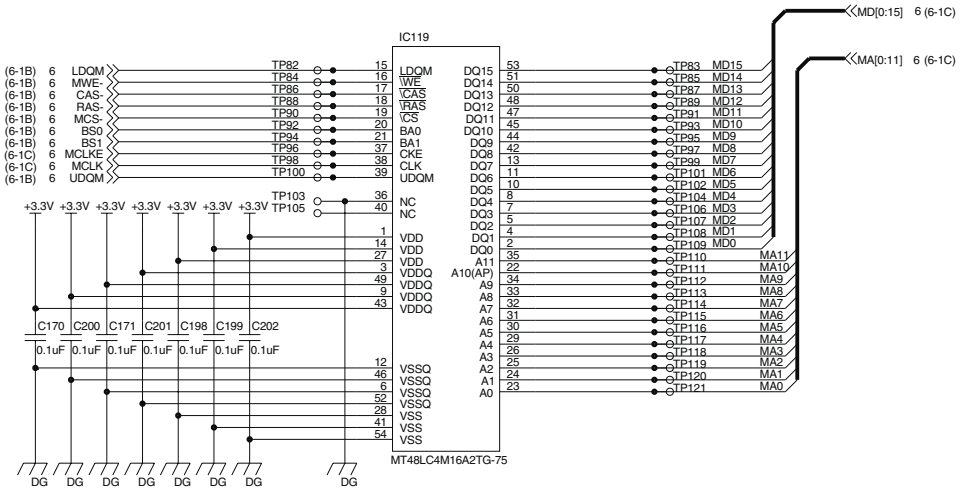

MDMC PWB （音声経路、 TEL/LIU I/F ）

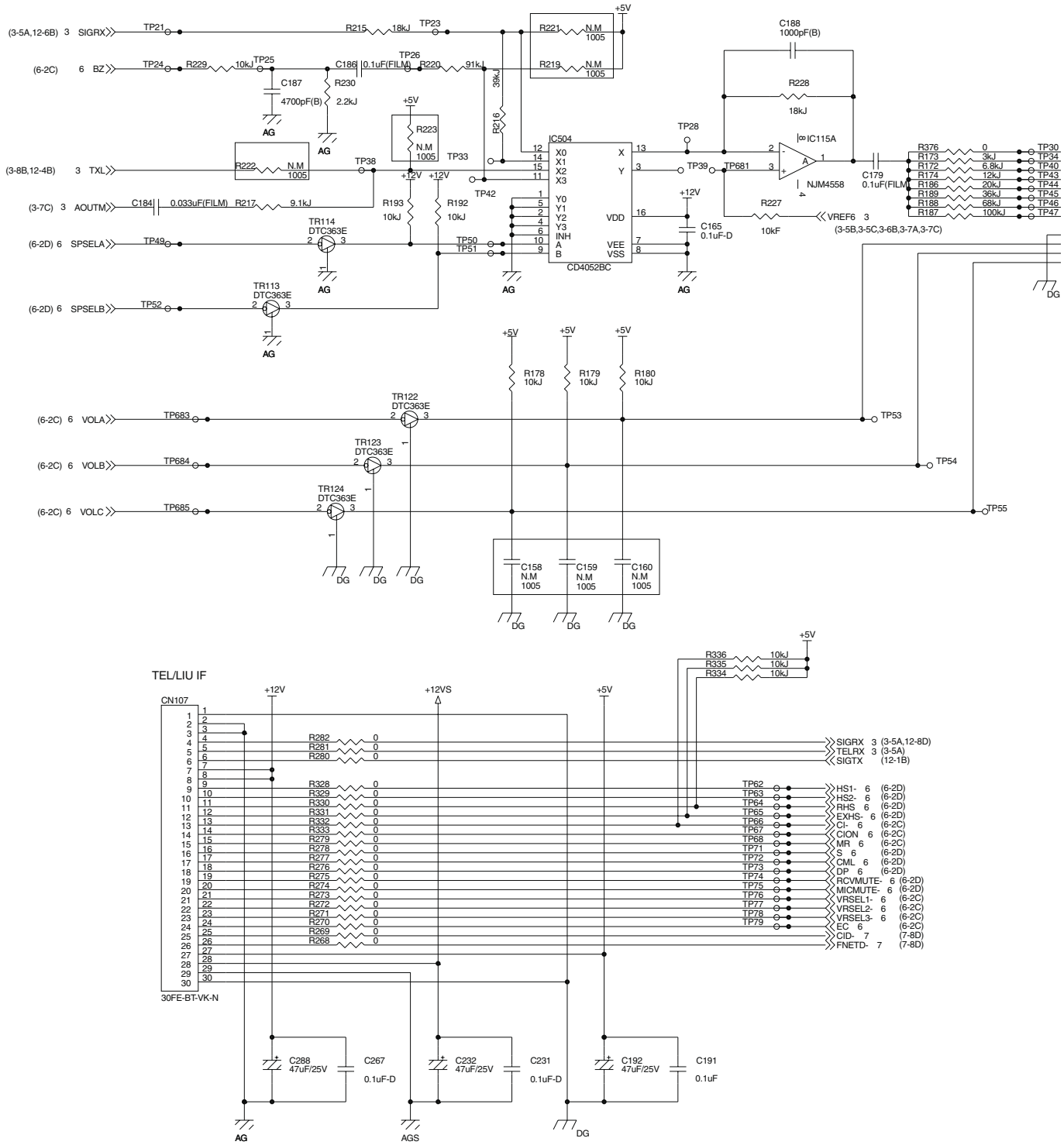

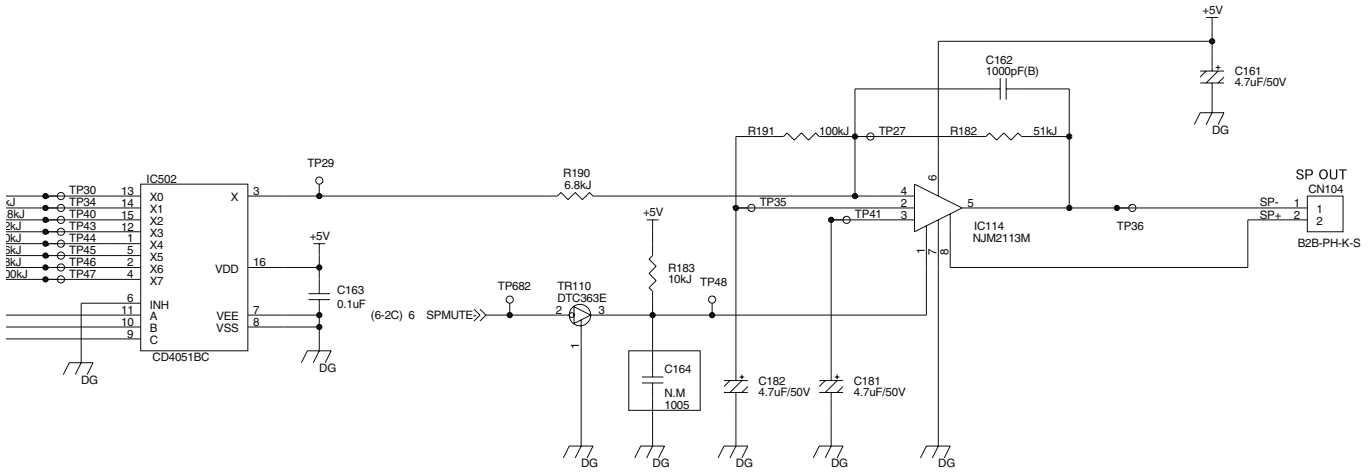
IC502
CD4051BC
TP30
TP34
TP40
TP43
TP44
TP45
TP46
TP47
X0
X1
X2
X3
X4
X5
X6
X7
X
INH
A
B
C
VDD
VEE
VSS
DG
TP29
+5V
C163
0.1uF
R190
6.8kJ
R191
100kJ
TP27
R182
51kJ
C162
1000pF(B)
C161
4.7uF/50V
TP35
TP41
IC114
NJM2113M
TP36
SP OUT
CN104
SP-
SP+
B2B-PH-K-S
TP682
TR110
DTC363E
(6-2C) 6 SPMUTE
R183
10kJ
TP48
C164
N.M
1005
C182
4.7uF/50V
C181
4.7uF/50V

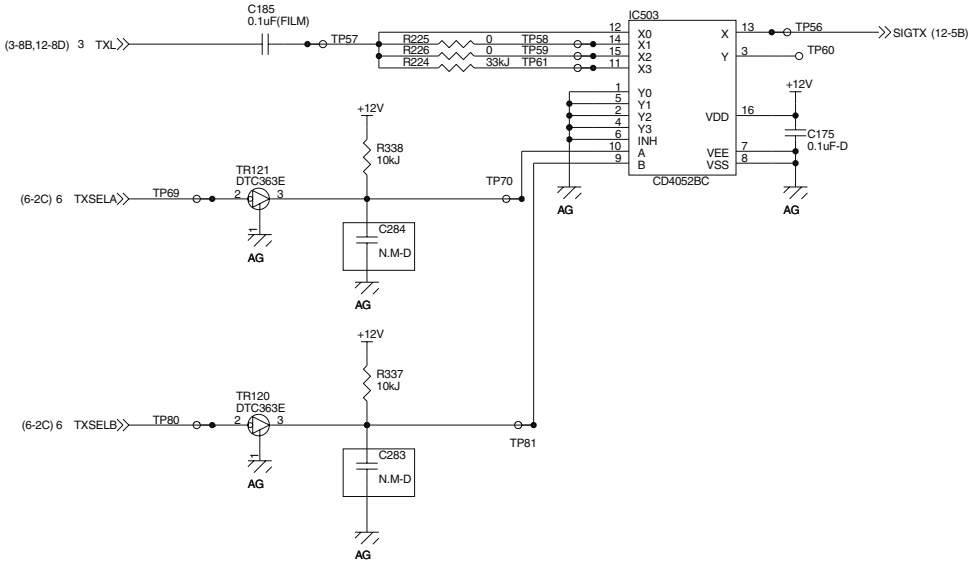
C185
0.1uF(FILM)
(3-8B,12-8D) 3 TXL
TP57
R225
R226
R224
0
0
33kJ
TP58
TP59
TP61
IC503
CD4052BC
X0
X1
X2
X3
Y0
Y1
Y2
Y3
INH
A
B
X
Y
VDD
VEE
VSS
TP56
SIGTX (12-5B)
TP60
+12V
C175
0.1uF-D
AG
TR121
DTC363E
(6-2C) 6 TXSELA
TP69
TP70
R338
10kJ
C284
N.M-D
TR120
DTC363E
(6-2C) 6 TXSELB
TP80
TP81
R337
10kJ
C283
N.M-D

MDMC PWB （ 3V-5V 変換）

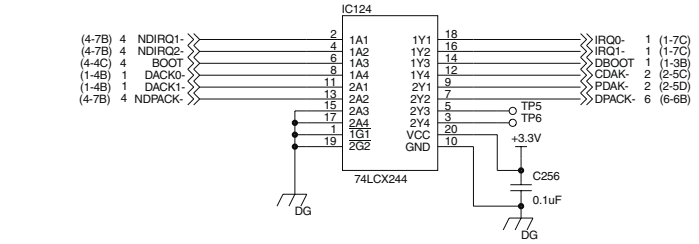

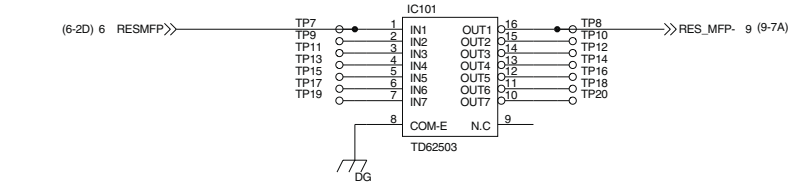

MDMC PWB

PARTS LAYOUT / 部品配置図

[PARTS SURFACE / 部品面]

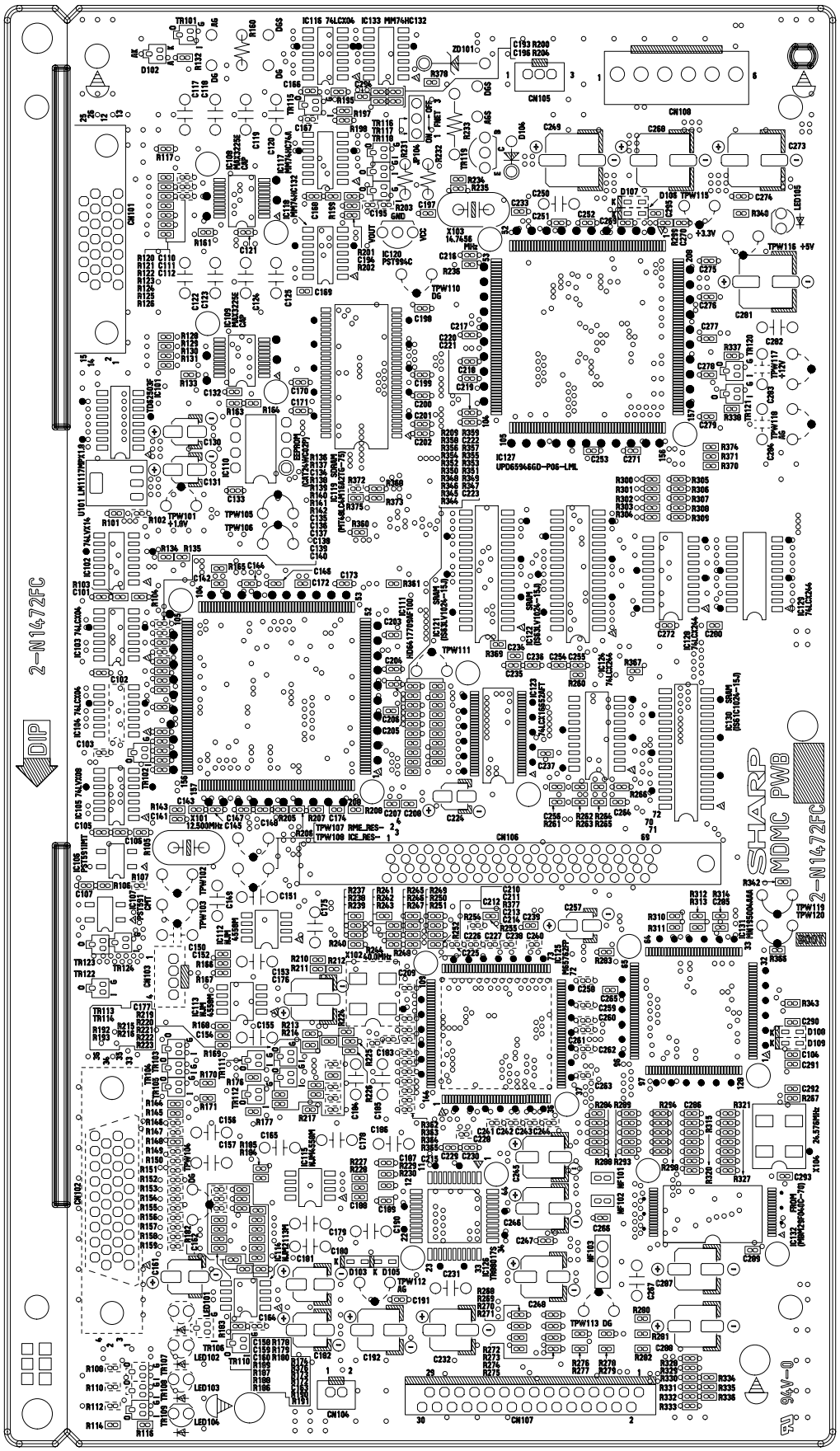

MDMC PWB

PARTS LAYOUT / 部品配置図

[SOLDER SURFACE / 半田面**]**

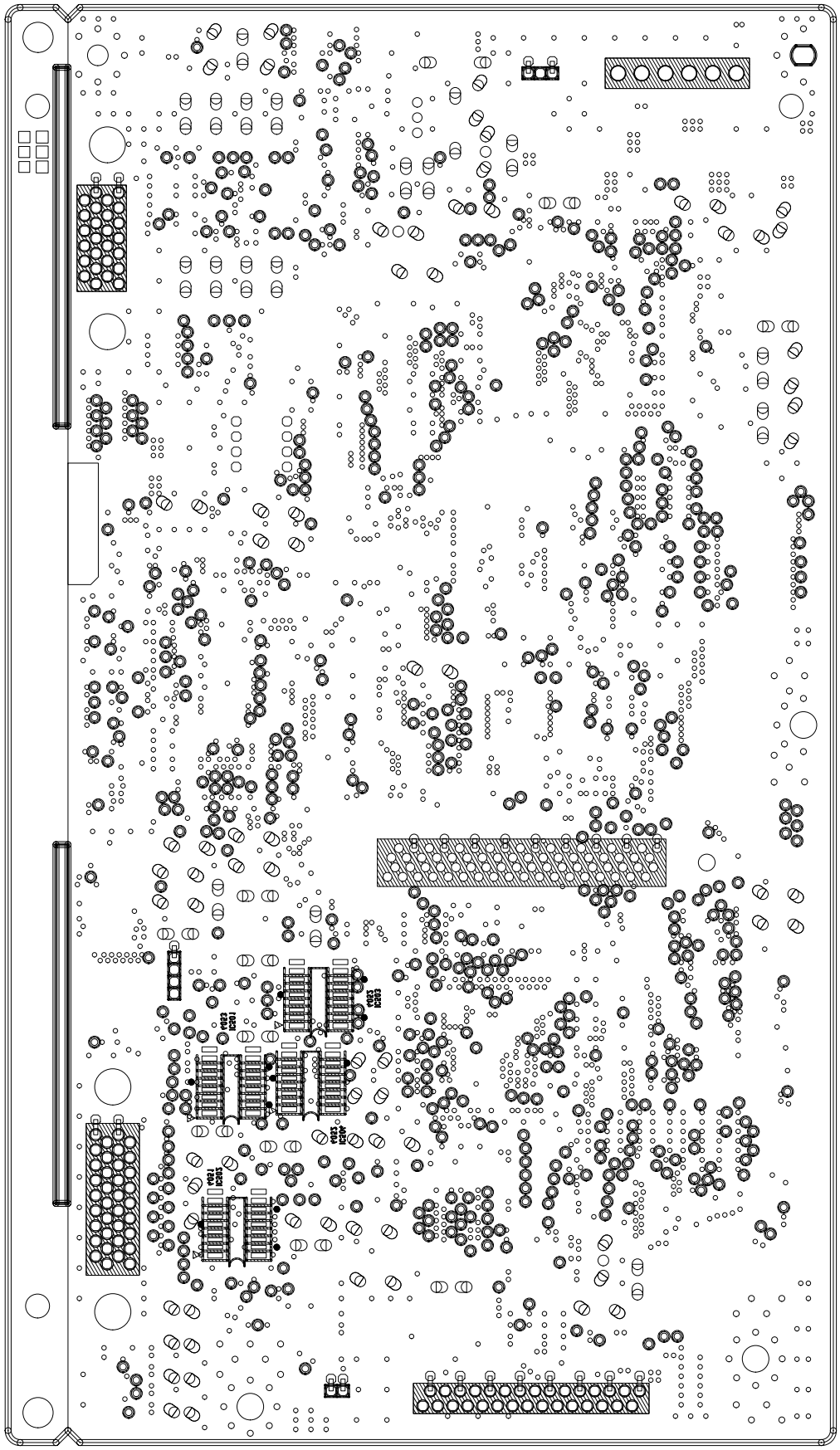

M. TEL/LIU PWB (JAPAN)

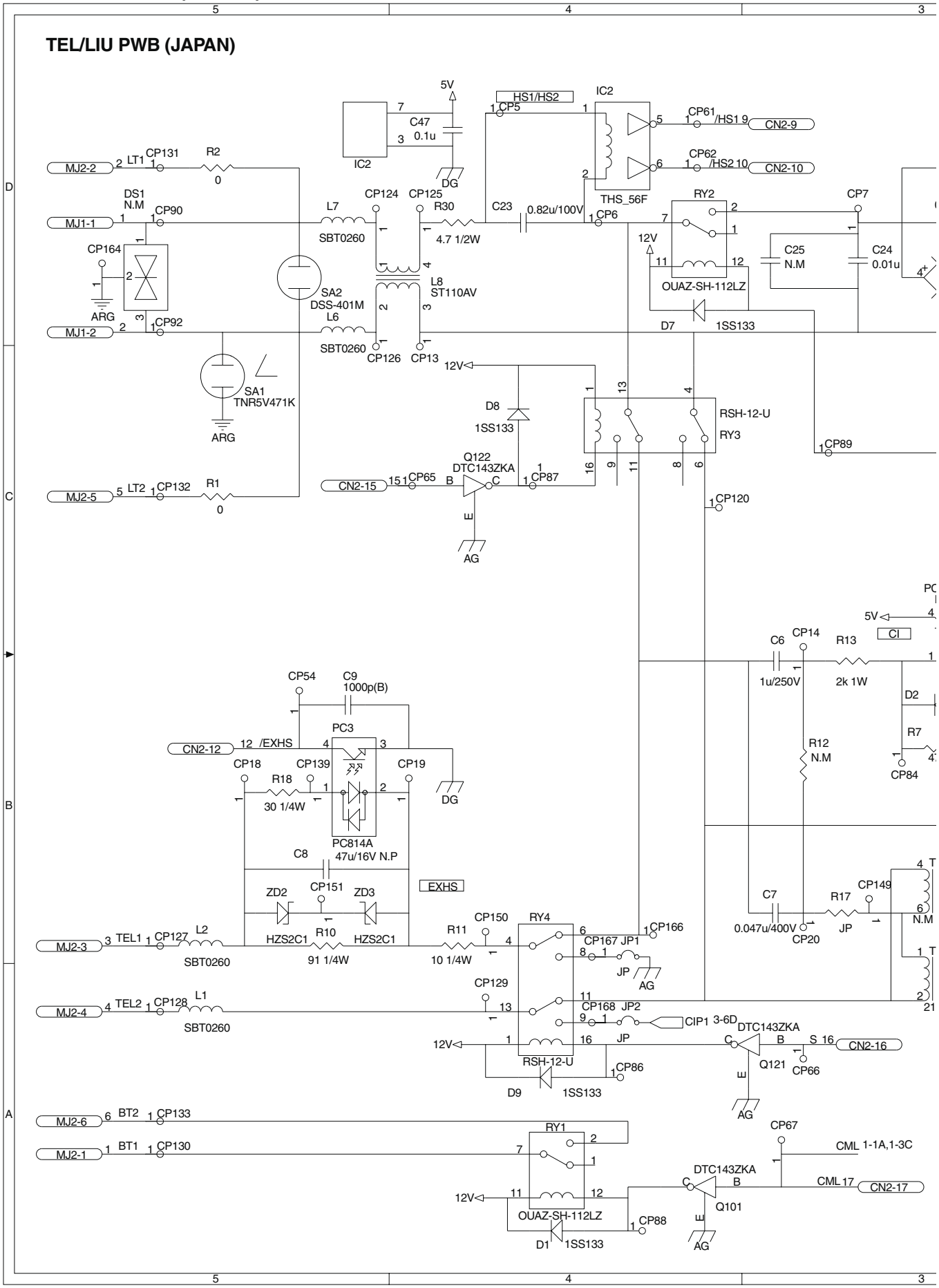

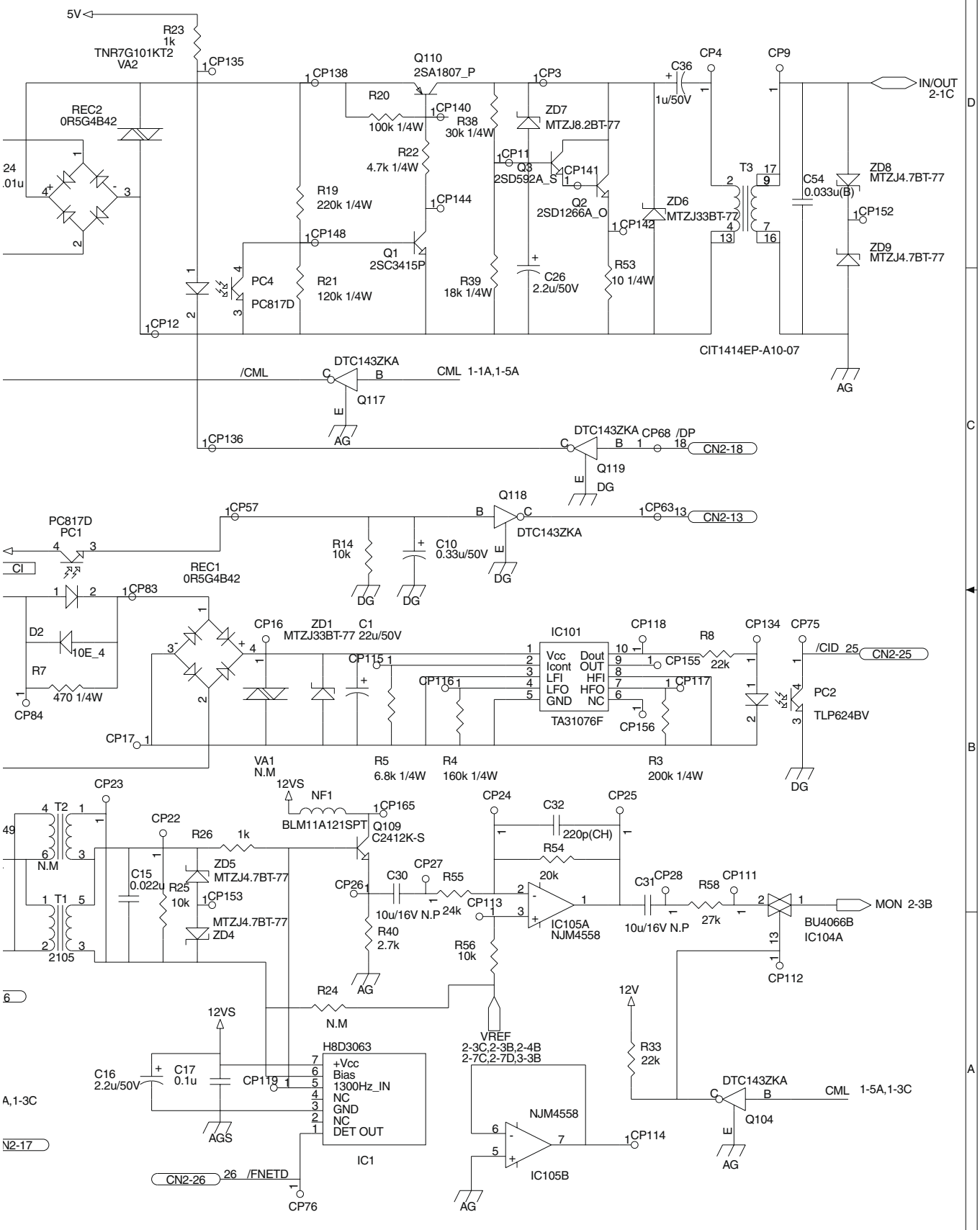
1/3
5V
R23
1k
TNR7G101KT2
VA2
CP135
CP138
Q110
2SA1807_P
CP3
C36
1u/50V
CP4
CP9
IN/OUT
2-1C
REC2
0R5G4B42
R20
100k 1/4W
CP140
R38
30k 1/4W
ZD7
MTZJ8.2BT-77
R22
4.7k 1/4W
CP11
Q3
2SD592A_S
CP141
T3
C54
0.033u(B)
ZD8
MTZJ4.7BT-77
R19
220k 1/4W
CP144
Q2
2SD1266A_O
ZD6
MTZJ33BT-77
CP152
CP148
Q1
2SC3415P
CP142
ZD9
MTZJ4.7BT-77
PC4
PC817D
R21
120k 1/4W
R39
18k 1/4W
C26
2.2u/50V
R53
10 1/4W
CP12
CIT1414EP-A10-07
AG
/CML
DTC143ZKA
CML 1-1A,1-5A
Q117
CP136
DTC143ZKA
CP68 /DP
CN2-18
Q119
DG
Q118
CP57
CP63
CN2-13
PC817D
PC1
R14
10k
C10
0.33u/50V
DTC143ZKA
CI
REC1
0R5G4B42
CP83
D2
10E_4
R7
470 1/4W
CP84
CP16
ZD1
MTZJ33BT-77
C1
22u/50V
IC101
CP118
R8
22k
CP134
CP75
/CID
CN2-25
CP115
Vcc
Icont
LFI
LFO
GND
Dout
OUT
HFI
HFO
NC
CP155
CP116
CP117
PC2
TLP624BV
TA31076F
CP156
CP17
VA1
N.M
R5
6.8k 1/4W
R4
160k 1/4W
R3
200k 1/4W
CP23
12VS
NF1
CP165
CP24
C32
CP25
T2
CP22
BLM11A121SPT
Q109
C2412K-S
220p(CH)
R26
1k
R54
N.M
ZD5
MTZJ4.7BT-77
C15
0.022u
R25
10k
CP153
CP26
C30
CP27
R55
20k
C31
CP28
R58
CP111
MON 2-3B
T1
MTZJ4.7BT-77
ZD4
10u/16V N.P
24k
CP113
IC105A
NJM4558
10u/16V N.P
27k
BU4066B
IC104A
2105
R40
2.7k
R56
10k
CP112
R24
AG
12V
N.M
VREF
2-3C,2-3B,2-4B
2-7C,2-7D,3-3B
R33
22k
H8D3063
+Vcc
Bias
1300Hz_IN
NC
GND
NC
DET OUT
C16
2.2u/50V
C17
0.1u
CP119
DTC143ZKA
CML 1-5A,1-3C
Q104
NJM4558
CP114
AGS
IC1
IC105B
CN2-26
/FNETD
CP76
AG

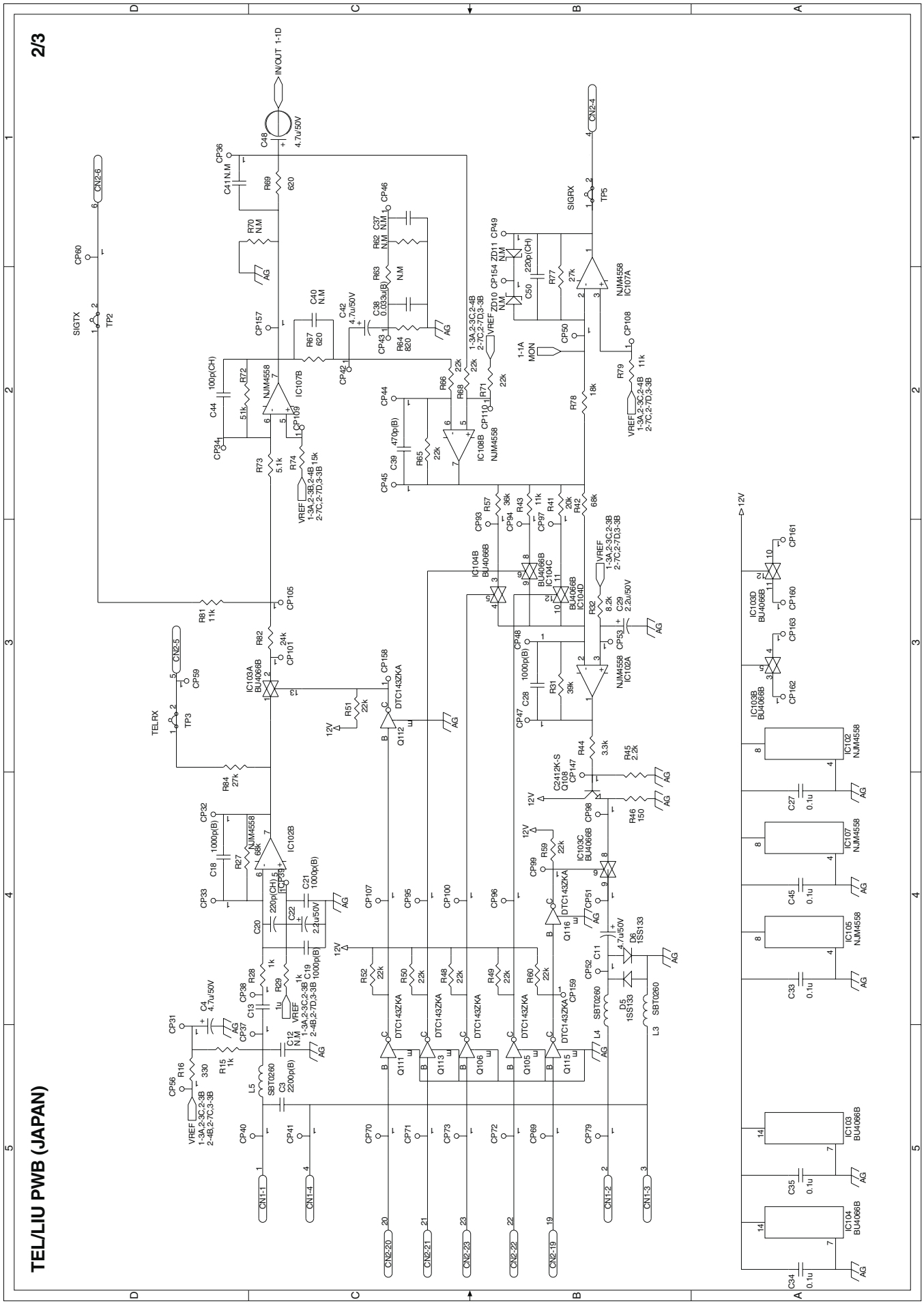
TEL/LIU PWB (JAPAN)
2/3

TEL/LIU PWB (JAPAN)

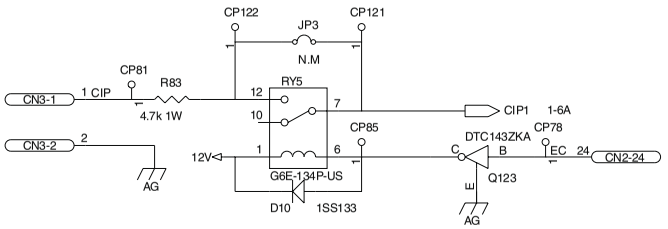

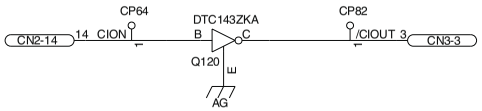

Japan Only

CN3	S03B-XASK-1
1	CIP
2	AG
3	/CIOUT

MJ2	MJ-66J-RD315
1	BT1
2	LT1
3	TEL1
4	TEL2
5	LT2
6	BT2

MJ1	MJ-62J-RD315
1	L1
2	L2

Japan Only

CN1	MD-S610-90
1	TX+
2	RX+
3	RX-
4	TX-
5	/RHS
6	DG

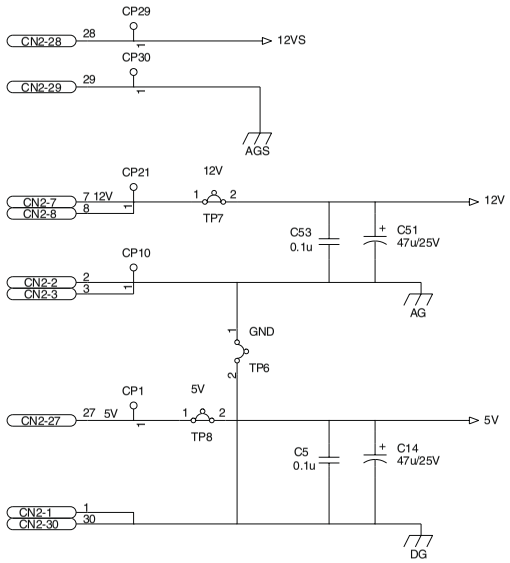

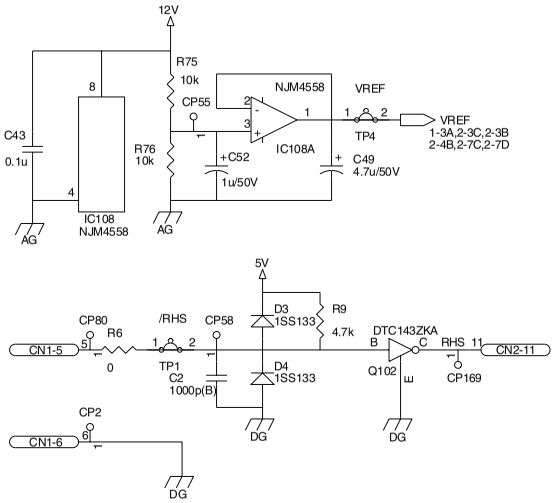

CN2	30FE-BT-VK-N		
DG	1	2	AG
AG	3	4	SIGRX
TELRX	5	6	SIGTX
12V	7	8	12V
/HS1	9	10	/HS2
RHS	11	12	/EXHS
/CI	13	14	CION
MR	15	16	S
CML	17	18	/DP
/RCVMUTE	19	20	/MICMUTE
/VRSEL1	21	22	/VRSEL2
/VRSEL3	23	24	EC
/CID	25	26	/FNETD
5V	27	28	12VS
AGS	29	30	DG

TEL LIU PWB (JAPAN)

PARTS LAYOUT / 部品配置図

[PARTS SURFACE / 部品面**]**

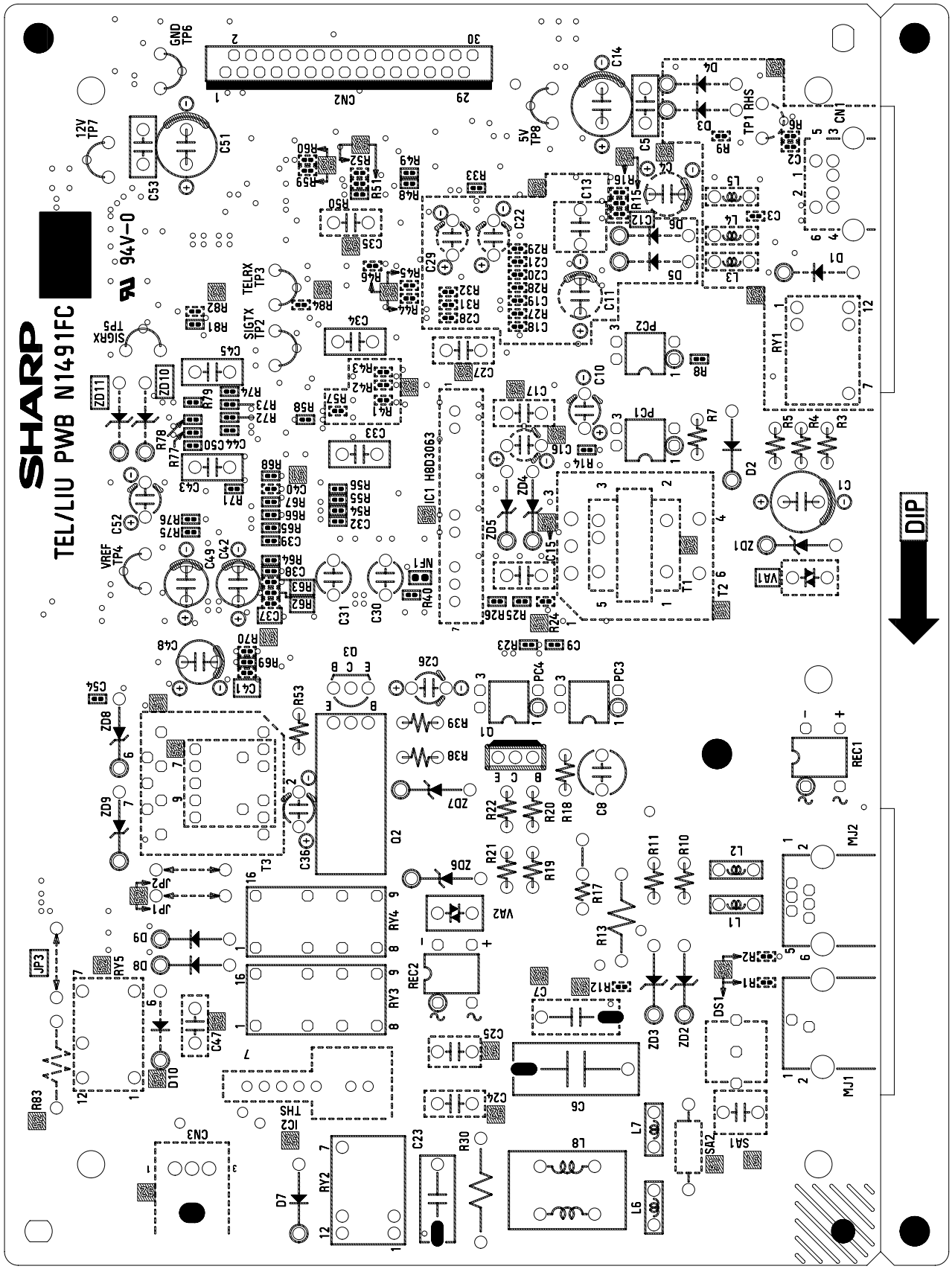

TEL LIU PWB (JAPAN)

PARTS LAYOUT / 部品配置図

[SOLDER SURFACE / 半田面**]**

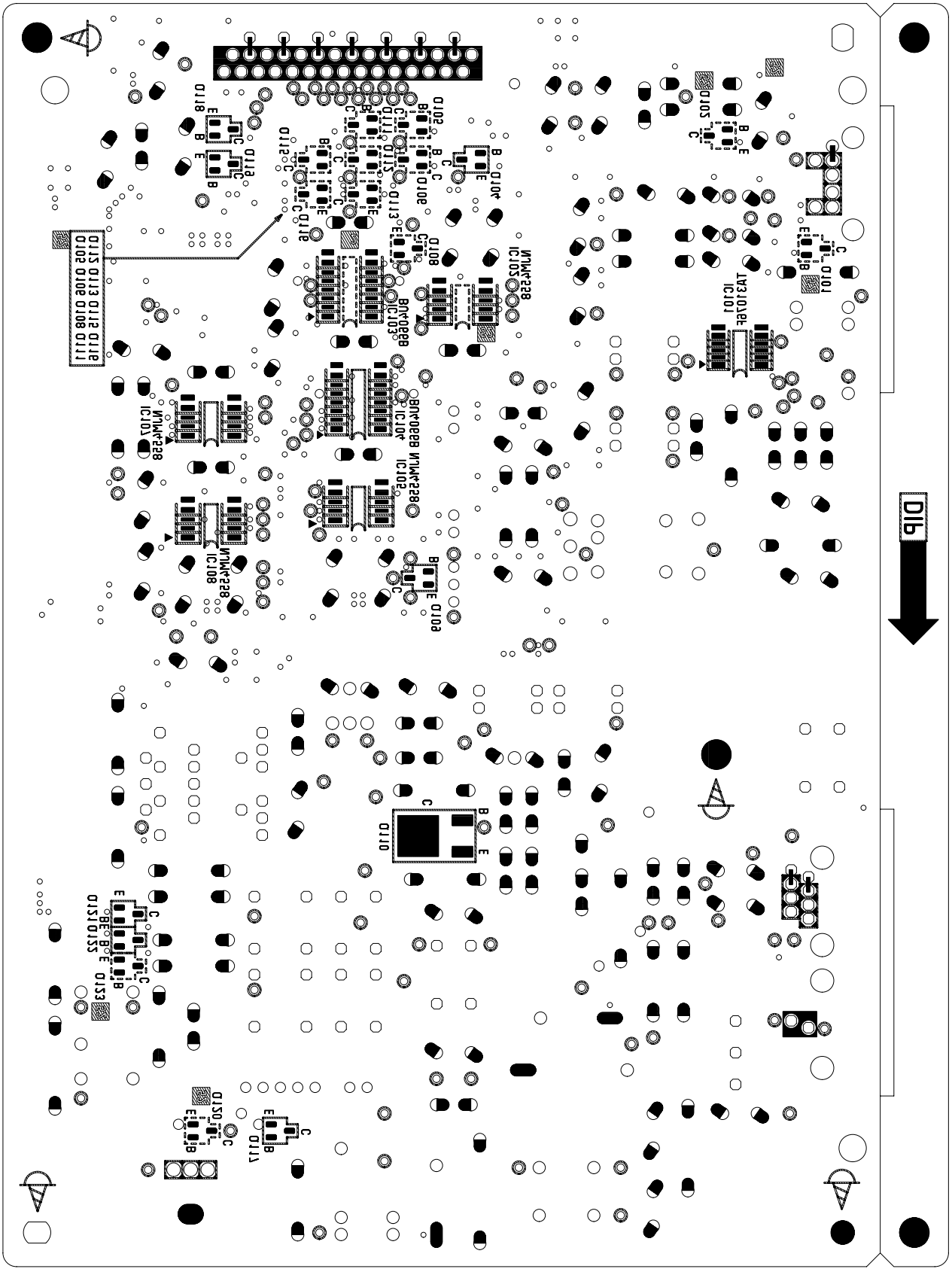

N. POWER SUPPLY / 電源回路

(1) AC POWER PWB (100V/127V)

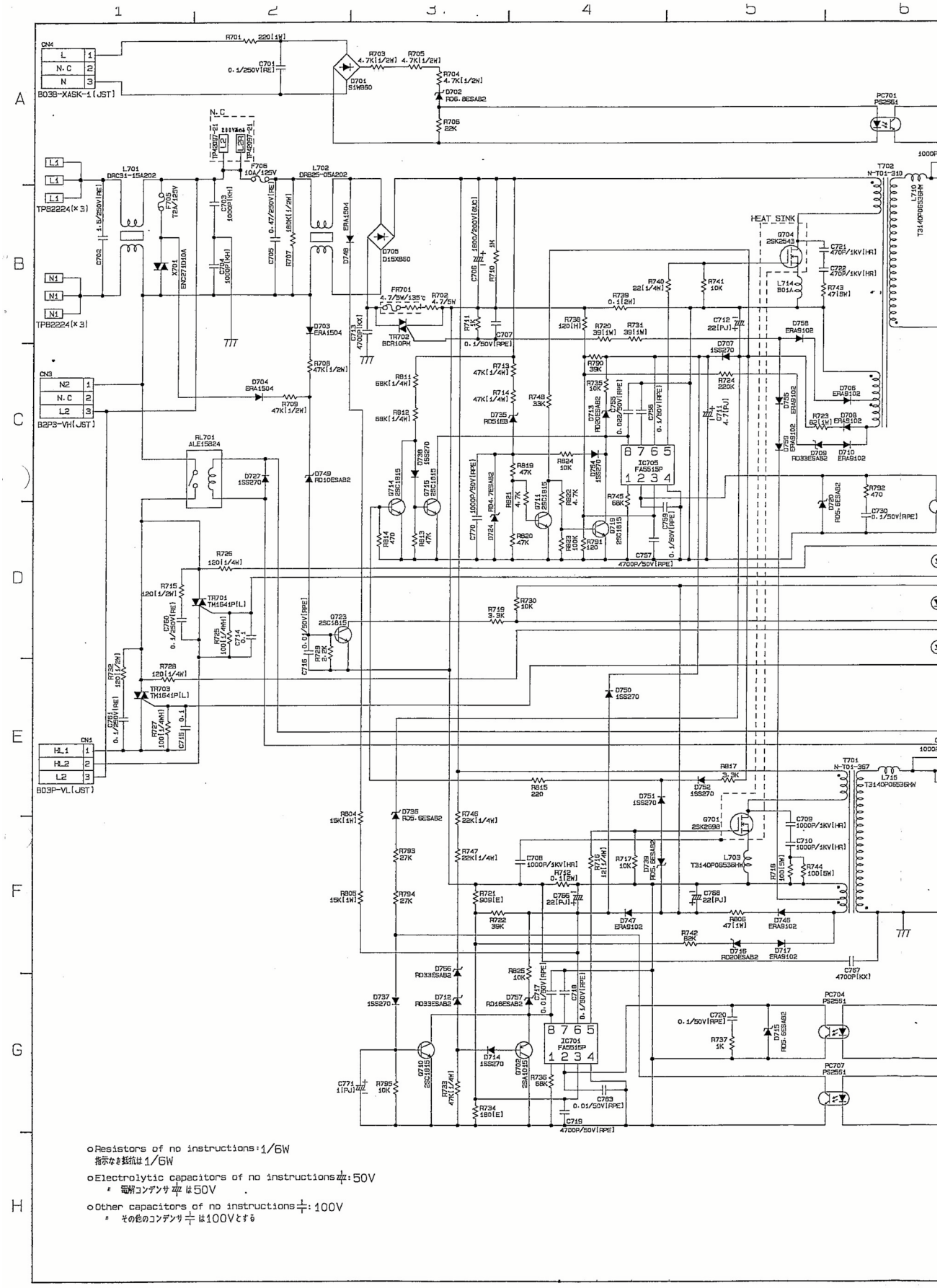

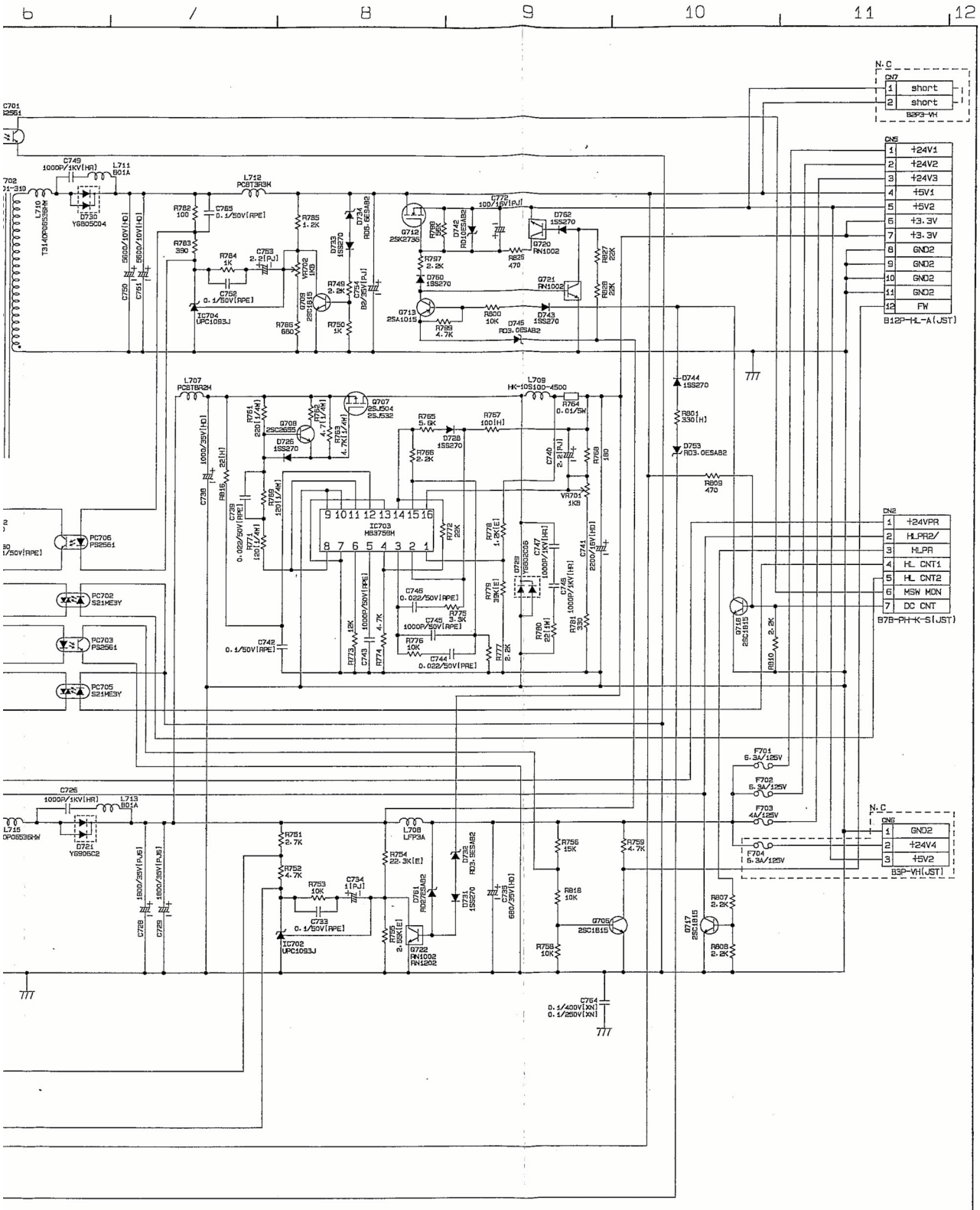
6
7
8
9
10
11
12
CN7
1 short
2 short
B2P3-VH
CN5
1 +24V1
2 +24V2
3 +24V3
4 +5V1
5 +5V2
6 +3.3V
7 +3.3V
8 GND2
9 GND2
10 GND2
11 GND2
12 FW
B12P-HL-A(JST)
CN2
1 +24VPR
2 HLPR2/
3 HLPR
4 HL CNT1
5 HL CNT2
6 MSW MON
7 DC CNT
B7B-PH-K-S(JST)
CN6
1 GND2
2 +24V4
3 +5V2
B3P-VH(JST)
N.C
IC703 MB3759H
IC704 UPC1093J
IC702 UPC1093J
F701 6.3A/125V
F702 6.3A/125V
F703 4A/125V
F704 6.3A/125V

(2) DC CIRCUIT

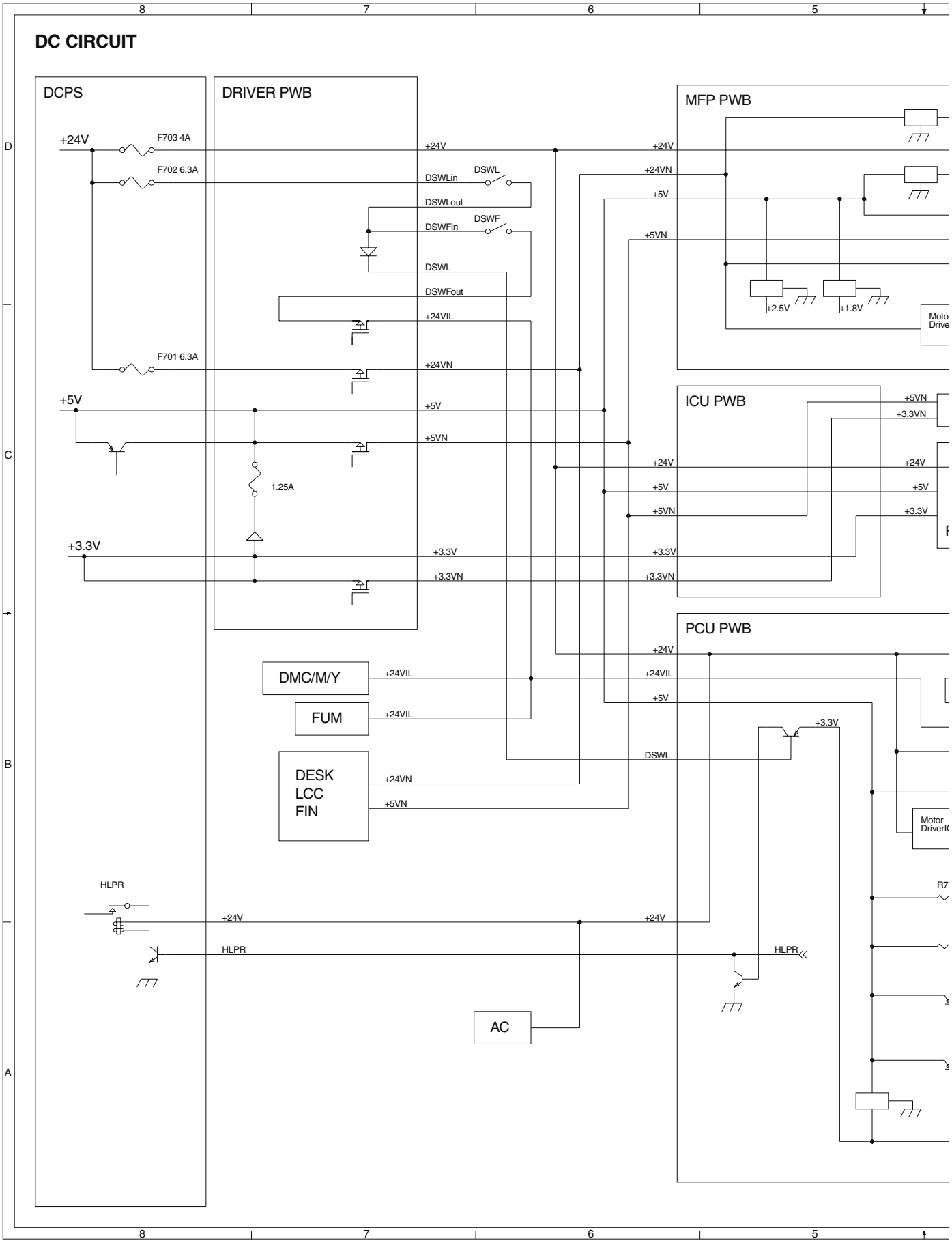
DC CIRCUIT
DCPS
DRIVER PWB
MFP PWB
ICU PWB
PCU PWB
+24V
F703 4A
F702 6.3A
F701 6.3A
DSWLin
DSWL
DSWLout
DSWF
DSWFin
DSWL
DSWFout
+24VIL
+24VN
+5V
+5VN
1.25A
+3.3V
+3.3VN
+2.5V
+1.8V
DMC/M/Y
FUM
DESK
LCC
FIN
HLPR
AC
R7

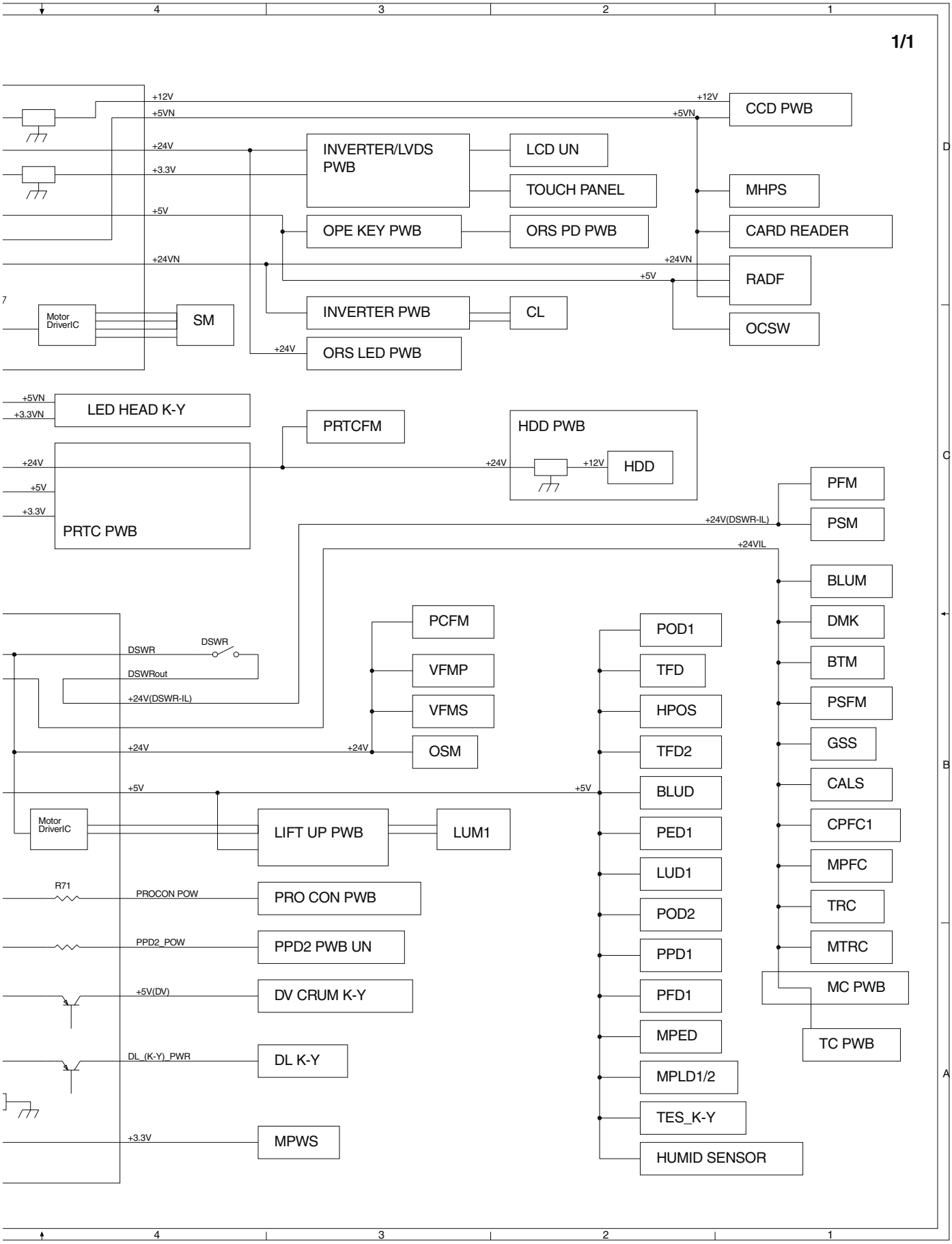
1/1
+12V
+5VN
+24V
+3.3V
+5V
+24VN
INVERTER/LVDS PWB
LCD UN
TOUCH PANEL
OPE KEY PWB
ORS PD PWB
INVERTER PWB
CL
ORS LED PWB
Motor DriverIC
SM
CCD PWB
MHPS
CARD READER
RADF
OCSW
LED HEAD K-Y
+3.3VN
PRTCFM
PRTC PWB
HDD PWB
HDD
PFM
PSM
+24V(DSWR-IL)
+24VIL
BLUM
DMK
BTM
PSFM
GSS
CALS
CPFC1
MPFC
TRC
MTRC
MC PWB
TC PWB
DSWR
DSWRout
PCFM
VFMP
VFMS
OSM
POD1
TFD
HPOS
TFD2
BLUD
PED1
LUD1
POD2
PPD1
PFD1
MPED
MPLD1/2
TES_K-Y
HUMID SENSOR
LIFT UP PWB
LUM1
R71
PROCON POW
PRO CON PWB
PPD2_POW
PPD2 PWB UN
+5V(DV)
DV CRUM K-Y
DL_(K-Y)_PWR
DL K-Y
MPWS

CAUTION FOR BATTERY REPLACEMENT

(Danish) ADVARSEL !

Lithiumbatteri – Eksplosionsfare ved fejlagtig håndtering.
Udskiftning må kun ske med batteri
af samme fabrikat og type.
Levér det brugte batteri tilbage til leverandoren.

(English) Caution !

Danger of explosion if battery is incorrectly replaced.
Replace only with the same or equivalent type
recommended by the manufacturer.

"BATTERY DISPOSAL"
CONTAINS MANGANESE DIOXIDE LITHIUM BATTERY
MUST BE DISPOSED OF PROPERLY.
REMOVE THE BATTERY FROM THE PRODUCT AND
CONTACT FEDERAL OR STATE ENVIRONMENTAL
AGENCIES FOR INFORMATION ON RECYCLING
AND DISPOSAL OPTIONS.

"BATTERY DISPOSAL"
CONTAINS LITHIUM-ION BATTERY.
MUST BE DISPOSED OF PROPERLY.
REMOVE THE BATTERY FROM THE PRODUCT AND
CONTACT FEDERAL OR STATE ENVIRONMENTAL
AGENCIES FOR INFORMATION ON RECYCLING
AND DISPOSAL OPTIONS.

(Finnish) VAROITUS

Paristo voi räjähtää, jos se on virheellisesti asennettu.
Vaihda paristo ainoastaan laitevalmistajan suosittelemaan
tyyppiin. Hävitä käytetty paristo valmistajan ohjeiden
mukaisesti.

(French) ATTENTION

Il y a danger d'explosion s' il y a remplacement incorrect
de la batterie. Remplacer uniquement avec une batterie du
même type ou d'un type équivalent recommandé par
le constructeur.
Mettre au rebut les batteries usagées conformément aux
instructions du fabricant.

(Swedish) VARNING

Explosionsfara vid felaktigt batteribyte.
Använd samma batterityp eller en ekvivalent
typ som rekommenderas av apparattillverkaren.
Kassera använt batteri enligt fabrikantens
instruktion.

(German) Achtung

Explosionsgefahr bei Verwendung inkorrekter Batterien.
Als Ersatzbatterien dürfen nur Batterien vom gleichen Typ oder
vom Hersteller empfohlene Batterien verwendet werden.
Entsorgung der gebrauchten Batterien nur nach den vom
Hersteller angegebenen Anweisungen.

SHARP®

COPYRIGHT © 2002 BY SHARP CORPORATION

All rights reserved.
Printed.
No part of this publication may be reproduced,
stored in a retrieval system, or transmitted,
in any form or by any means,
electronic; mechanical; photocopying; recording or otherwise
without prior written permission of the publisher.

Trademark Acknowledgments

Microsoft Windows, MS-DOS, Windows NT, Windows 2000 are trademarks of Microsoft Corporation in the U. S. A. and other countries.

Macintosh, Power Macintosh, Mac OS, LaserWriter, and AppleTalk are registered trademarks of Apple Computer, Inc.

IBM, PC/ AT, and PowerPC are trademarks of International Business Machines Corporation.

Pentium is a registered trademark of Intel Corporation.

PCL is a trademark of the Hewlett- Packard Company.

PostScript® is a registered trademark of Adobe Systems Incorporated.

NetWare is a registered trademark of Novell, Inc.

All other trademarks and copyrights are the property of their respective owners.

SHARP CORPORATION
Digital Document System Group
Products Quality Assurance Department
Yamatokoriyama, Nara 639-1186, Japan
2002 November Printed

SHARP PARTS GUIDE

CODE:00ZARC260/P2/

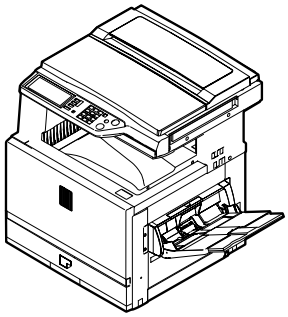

AR-C260
AR-C260M
AR-C260S

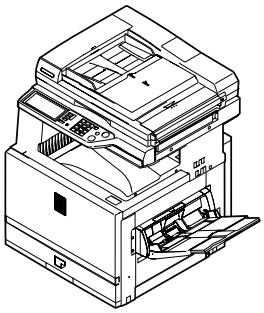

AR-C260F
AR-C260FP

デジタルフルカラー複合機
Digital Full Color Copier / Printer
Digital Full Color Multifunctional System

MODEL
AR-C260 [EXCEPT JAPAN]
AR-C260M
AR-C260FP [JAPAN ONLY]
AR-C260S [JAPAN ONLY]
AR-C260F [JAPAN ONLY]

このパーツガイドに掲載されている表示価格ランクは消費税抜きです。

CONTENTS

1 外装 1 (Exteriors 1)
2 外装 2 (Exteriors 2)
3 原稿検知ﾕﾆｯﾄ (Document detect unit)
4 操作部 (Operation panel section)
5 ｵﾘｼﾞﾅﾙｶﾊﾞｰﾕﾆｯﾄ (Original cover unit)
[AR-C260S/AR-C260,
AR-C260M(Except U.S.A,Europe,Australia,New Zealand)]
6 ｽｷｬﾅｰﾕﾆｯﾄ 1 (Scanner unit 1)
7 ｽｷｬﾅｰﾕﾆｯﾄ 2 (Scanner unit 2)
8 ﾗﾝﾌﾟ ﾕﾆｯﾄ (Lamp unit)
9 ｽｷｬﾅｰ連結ﾕﾆｯﾄ (Scanner joint unit)
10 ｶｾｯﾄﾕﾆｯﾄ (Casette unit)
11 給紙ﾕﾆｯﾄ (Paper feed unit)
12 給紙駆動ﾕﾆｯﾄ (Paper feeding drive unit)
13 ﾏﾙﾁ手差しﾕﾆｯﾄ 1 (Multi manual paper feeding unit 1)
14 ﾏﾙﾁ手差しﾕﾆｯﾄ 2 (Multi manual paper feeding unit 2)
15 ﾏﾙﾁ手差しﾕﾆｯﾄ 3 (Multi manual paper feeding unit 3)
16 縦搬送ｶﾞｲﾄﾞﾕﾆｯﾄ (Vertical transport guide unit)
17 ｶｾｯﾄｶﾞｲﾄﾞ R・縦搬送下ﾕﾆｯﾄ
(Cassette guide R / Vertical transport lower unit)
18 PS ﾕﾆｯﾄ (PS unit)
19 転写ﾍﾞﾙﾄﾕﾆｯﾄ 1 (Transfer belt unit 1)
20 転写ﾍﾞﾙﾄﾕﾆｯﾄ 2 (Transfer belt unit 2)
21 転写ﾘﾌﾄｱｯﾌﾟﾕﾆｯﾄ (Transfer lift-up unit)
22 ﾌﾟﾛｾｽﾕﾆｯﾄ (Process unit)
23 ﾄﾞﾗﾑ駆動ﾕﾆｯﾄ (Drum drive unit)
24 定着ﾕﾆｯﾄ 1 (Fusing unit 1)
25 定着ﾕﾆｯﾄ 2 (Fusing unit 2)
26 定着駆動ﾕﾆｯﾄ (Fusing drive unit)
27 左ﾄﾞｱ (Left door)
28 FD 排紙ﾕﾆｯﾄ (FD delivery unit)
29 ﾌﾚｰﾑ 1 (Frame 1)
30 ﾌﾚｰﾑ 2 (Frame 2)
31 ﾌﾚｰﾑ 3 (Frame 3)
32 転写挿入ｶﾞｲﾄﾞ (Transfer insert guide)
33 ﾀﾞｸﾄﾕﾆｯﾄ (Duct unit)
34 ｺﾝﾄﾛｰﾗ BOX (Control box)
35 配線部 (Wiring section)
36 梱包材＆付属品 (Packing Material & Accessories)
37 FAX BOX unit [AR-C260F/C260FP]
38 ﾌﾟﾘﾝﾀｺﾝﾄﾛｰﾗ部 (Printer controler section)
[AR-C260M/C260FP]
39 RADF 外装部 (RADF Exteriors) [AR-C260F/C260FP]
40 RADF 給紙部 1 (RADF Paper feedig section 1)
[AR-C260F/C260FP]
41 RADF 給紙部 2 (RADF Paper feedig section 2)
[AR-C260F/C260FP]
42 RADF 給紙駆動部 (RADF Paper feedig drive section)
[AR-C260F/C260FP]
43 RADF 排紙部 1 (RADF Delivery section 1)
[AR-C260F/C260FP]
44 RADF 排紙部 2 (RADF Delivery section 2)
[AR-C260F/C260FP]
45 RADF 搬送部 (RADF Transport section)
[AR-C260F/C260FP]
46 RADF 搬送駆動部 (RADF Transport drive section)
[AR-C260F/C260FP]
47 RADF 台板ﾕﾆｯﾄ (RADF Base plate unit)
[AR-C260F/C260FP]
48 RADF 配線部 (RADF Wiring section)
[AR-C260F/C260FP]
49 ﾓﾃﾞﾑｺﾝﾄﾛｰﾙ 基板 (Modem control PWB)
[AR-C260F/AR-C260FP]
50 TEL/LIU 基板 (TEL/LIU PWB)
[AR-C260F/AR-C260FP]
51 PCU 基板 (PCU PWB)
52 MFPC2 基板 (MFPC2 PWB)
53 ICU 基板 (ICU PWB)
54 操作ｷｰ基板 (OPE KEY PWB)
55 ﾄﾞﾗｲﾊﾞｰ基板 (DRIVER PWB)
56 LVDS/INV 基板 (LVDS/INV PWB)
57 FAX 電源基板ﾕﾆｯﾄ (FAX AC power supply unit)
[AR-C260F/C260FP]
58 PRTC 基板 (PRTC PWB) [AR-C260M/AR-C260FP]
■ 索引 (Index)

本書はサービス活動用に作成した資料です。
一部内容が製品の改良・改善等により予告なしに変わることがあります。

SHARP CORPORATION

This document has been published to be used for after sales service only.
The contents are subject to change without notice.

補修部品のランク付

市場における補修部品の在庫管理が、適正に運営出来る手助けとなることを、目的とします。

Aランク ： メンテナンスパーツ、メンテナンスパーツには入っていないがメンテナンスパーツに近い消耗パーツ。
Bランク ： 性能・機能パーツ（センサー、クラッチ等の電気パーツ）、消耗パーツ。
Eランク ： 基板含むユニットパーツ。
Dランク ： 整備パーツ（外装、パッキング、同梱パーツ）。
Cランク ： 上記ランク以外のパーツ（基板の子部品を除いたもの）。

DEFINITION

Rank A : Maintenance parts, and consumable parts which are not included in but closely related to maintenance parts
Rank B : Performance/function parts (sensors, clutches, and other electrical parts), consumable parts
Rank E : Unit parts including PWB
Rank D : Preparation parts (External fitting, packing, parts packed together)
Rank C : Parts other than the above (excluding sub components of PWB)

安全性・信頼性確保のため部品は、必ず正規のものをご使用下さい。
⚠ 印の商品は、安全上重要な部品です。交換をする時は、安全及び性能維持のため必ず指定の部品をご使用下さい。

Because parts marked with "⚠" is indispensable for the machine safety maintenance and operation, it must be replaced with the parts specific to the product specification.

○ 当モデルのサービス資料には、この資料以外にサービスマニュアル（回路図含む）があります。合わせてご利用下さい。
○ Other than this Parts Guide, please refer to documents Service Manual (including Circuit Diagram) of this model.
○ Please use the 13 digit code described in the right hand corner of front cover of the document, when you place an order.
○ For U.S. only-Use order codes provided in advertising literature. Do not order from parts department.

＊ These parts are supplied by SMF

---

1 外装 1(Exteriors 1)

NO.	PARTS CODE	PRICE RANK Ex.	PRICE RANK Ja.	NEW MARK	PART RANK	DESCRIPTION		
1	GCAB-1018FCZ5	BF	FG	N	D	Delivery tray cabinet right	(100V Series)	排紙ﾄﾚｲｷｬﾋﾞ右
	GCAB-1018FCZZ	AY	FQ	N	D	Delivery tray cabinet right	(200V Series)	排紙ﾄﾚｲｷｬﾋﾞ右
2	XJBSE40P12000	AA	DD	N	C	Screw(4×12)		ﾋﾞｽ
3	GCAB-0988FCZ5	BC	GJ	N	D	Delivery tray cabinet	(100V Series)	排紙ﾄﾚｲｷｬﾋﾞ
	GCAB-0988FCZZ	BE	GN	N	D	Delivery tray cabinet	(200V Series)	排紙ﾄﾚｲｷｬﾋﾞ
4	XEBSE40P08000	AA	DD		C	Screw(4×8)		ﾋﾞｽ
6	GCAB-0987FCZ5	AV	FG	N	D	Left cabinet rear	(100V Series)	左ｷｬﾋﾞ後
	GCAB-0987FCZZ	AU	EZ	N	D	Left cabinet rear	(200V Series)	左ｷｬﾋﾞ後
7	PFTA-0141FCZ5	AK	DX	N	D	Left cabinet rear cover	(100V Series)	左ｷｬﾋﾞ後蓋
	PFTA-0141FCZZ	AH	DX	N	D	Left cabinet rear cover	(200V Series)	左ｷｬﾋﾞ後蓋
8	GCAB-0993FCZZ	BA	FX	N	D	Rear cabinet		後ｷｬﾋﾞ
9	LPLTM6092FCZ1	AM	EG	N	C	CONT back fixing plate	(AR-C260/C260S/C260F)	CONT 背面ﾌﾟﾚｰﾄ
10	GCAB-0992FCZ5	AT	EZ	N	D	Right cabinet rear	(100V Series)	右ｷｬﾋﾞ後
	GCAB-0992FCZZ	AV	FG	N	D	Right cabinet rear	(200V Series)	右ｷｬﾋﾞ後
11	PFTA-0142FCZZ	AE	DS	N	D	Right cabinet rear cover		右ｷｬﾋﾞ後蓋
12	PCOVP1703FCZ5	AP	EQ	N	C	DC power supply CFM fixing cover	(100V Series)	DC 電源 CFM 取付けｶﾊﾞｰ
	PCOVP1703FCZZ	AP	EQ	N	C	DC power supply CFM fixing cover	(200V Series)	DC 電源 CFM 取付けｶﾊﾞｰ
13	GCAB-0991FCZ5	AS	EQ	N	D	Right cabinet upper	(100V Series)	右ｷｬﾋﾞ上
	GCAB-0991FCZZ	AR	EQ	N	D	Right cabinet upper	(200V Series)	右ｷｬﾋﾞ上
15	GCAB-0990FCZ5	AM	EG	N	D	Right cabinet lower	(100V Series)	右ｷｬﾋﾞ下
	GCAB-0990FCZZ	AP	EQ	N	D	Right cabinet lower	(200V Series)	右ｷｬﾋﾞ下
16	GCAB-0989FCZ5	AT	EZ	N	D	Right cabinet front	(100V Series)	右ｷｬﾋﾞ前
	GCAB-0989FCZZ	AR	EQ	N	D	Right cabinet front	(200V Series)	右ｷｬﾋﾞ前
17	PMAGT0015FCZZ	AD	DJ		C	Magnet catch(10P)		MG ｷｬｯﾁ
18	GCAB-0980FCZ5	BA	FX	N	D	Front frame cover		前ﾌﾚｰﾑｶﾊﾞｰ
19	GCAB-0985FCZ5	AP	EQ	N	D	Front cabinet lower	(100V Series)	前ｷｬﾋﾞ下
	GCAB-0985FCZZ	AQ	EQ	N	D	Front cabinet lower	(200V Series)	前ｷｬﾋﾞ下
20	CBDGD0043FC04	AR	EQ	N	C	Front cabinet badge	[AR-C260S]	前ｷｬﾋﾞﾊﾞｯｼﾞ
	CBDGD0043FC05	AQ	EQ	N	C	Front cabinet badge	[AR-C260F]	前ｷｬﾋﾞﾊﾞｯｼﾞ
	CBDGD0043FC03	AQ	EQ	N	C	Front cabinet badge	[AR-C260FP]	前ｷｬﾋﾞﾊﾞｯｼﾞ
	CBDGD0043FC02	AP	EQ	N	C	Front cabinet badge	[AR-C260M]	前ｷｬﾋﾞﾊﾞｯｼﾞ
	CBDGD0043FC01	AQ	EQ	N	C	Front cabinet badge	[AR-C260]	前ｷｬﾋﾞﾊﾞｯｼﾞ
21	GCAB-0984FCZ5	BM	HR	N	D	Front cabinet	(100V Series)	前ｷｬﾋﾞ
	GCAB-0984FCZZ	BA	FX	N	D	Front cabinet	(200V Series)	前ｷｬﾋﾞ
22	LPLTM5027FCZZ	AC	DJ		C	Magnet catch plate S		MG ｷｬｯﾁﾌﾟﾚｰﾄ S
23	LBNDZ0069FCZZ	AD	DJ		C	Band		ﾊﾞﾝﾄﾞ
24	XHBSE40P08000	AA	DD		C	Screw(4×8)		ﾋﾞｽ
25	XEBSE30P08000	AA	DD		C	Screw(3×8)		ﾋﾞｽ
26	LPiN-0277FCZZ	AB	DJ		C	Slide pin		ｽﾗｲﾄﾞﾋﾟﾝ
27	NFANP0070FCZZ	AZ	FX	N	B	PS cooling fan		電源冷却ﾌｧﾝ
28	XEBSD40P30000	AA	DD		C	Screw(4×30)		ﾋﾞｽ
29	NFANP0071FCZZ	AZ	FX	N	B	Fan	(AR-C260/C260S/C260F)	ﾌｧﾝ
30	LHLDZ1547FCZZ	AD	DJ	N	C	Fan holder	(AR-C260/C260S/C260F)	ﾌｧﾝﾎﾙﾀﾞｰ
31	XHBSE30P06000	AA	DD		C	Screw(3×6)	(AR-C260/C260S/C260F)	ﾋﾞｽ
32	LX-BZ0901FCZZ	AC	DD		C	Screw	(AR-C260/C260S/C260F)	ﾋﾞｽ
33	TLABZ4742FCZZ	AL	EB	N	C	Color mark label		ｶﾗｰﾏｰｸﾗﾍﾞﾙ

1 外装 1(Exteriors 1)

NO.	PARTS CODE	PRICE RANK		NEW MARK	PART RANK	DESCRIPTION		
		Ex.	Ja.					
34	PCOVP1618FCZ1	AH	DX	N	D	ROM cover		ROM ｶﾊﾞｰ
35	XHBSE30P08000	AA	DD		C	Screw(3×8)		ﾋﾞｽ
36	PCOVP1623FCZ1	AH	DX	N	D	FAX connector cover	[Except AR-C260F/C260FP]	FAX ｺﾈｸﾀｶﾊﾞｰ
37	PMLT-1316FCZZ	AC	DJ	N	C	Sub ozone filter cushion		ｻﾌﾞｵｿﾞﾝﾌｨﾙﾀｰﾓﾙﾄ
38	PFiLZ0296FCZZ	AQ	EQ	N	A	Sub ozone filter		ｻﾌﾞｵｿﾞﾝﾌｨﾙﾀｰ
39	PCOVP1706FCZ5	AE	DJ	N	C	Sub ozone filter cover	(100V Series)	ｻﾌﾞｵｿﾞﾝﾌｨﾙﾀｰｶﾊﾞｰ
	PCOVP1706FCZZ	AE	DS	N	C	Sub ozone filter cover	(200V Series)	ｻﾌﾞｵｿﾞﾝﾌｨﾙﾀｰｶﾊﾞｰ
40	LX-NZ0088FCZZ	AC	DD		C	Nut		ﾅｯﾄ
41	TLABZ4047FCZZ	AC	DJ		C	Enagy star label	(Japan,U.Kingdom, Australia,New Zealand,Germany)	ｴﾅｼﾞｰｽﾀｰﾗﾍﾞﾙ
42	TCAUA0770FCZZ	AB	DD		C	Service cautions label	(Except Japan)	ｻｰﾋﾞｽ注意ﾗﾍﾞﾙ
43	TLABF2705FCZZ	AB	DD		C	FCC conformity label A,B	(U.S.A,Canada)	FCC 適合ﾗﾍﾞﾙ A,B
45	TLABH4186FCZZ	AE	DS		C	Class A VCCI label	(Japan only)	ｸﾗｽ A VCCI ﾗﾍﾞﾙ
47	TLABS4306FCZZ	AC	DJ		C	Noise label class A	(U.S.A,Canada)	ﾉｲｽﾞﾗﾍﾞﾙｸﾗｽ A
48	TLABZ4694FCZZ	AF	DS		C	Imagery label	(U.S.A only)	ｲﾒｰｼﾞｬｰﾗﾍﾞﾙ
49	TLABZ4720FCZZ	AC	DJ		C	Heater SW label	(Japan only)	ﾋｰﾀｰｽｲｯﾁﾗﾍﾞﾙ
50	TLABZ0059QSZZ	AE	DJ		C	ECP label	(Canada only)	ECP ﾗﾍﾞﾙ

1 外装 1(Exteriors 1)

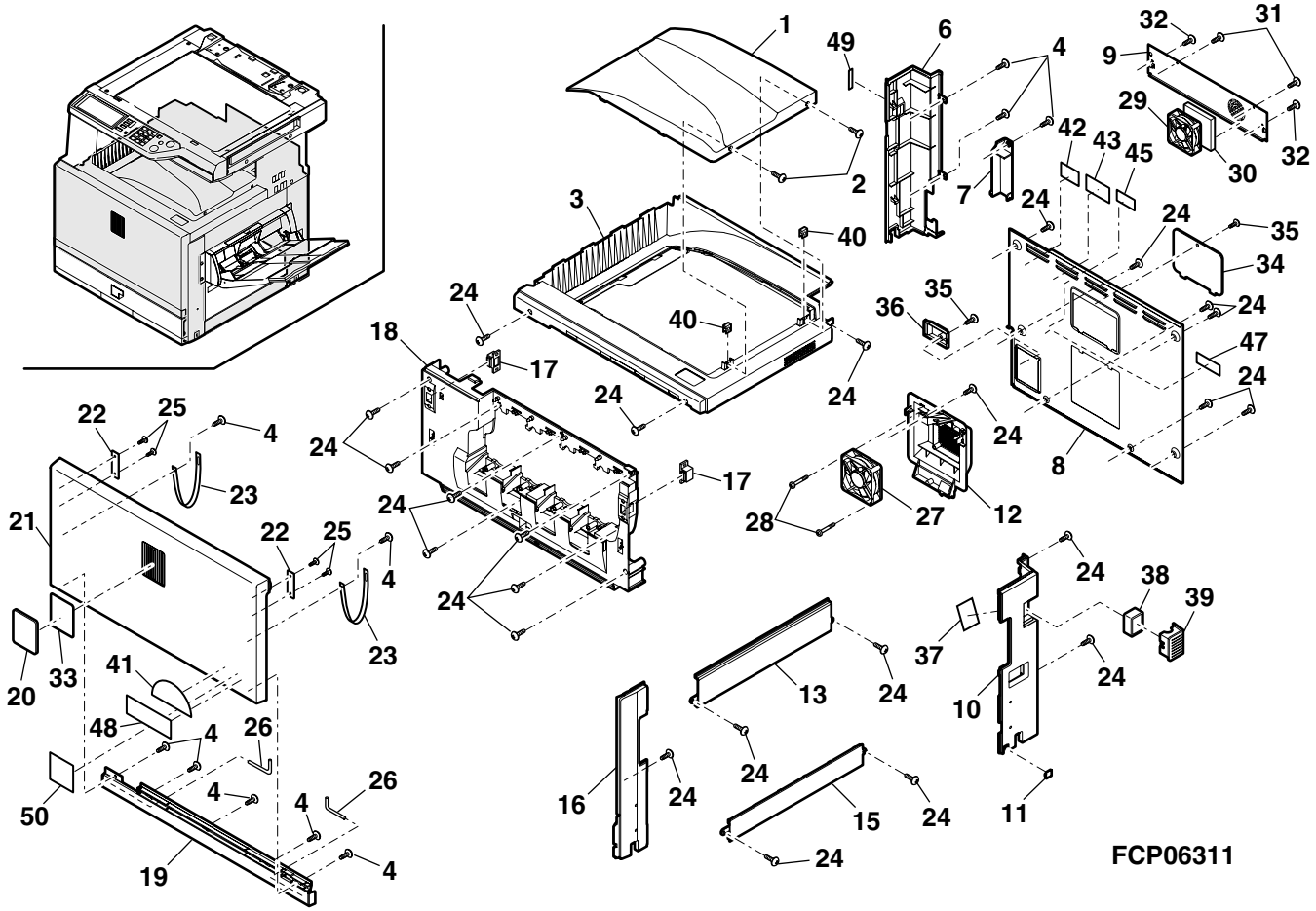

2 外装 2(Exteriors 2)

NO.	PARTS CODE	PRICE RANK Ex.	PRICE RANK Ja.	NEW MARK	PART RANK	DESCRIPTION
1	GCAB-0995FCZ5	AQ	EQ	N	D	Upper cabinet left (100V Series) 上ｷｬﾋﾞ左
	GCAB-0995FCZZ	AR	EQ	N	D	Upper cabinet left (200V Series) 上ｷｬﾋﾞ左
2	CFiX-0571FC01	AY	FQ	N	D	Glass fixing left (Japan only) ｶﾞﾗｽ押え左
	CFiX-0571FC02	AN	EQ	N	D	Glass fixing left (Except Japan)[AB Series] ｶﾞﾗｽ押え左
	CFiX-0571FC03	AN	EQ	N	D	Glass fixing left (Except Japan)[Inch Series] ｶﾞﾗｽ押え左
3	GCAB-0998FCZ5	AP	EQ	N	D	Upper cabinet rear left (100V Series) 上ｷｬﾋﾞ後左
	GCAB-0998FCZZ	AG	DX	N	D	Upper cabinet rear left (200V Series) 上ｷｬﾋﾞ後左
4	LFiX-0572FCZ5	AS	EQ	N	D	Glass fixing right (100V Series) ｶﾞﾗｽ押え右
	LFiX-0572FCZZ	AK	DX	N	D	Glass fixing right (200V Series) ｶﾞﾗｽ押え右
5	GCAB-0994FCZ5	BA	FX	N	D	Upper cabinet right (100V Series) 上ｷｬﾋﾞ右
	GCAB-0994FCZZ	AR	EQ	N	D	Upper cabinet right (200V Series) 上ｷｬﾋﾞ右
6	GCAB-0996FCZ5	AW	FG	N	D	Upper cabinet rear upper (100V Series) 上ｷｬﾋﾞ後上
	GCAB-0996FCZZ	AW	FG	N	D	Upper cabinet rear upper (200V Series) 上ｷｬﾋﾞ後上
7	GCAB-0997FCZ5	AP	EQ	N	D	Upper cabinet rear lower (100V Series) 上ｷｬﾋﾞ後下
	GCAB-0997FCZZ	AQ	EQ	N	D	Upper cabinet rear lower (200V Series) 上ｷｬﾋﾞ後下
8	PFTA-0134FCZ1	AE	DS	N	C	Connector cover W ｺﾈｸﾀｰ蓋 W
9	GCAB-0999FCZ5	AG	DX	N	D	Upper cabinet rear right (100V Series) 上ｷｬﾋﾞ後右
	GCAB-0999FCZZ	AH	DX	N	D	Upper cabinet rear right (200V Series) 上ｷｬﾋﾞ後右
10	PCOVP1646FCZZ	AG	DX	N	D	Ozone filter cover ｵｿﾞﾝﾌｨﾙﾀｰｶﾊﾞｰ
11	GCAB-1023FCZ5	BC	EQ	N	D	Rear joint cabinet (100V Series) 後連結ｷｬﾋﾞ
	GCAB-1023FCZZ	AT	EZ	N	D	Rear joint cabinet (200V Series) 後連結ｷｬﾋﾞ
12	PGLSP0003QSZZ	BA	FX		D	Table glass ﾃｰﾌﾞﾙｶﾞﾗｽ
13	CGLSP0104DS51	AT	EZ	N	E	Shading glass unit ｼｪﾃﾞｨﾝｸﾞｶﾞﾗｽﾕﾆｯﾄ
15	GCAB-1019FCZ5	AV	FQ	N	D	Upper cabinet center (100V Series) 後ｷｬﾋﾞ中
	GCAB-1019FCZZ	AU	EZ	N	D	Upper cabinet center (200V Series) 後ｷｬﾋﾞ中
16	GCAB-1022FCZ5	AQ	EZ	N	D	Right joint cabinet B (100V Series) 右連結ｷｬﾋﾞ B
	GCAB-1022FCZZ	AU	EZ	N	D	Right joint cabinet B (200V Series) 右連結ｷｬﾋﾞ B
17	GCAB-1020FCZ5	AL	DX	N	D	Rear cabinet center (100V Series) 右ｷｬﾋﾞ中
	GCAB-1020FCZZ	AH	DX	N	D	Rear cabinet center (200V Series) 右ｷｬﾋﾞ中
18	GCAB-1025FCZ5	AZ	EQ	N	D	Front cabinet upper (100V Series) 前ｷｬﾋﾞ上
	GCAB-1025FCZZ	AR	EQ	N	D	Front cabinet upper (200V Series) 前ｷｬﾋﾞ上
19	GCAB-0982FCZ5	AU	FG	N	D	FD delivery enter cabinet (100V Series) FD 排紙口ｷｬﾋﾞ
	GCAB-0982FCZZ	AS	EQ	N	D	FD delivery enter cabinet (200V Series) FD 排紙口ｷｬﾋﾞ
20	GCAB-1024FCZ5	AU	FQ	N	D	FD joint cabinet (100V Series) FD 連結ｷｬﾋﾞ
	GCAB-1024FCZZ	AX	FG	N	D	FD joint cabinet (200V Series) FD 連結ｷｬﾋﾞ
21	PFTA-0144FCZZ	AE	DJ	N	D	Card reader cover ｶｰﾄﾞﾘｰﾀﾞｰ蓋
22	XHBSE30P08000	AA	DD		C	Screw(3×8) ﾋﾞｽ
23	XHBSE40P08000	AA	DD		C	Screw(4×8) ﾋﾞｽ
24	XBTSE40P06000	AA	DD		C	Screw(4×6) ﾋﾞｽ
25	XEBSE40P08000	AA	DD		C	Screw(4×8) ﾋﾞｽ
26	TLABH4748FCZZ	AF	DS	N	C	Copy prohibition caution label (Japan only) ｺﾋﾟｰ禁止注意ﾗﾍﾞﾙ
	TLABH4749FCZZ	AE	DJ	N	C	Copy prohibition caution label (Canada only) ｺﾋﾟｰ禁止注意ﾗﾍﾞﾙ
27	XEBSD40P10000	AA	DD		C	Screw(4×10) ﾋﾞｽ
30	PCOVP0911FCZ2	AD	DJ	N	D	Upper exterior rear cover R (AR-C260F/C260FP/C260,C260M[U.S.A,CANADA,Australia,Europe]) 上ｷｬﾋﾞ後ｶﾊﾞｰ R
31	PCOVP0941FCZ2	AD	DJ	N	D	Upper exterior rear cover L (AR-C260F/C260FP/C260,C260M[U.S.A,CANADA,Australia,Europe]) 上ｷｬﾋﾞ後ｶﾊﾞｰ L
32	LX-BZ0776FCZZ	AG	DS		C	Screw (AR-C260F/C260FP) ﾀﾞﾝﾈｼﾞ R

3 原稿検知ﾕﾆｯﾄ (Document detect unit)

NO.	PARTS CODE	PRICE RANK Ex.	PRICE RANK Ja.	NEW MARK	PART RANK	DESCRIPTION
1	NSFTZ1805FCZZ	AE	DS		C	Original detection fulcrum shaft 原稿検知支点ｼｬﾌﾄ
2	XRESP30-06000	AA	DD		C	E type ring E-ﾘﾝｸﾞ
3	MSPRT1563FCZZ	AC	DD		C	Original detect spring 原稿検知ｽﾌﾟﾘﾝｸﾞ
4	XBPSD30P06KS0	AA	DD		C	Screw(3×6KS) ﾋﾞｽ
5	MARMP0148FCZ2	AK	DX		C	Original detector arm lower T 原稿検知ｱｰﾑ下 T
6	PSLDH0178FCZZ	AD	DJ		C	Original detect shield plate 原稿検知遮光板
7	CPWBF1453FCE1	AX	FG		E	ORS emission PWB 原稿検知発光基板
8	LHLDZ1085FCZ2	AD	DJ		C	Holder ﾎﾙﾀﾞｰ
9	LBSHZ1102CCZZ	AC	DD		C	Rubber roller bushing 1 ｺﾞﾑﾛｰﾗｰ 1 ﾌﾞｯｼﾝｸﾞ
10	MARMP0147FCZ2	AK	DX		C	Original detector arm upper T 原稿検知ｱｰﾑ上 T
11	XEPSD30P05000	AA	DD		C	Screw(3×5) ﾋﾞｽ
12	GCAB-0996FCZ5	AW	FG	N	D	Upper cabinet rear upper (100V Series) 上ｷｬﾋﾞ後上
	GCAB-0996FCZZ	AW	FG	N	D	Upper cabinet rear upper (200V Series) 上ｷｬﾋﾞ後上
13	XEBSD30P08000	AA	DD		C	Screw(3×8) ﾋﾞｽ
14	CARMP0147DS51	BA	FX		E	Original detector luminescence unit 原稿検知発光ﾕﾆｯﾄ

2 外装 2(Exteriors 2)

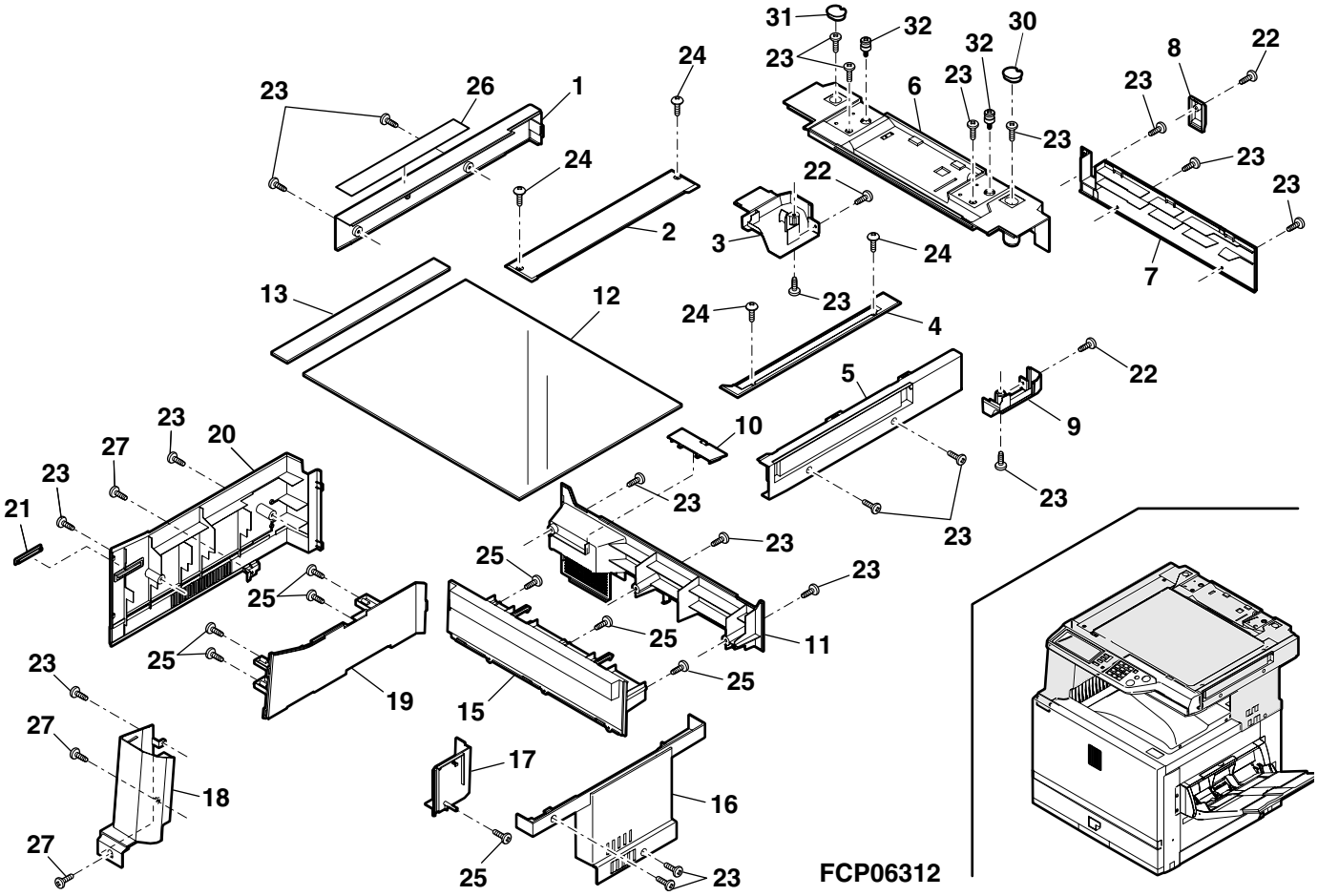

3 原稿検知ﾕﾆｯﾄ (Document detect unit)

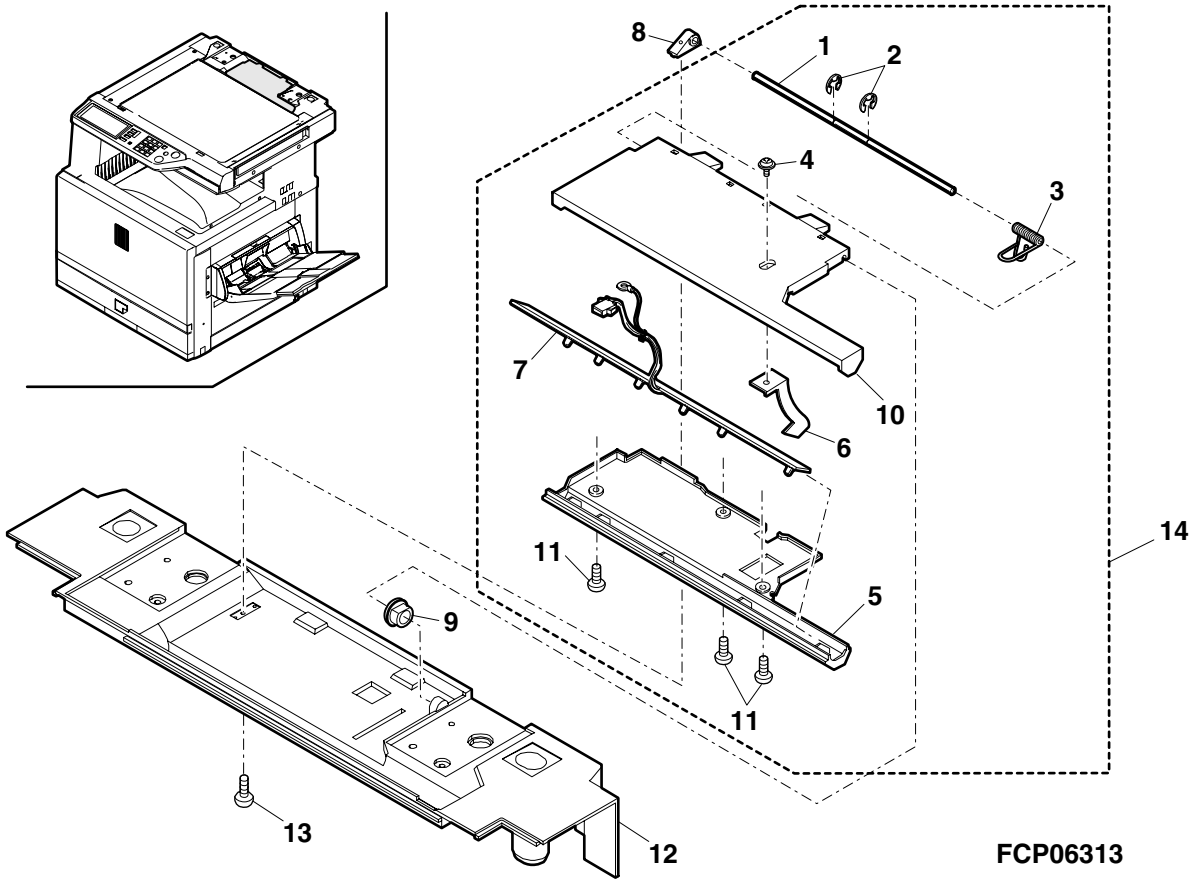

4 操作部 (Operation panel section)

NO.	PARTS CODE	PRICE RANK Ex.	PRICE RANK Ja.	NEW MARK	PART RANK	DESCRIPTION	
1	LDAiU0646FCZ5	BF	GN	N	C	Operation base	(100V Series) 操作台板
	LDAiU0646FCZZ	AX	FG	N	C	Operation base	(200V Series) 操作台板
2	XEBSE40P08000	AA	DD		C	Screw(4×8)	ﾋﾞｽ
3	CPWBF1525FCE1	BD	GJ	N	E	Operation key PWB	操作ｷｰ基板
4	XEPSD30P08000	AA	DD		C	Screw(3×8)	ﾋﾞｽ
5	CPWBN1560FCE1	BM	HR	N	E	LVDS/INV PWB	LVDS/INV 基板
6	LHLDZ1459FCZZ	AE	DS		C	LCD holder B	LCD ﾎﾙﾀﾞｰB
7	VVLLM065HB1−1	CB	TX		B	LCD(LLM065HB1)	LCD
8	QCNW−0214FCZZ	AD	DJ	N	C	OP-LCD FFC	OP-LCD FFC
9	LHLDZ1458FCZZ	AF	DS		C	LCD holder A	LCD ﾎﾙﾀﾞｰA
10	HPNLH0249FCZZ	BF	GN		C	Touch panel N	ﾀｯﾁﾊﾟﾈﾙ N
11	CBTN−0253FC01	AN	EG		D	Change key	切り替えｷｰ
12	CBTN−0252FC01	AP	EQ		D	Ten key	ﾃﾝｷｰ
13	HPNLC0247FCZ5	BD	GN	N	C	Operation panel A	(100V Series) 操作ﾊﾟﾈﾙ A
	HPNLC0247FCZZ	AV	FG	N	C	Operation panel A	(200V Series) 操作ﾊﾟﾈﾙ A
14	LPLTM2573FCZ1	AD	DJ		C	MG Plate	MG ﾌﾟﾚｰﾄ
15	XHSSE30P10000	AA	DD		C	Screw(3×10)	ﾋﾞｽ
16	CPNLC0248FC01	AU	FG	N	D	Operation panel B	(AR-C260S/C260M[JAPAN]) 操作ﾊﾟﾈﾙ B
	CPNLC0248FC03	AU	GN	N	D	Operation panel B	(AR-C260F/C260FP) 操作ﾊﾟﾈﾙ B
	CPNLC0248FC02	AV	FG	N	D	Operation panel B	(AR-C260/C260M[Except JAPAN]) 操作ﾊﾟﾈﾙ B
17	LPiNS0014QSCZ	AF	DS	N	C	Pin	ﾋﾟﾝ
18	LPiNS0014QSBZ	AF	DS	N	C	Pin	ﾋﾟﾝ
19	PSHEZ5065FCZZ	AQ	EQ	N	C	Copy key sheet W	ｺﾋﾟｰｷｰ用ｼｰﾄW
20	CBTN−0260FC01	AE	DX	N	D	C key	Cｷｰ
21	CBTN−0261FC01	AK	DJ	N	D	CA key	CAｷｰ
22	PFiLW0294FCZZ	AE	DS	N	C	Copy key filter	ｺﾋﾟｰｷｰｽﾓｰｸ
23	CBTN−0256FC02	AR	EQ	N	D	Color copy key	ｶﾗｰｺﾋﾟｰｷｰ
24	CBTN−0256FC03	AN	EG	N	D	Monochrome copy key	白黒ｺﾋﾟｰｷｰ
25	PSHEZ4906FCZZ	AC	DJ		C	Touch panel sheet	ﾀｯﾁﾊﾟﾈﾙｼｰﾄ
26	MSPRP3009FCZZ	AD	DJ		C	LCD earth spring	LCD 用ｱｰｽ板ﾊﾞﾈ
27	DHAi−3193FC11	AC	DJ	N	C	Panel earth harness	ﾊﾟﾈﾙｱｰｽﾊｰﾈｽ
28	PSHEP5006FCZZ	AE	DS	N	C	Panel sheet	ﾊﾟﾈﾙﾖｳｼｰﾄ
29	DHAi−3419FCZZ	AE	DS	N	C	OP-PD harness	OP-PD ﾊｰﾈｽ

4 操作部 (Operation panel section)

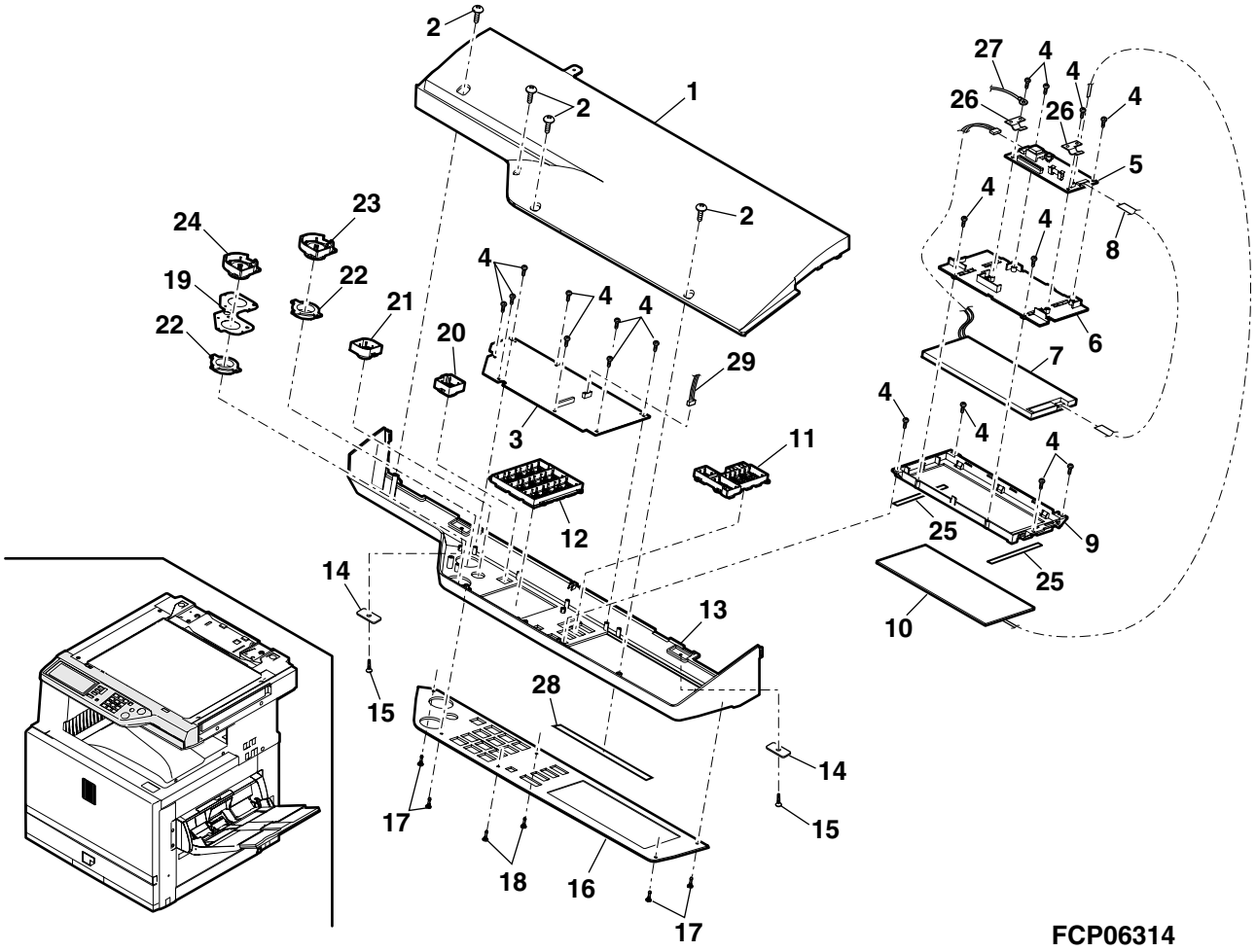

5 ｵﾘｼﾞﾅﾙｶﾊﾞｰﾕﾆｯﾄ (Original cover unit)
[AR-C260S/AR-C260,AR-C260M(Except U.S.A,Europe,Australia,New Zealand)]

NO.	PARTS CODE	PRICE RANK		NEW MARK	PART RANK	DESCRIPTION	
		Ex.	Ja.				
1	PSHEZ5059FCZZ	AU	EZ		D	OC sheet	OC ﾏｯﾄ
2	XJBSD40P12000	AA	DD		C	Screw(4×12)	ﾋﾞｽ
3	MHNG-0210FCZZ	AQ	EZ		C	OC hinge L	OC ﾋﾝｼﾞ L
4	MHNG-0211FCZZ	AQ	EZ		C	OC hinge R	OC ﾋﾝｼﾞ R
5	GCOVH0212FCZ2	BB	GD	N	D	Original cover R	ｵﾘｼﾞﾅﾙｶﾊﾞｰR
6	PSTK-0015FCZ2	AU	EZ	N	C	OR stocker	OR ｽﾄｯｶｰ
8	MHNG-0170FCZ1	AE	DS		C	OC cover hinge	OC ｶﾊﾞｰﾋﾝｼﾞ
9	LPiNS0280FCZZ	AD	DJ		C	OC cover hinge pin	OC ｶﾊﾞｰﾋﾝｼﾞﾋﾟﾝ
10	XJBSD40P08000	AA	DD		C	Screw(4×8)	ﾋﾞｽ
11	GCOVH0211FCZ2	BB	GD	N	D	Original cover F	ｵﾘｼﾞﾅﾙｶﾊﾞｰF
	(Unit)						
901	CCOVH0212FC34	BN	HV	N	D	OC unit	OC ﾕﾆｯﾄ

5 ｵﾘｼﾞﾅﾙｶﾊﾞｰﾕﾆｯﾄ (Original cover unit)
[AR-C260S/AR-C260,AR-C260M(Except U.S.A,Europe,Australia,New Zealand)]

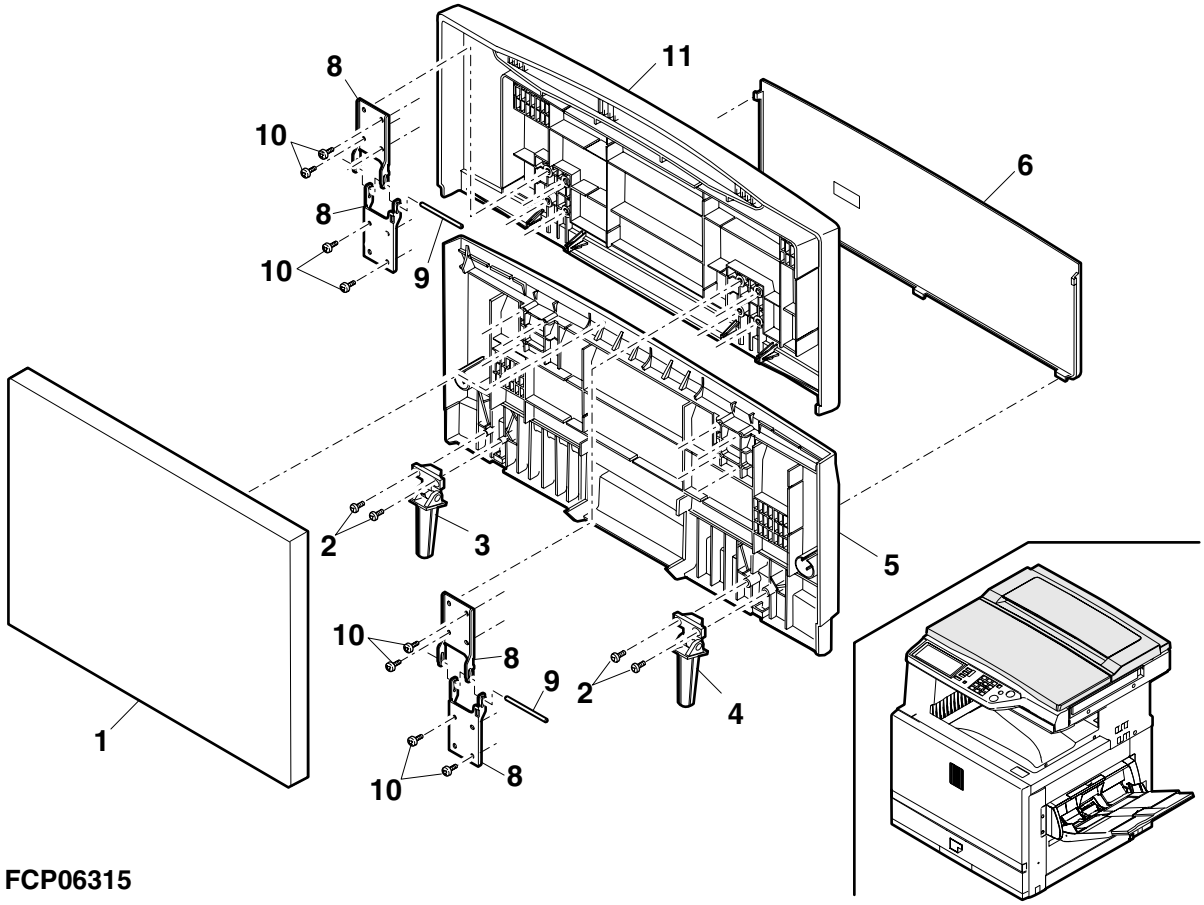

FCP06315

6 ｽｷｬﾅｰﾕﾆｯﾄ 1(Scanner unit 1)

NO.	PARTS CODE	PRICE RANK Ex.	PRICE RANK Ja.	NEW MARK	PART RANK	DESCRIPTION	
1	CPLTM5995DS51	CA	TV	N	E	Lens W unit	ﾚﾝｽﾞ W ﾕﾆｯﾄ
2	XHBSD30P08KS0	AB	DD	N	C	Screw(3×8KS)	ﾋﾞｽ
3	DHAi-3369FCZZ	AN	EG	N	C	MFP sensor harness	MFP ｾﾝｻｰﾊｰﾈｽ
4	PCOVP1631FCZZ	AP	EQ	N	C	Dark box cover	暗箱ｶﾊﾞｰ
5	XHBSD30P04000	AA	DD		C	Screw(3×4)	ﾋﾞｽ
6	XHBSE30P08000	AA	DD		C	Screw(3×8) (Japan only)	ﾋﾞｽ
7	XHBSD30P06000	AA	DD		C	Screw(3×6) (Japan only)	ﾋﾞｽ
8	VHi28F161L01F	BA	FX	N	C	MFP FLASH ROM(28F161L01F)	MFP ﾌﾗｯｼｭﾛﾑ
9	LBSHC0355FCZZ	AF	DS	N	C	Bushing(LES-1017)	ﾌﾞｯｼﾝｸﾞ
10	VHi28F162L01F	BD	GN	N	C	OPE FLASH ROM(28F162L01F)	OPE ﾌﾗｯｼｭﾛﾑ
11	VHPGP3A38//-1	AH	DX		B	Photo sensor(GP3A38)	ﾌｫﾄｾﾝｻｰ
12	XBBSD40P14000	AA	DD		C	Screw(4×14)	ﾋﾞｽ
13	LPLTM5989FCZZ	AQ	EQ	N	C	OC fixing plate	OC 取付けﾌﾟﾚｰﾄ
15	VHPGP1A22LC-1	AK	EB		B	Photo sensor(GP1A22LC)	ﾌｫﾄｾﾝｻｰ
16	XBBSD40P10000	AA	DD		C	Screw(4×10)	ﾋﾞｽ
17	LPLTM6096FCZZ	AF	DS	N	C	Connector fixing plate	ｺﾈｸﾀ取付けﾌﾟﾚｰﾄ
18	PSHEP5075FCZZ	AF	DS	N	C	Harness protect film N	ﾊｰﾈｽ保護ﾌｨﾙﾑ N
19	LANGF1423FCZZ	AH	DX	N	C	Support angle R	補強ｱﾝｸﾞﾙ R
20	XHBSD30P06000	AA	DD		C	Screw(3×6)	ﾋﾞｽ
21	XHBSE40P08000	AA	DD		C	Screw(4×8)	ﾋﾞｽ
22	CPWBN1519DS52	CX	**	N	E	MFPC2 PWB	MFPC2 基板
23	LPLTM5991FCZZ	AW	FG	N	C	MPF support plate	MPF 支持ﾌﾟﾚｰﾄ
24	PCUSS0374FCZZ	AE	DS	N	C	Protection cushion	ﾎﾞｳｼﾝｸｯｼｮﾝ
25	CDAiU0618FC02	BN	HV	N	C	Optical base	光学台板
26	LRALM0201FCZZ	AN	EG	N	C	MFP rail	MFP ﾚｰﾙ
27	PSHEZ4843FCZ1	AC	DJ		C	Harnes fixing sheet 3	ﾊｰﾈｽ押えｼｰﾄ3
28	PSHEP4932FCZ1	AC	DJ		C	Harness fixing sheet 4	ﾊｰﾈｽ押えｼｰﾄ4
29	PMLT-1298FCZ1	AE	DS	N	C	FFC cushion	FFC ﾓﾙﾄ
30	PCOVP1632FCZZ	AM	EG	N	C	FCC cover	FFC ｶﾊﾞｰ
31	RHETP0099FCZZ	AV	EQ	N	C	Dry heater (Japan only)	除湿ﾋｰﾀｰ
33	LBNDJ0002FCZZ	AA	DD		C	Wire fixing band(HP-4N) (Japan only)	ﾊﾞﾝﾄﾞ
34	LHLDW5031BCZZ	AA	DD		C	Clamp (Japan only)	ｹｰﾌﾞﾙﾎﾙﾀﾞｰ
35	PSHEZ4836FCZZ	AB	DJ		C	Screw protect sheet	ﾋﾞｽ保護ｼｰﾄ
36	QCNW-0197FCZZ	AL	EB	N	C	MFP-OP FFC	MFP-OP FFC
37	QCNW-0213FCZZ	AH	DX	N	C	OP-KEY FFC	OP-KEY FFC
	(Unit)						
901	DUNT-7248DSZZ	CM	UW	N	E	Scaner unit(Include Block 7)	ｽｷｬﾅｰﾕﾆｯﾄ(ﾌﾞﾛｯｸ7 含む)

6 ｽｷｬﾅｰﾕﾆｯﾄ 1(Scanner unit 1)

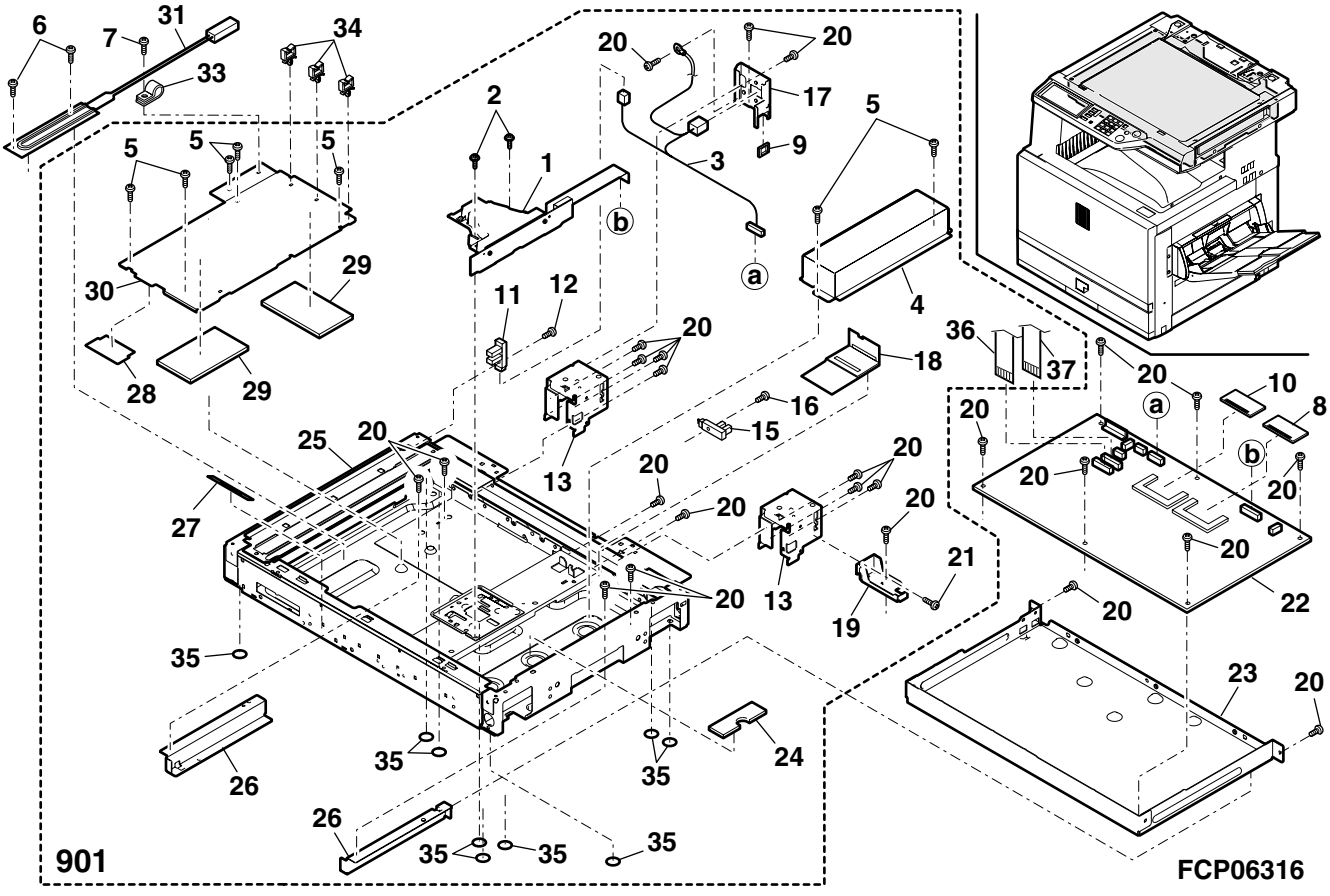

7 ｽｷｬﾅｰﾕﾆｯﾄ 2(Scanner unit 2)

NO.	PARTS CODE	PRICE RANK Ex.	PRICE RANK Ja.	NEW MARK	PART RANK	DESCRIPTION	
1	PWiR−0199FCZZ	AR	EQ	N	C	MB wire FW	MB ﾜｲﾔｰ FW
2	CHLDZ1446FC32	BH	HC	N	E	2nd.3rd mirror W unit	2.3 ﾐﾗｰ W ﾕﾆｯﾄ
3	XBBSD40P06000	AA	DD		C	Screw(4×6)	ﾋﾞｽ
4	LHLDZ1505FCZZ	AC	DJ		C	Wire holder	ﾜｲﾔｰﾎﾙﾀﾞｰ
5	PGiDM1890FCZZ	AC	DJ		C	CL guide	CL ｶﾞｲﾄﾞ
⚠ 6	CDAiU0619DS53	BR	LX	N	E	Lamp unit	ﾗﾝﾌﾟ ﾕﾆｯﾄ
7	PWiR−0200FCZZ	AR	EQ	N	C	MB wire RW	MB ﾜｲﾔｰ RW
9	LDAiU0610FCZZ	AE	DS		C	Harness fixing base	ﾊｰﾈｽ押えﾍﾞｰｽ
10	LFiX−0537FCZZ	AD	DJ		C	Harness fixing plate	ﾊｰﾈｽ押え
11	LBSHC0356FCZZ	AC	DJ	N	C	Bushing(T1.6)	ﾌﾞｯｼﾝｸﾞ
12	LX−BZ0324FCZZ	AA	DD		C	Screw	下ｸﾘｰﾅ用ﾋﾞｽ
13	NPLYZ0013QSZZ	AL	EB		C	Winding pulley PAN	巻取りﾌﾟｰﾘｰ PAN
14	XRESP70−08000	AA	DD		C	E type ring	E- ﾘﾝｸﾞ
15	LX−BZ0049FCZZ	AB	DD		C	Screw(M4×6W)	ﾑｼﾋﾞｽ
16	NSFTZ2694FCZZ	AP	EQ	N	C	Winder drive shaft	巻取り駆動軸
17	CSFTZ2694FC31	BA	FX	N	E	Winder drive shaft unit	巻取り駆動ｼｬﾌﾄﾕﾆｯﾄ
18	XHBSD30P06000	AA	DD		C	Screw(3×6)	ﾋﾞｽ
19	RMOTS0885FCZ1	BE	GN	N	B	Scanner motor	ｽｷｬﾅｰﾓｰﾀ
20	NBLTH0371FCZ1	AF	DS	N	B	Winder drive belt	巻取り駆動ﾍﾞﾙﾄ
21	MSPRT3098FCZZ	AC	DJ	N	C	Belt tension spring	ﾍﾞﾙﾄﾃﾝｼｮﾝｽﾌﾟﾘﾝｸﾞ
22	LPLTM5992FCZZ	AK	DX	N	C	Mirror motor fixing plate	ﾐﾗｰﾓｰﾀ取付けﾌﾟﾚｰﾄ
23	LBNDJ0043FCZ1	AA	DJ		C	Band(SG-130)	ﾊﾞﾝﾄﾞ
24	CDAiU0618FC02	BN	HV	N	C	Optical base	光学台板
25	PGUMS0283FCZ1	AA	DJ		C	Table glass rubber	ﾃｰﾌﾞﾙｶﾞﾗｽｺﾞﾑ
26	NBRGY0466FCZZ	AK	EB		C	Bearing(M8-M16)	ﾍﾞｱﾘﾝｸﾞ
28	XEPSD40P06000	AA	DD		C	Screw(4×6)	ﾋﾞｽ
29	CPWBF1454FCE1	BN	LE		E	ORS PD PWB	原稿検知受光基板
30	XHBSD40P06000	AA	DD		C	Screw(4×6)	ﾋﾞｽ
31	LHLDZ1381FCZZ	AL	EB		C	ORS PWB holder	受光基板ﾎﾙﾀﾞｰ
32	NPLYZ0005QSZZ	AG	DX		C	Pulley	定ﾌﾟ - ﾘ
33	NPLYZ0006QSZZ	AD	DJ		C	L pulley	L ﾌﾟ - ﾘ
34	XRESP40−05000	AA	DD		C	E type ring	E- ﾘﾝｸﾞ
35	LRALM0184FCZZ	AG	DX		C	MB-B rail R	MB-B ﾚｰﾙ R
36	LRALM0183FCZZ	AG	DX		C	MB-B rail F	MB-B ﾚｰﾙ F
37	LX−BZ0004QSZZ	AB	DD		C	Screw	ﾋﾞｽ
38	NPLYZ0401FCZZ	BB	GD	N	C	Pulley(50T)	ﾌﾟ - ﾘ -
39	TLABZ4335FCZZ	AB	DJ		C	High voltage caution label	高圧注意ﾗﾍﾞﾙ
	(Unit)						
901	DUNT−7248DSZZ	CM	UW	N	E	Scaner unit(Include Block 6 Without No.39)	ｽｷｬﾅｰﾕﾆｯﾄ (ﾌﾞﾛｯｸ 6 含む。No.39 除く)

7 ｽｷｬﾅｰﾕﾆｯﾄ 2(Scanner unit 2)

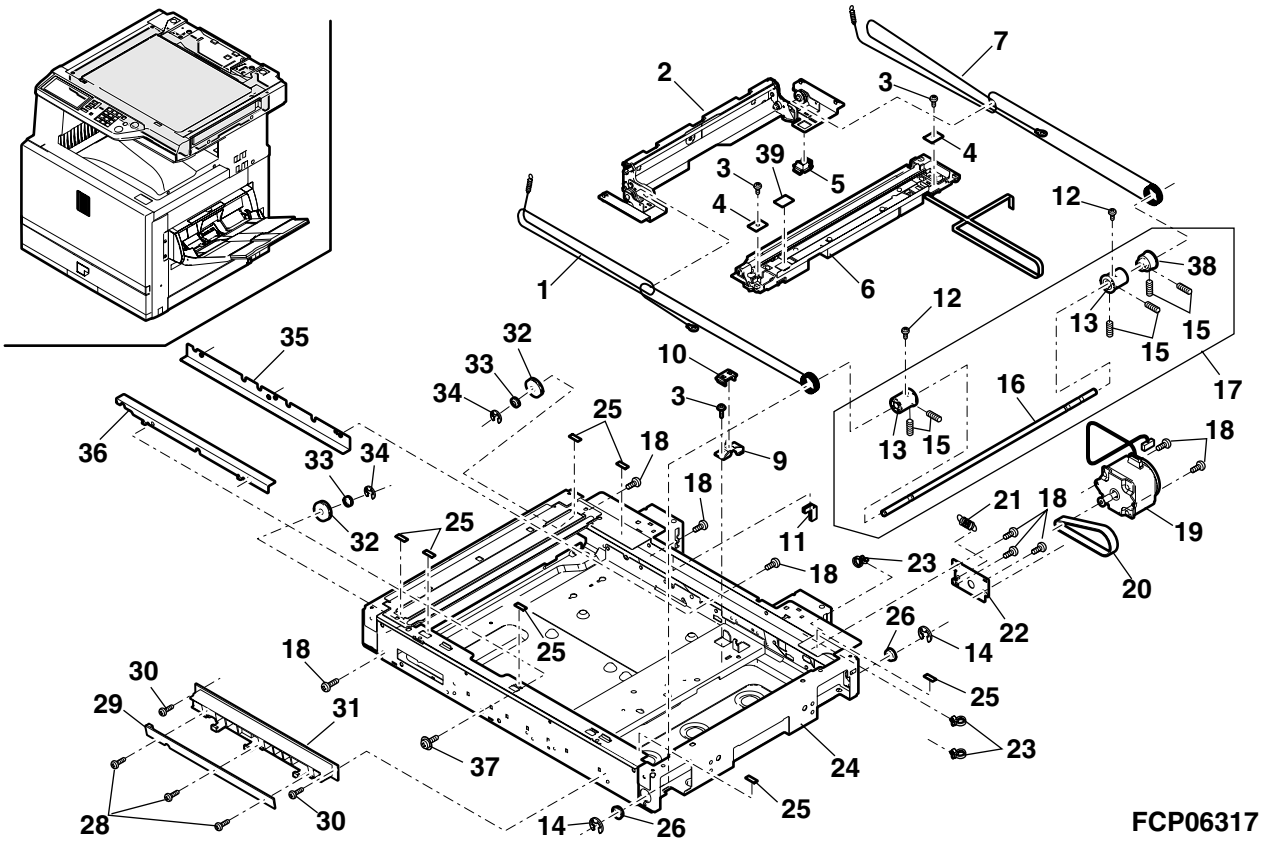

8 ﾗﾝﾌﾟﾕﾆｯﾄ (Lamp unit)

	NO.	PARTS CODE	PRICE RANK Ex.	PRICE RANK Ja.	NEW MARK	PART RANK	DESCRIPTION	
⚠	1	RLMPD0674FCZ1	BE	GN	N	B	Copy lanp W	ｷｾﾉﾝﾗﾝﾌﾟ W
	2	XEBSD30P08000	AA	DD		C	Screw(3×8)	ﾋﾞｽ
	3	PREFL0172FCZZ	AK	DX		C	Copy lamp reflector	ﾘﾌﾚｸﾀｰ
	4	XBPSD30P12XS0	AA	DD	N	C	Screw(3×12XS)	ﾋﾞｽ
	5	LDAiU0619FCZ1	AS	EQ		C	Lamp base	ﾗﾝﾌﾟﾍﾞｰｽ
	6	PCUSU0203FCZZ	AE	DS		C	Protection cushion	ﾎﾞｳｼﾝｸｯｼｮﾝ
	8	PSHEP5019FCZZ	AF	DS	N	C	Shading sheet	遮光ﾌｨﾙﾑ
	9	PCUSF0334FCZZ	AP	EQ		C	Mirror cushion	ﾐﾗｰｸｯｼｮﾝ
	10	MSLi−0138FCZZ	AC	DJ		C	Slider	ｽﾍﾟﾘ材
	11	LSTYM0261FCZZ	AB	DJ		C	Wire support plate	ﾜｲﾔｰ支持板
	12	MSPRP2825FCZZ	AC	DJ		C	Mirror spring	ﾐﾗｰｽﾌﾟﾘﾝｸﾞ
	13	PMiR−0164FCZZ	AP	EQ		C	1st mirror	第一ﾐﾗｰ
	14	CPWBF1523FC32	BF	GN	N	E	CL inverter PWB	CL ｲﾝﾊﾞｰﾀ基板
	15	QCNW−0199FCZZ	AE	DJ	N	C	MFP-LAMP FFC	MFP-LAMP FFC
	16	LFiX−0545FCZZ	AC	DJ		C	CL read harness fixing plate	CL ﾘｰﾄﾞﾊｰﾈｽ押え
		(Unit)						
⚠	901	CDAiU0619DS53	BR	LX	N	E	Lamp unit	ﾗﾝﾌﾟﾕﾆｯﾄ

8 ﾗﾝﾌﾟﾕﾆｯﾄ (Lamp unit)

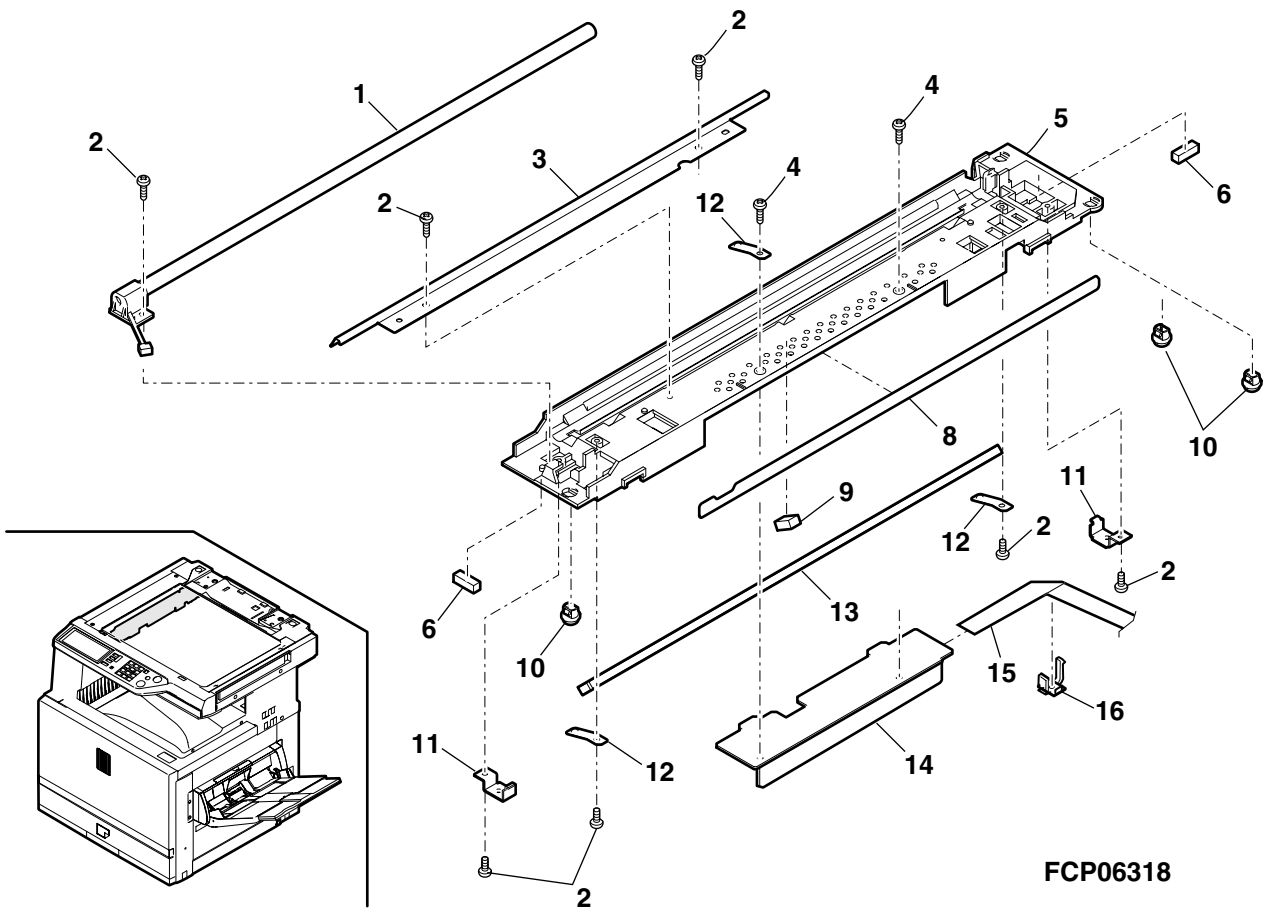

9 ｽｷｬﾅｰ連結ﾕﾆｯﾄ (Scanner joint unit)

NO.	PARTS CODE	PRICE RANK		NEW MARK	PART RANK	DESCRIPTION	
		Ex.	Ja.				
1	XHBSE40P08000	AA	DD		C	Screw(4×8)	ﾋﾞｽ
2	LPLTM6084FCZZ	AK	EB	N	C	Scaner joint plate Rear	ｽｷｬﾅ連結後ﾌﾟﾚｰﾄ
3	LPLTM6087FCZZ	AN	EG	N	C	Scaner joint plate IN	ｽｷｬﾅ連結ﾌﾟﾚｰﾄ IN
4	XHBSD30P08KS0	AB	DD	N	C	Screw(3×8KS)	ﾋﾞｽ
5	LPLTM6095FCZZ	AC	DJ	N	C	Scanner adjust plate	ｽｷｬﾅｰ調整ﾌﾟﾚｰﾄ
6	LX-BZ0880FCZZ	AB	DD		C	Screw	ﾋﾞｽ
7	LPLTM6083FCZZ	AV	FG	N	C	Scaner joint plate R	ｽｷｬﾅ連結右ﾌﾟﾚｰﾄ
9	LPLTM6085FCZZ	AN	EG	N	C	Scaner joint plate F	ｽｷｬﾅ連結前ﾌﾟﾚｰﾄ
10	LPLTM6082FCZZ	AT	EZ	N	C	Scaner joint plate L	ｽｷｬﾅ連結左ﾌﾟﾚｰﾄ
12	LPLTM6086FCZZ	AK	DX	N	C	Scaner joint plate V	ｽｷｬﾅ連結縦ﾌﾟﾚｰﾄ
13	LHLDW0595FCZZ	AC	DD		C	Edge saddle(EDS2)	ｴｯｼﾞｻﾄﾙ

9 ｽｷｬﾅｰ連結ﾕﾆｯﾄ (Scanner joint unit)

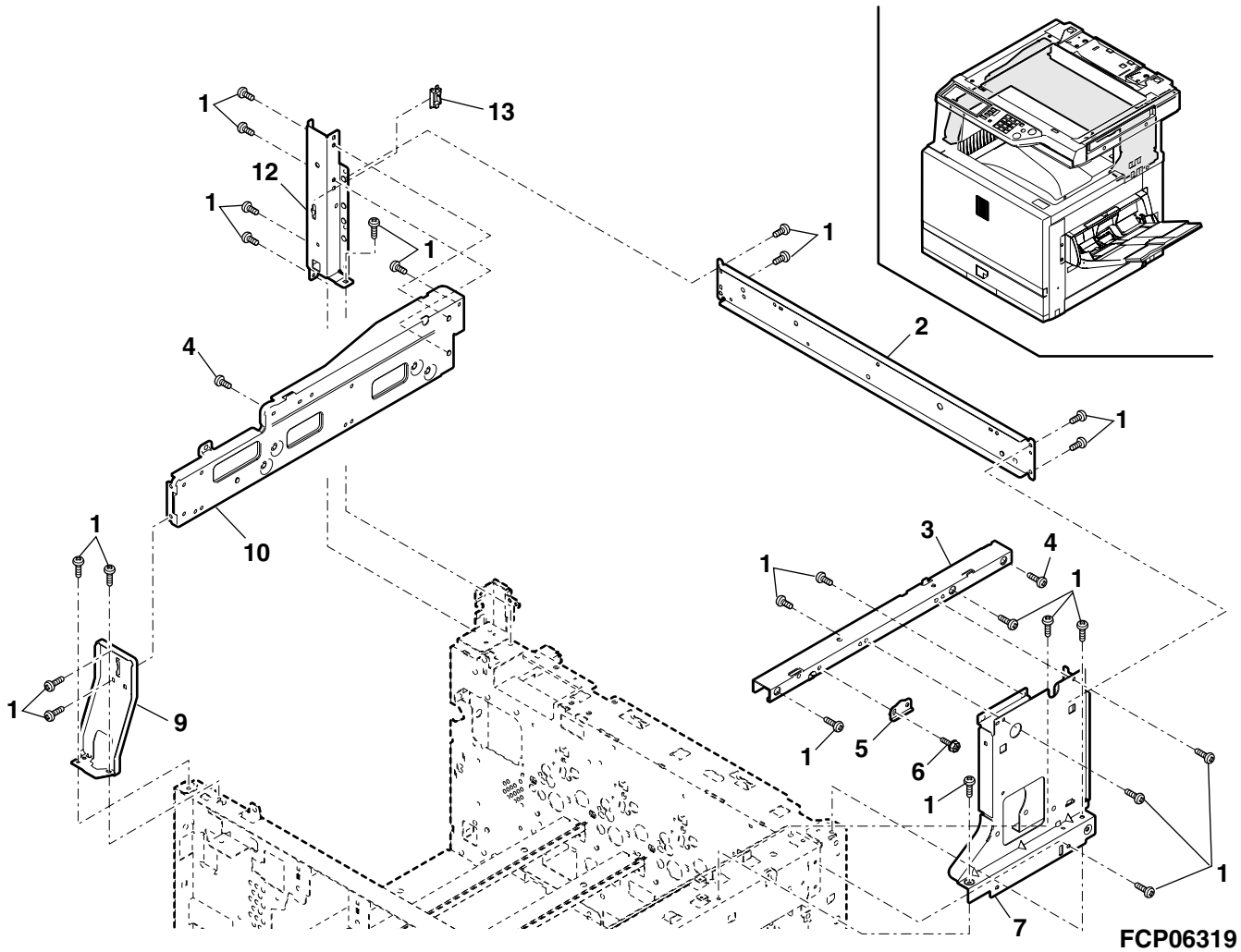

10 ｶｾｯﾄﾕﾆｯﾄ (Casette unit)

NO.	PARTS CODE	PRICE RANK Ex.	PRICE RANK Ja.	NEW MARK	PART RANK	DESCRIPTION	
1	JHNDP0164FCZ3	BL	HL	N	D	Tray Handle upper	ﾄﾚｲ取手上
2	XEBSE40P08000	AA	DD		C	Screw(4×8)	ﾋﾞｽ
3	PCOVP1643FCZ1	AU	EZ	N	D	Handle cover DSK upper	取手ｶﾊﾞｰDSK上
4	TLABZ4047FCZZ	AC	DJ		C	Enagy star label (U.S.A)	ｴﾅｼﾞｰｽﾀｰﾗﾍﾞﾙ
5	LPLTP5412FCZZ	AP	EQ		C	Side plate R	側板 R
6	LPLTM5414FCZ1	AR	EQ		C	Rotation plate	回転ﾌﾟﾚｰﾄ
7	PSHEZ3130FCZZ	AB	DD		C	Rotation plate sheet	回転ﾌﾟﾚｰﾄｼｰﾄｸﾗﾘｰﾉ
8	LX-BZ0884FCZZ	AB	DD		C	Pinion gear CGR	ﾋﾟﾆｵﾝｷﾞﾔCGR
9	LPiNS7062SCZZ	AA	DD		C	Pin(φ3-16)	ﾋﾟﾝ
10	NGERH0193FCZZ	AB	DD		C	Manual feed gear	手差しｷﾞﾔ
11	PGiDH1833FCZ1	AC	DJ		C	Side plate guide	側板ｶﾞｲﾄﾞ
12	PTPE-0243FCZ1	AC	DJ		C	Side plate tape N	側板両面ﾃｰﾌﾟ N
13	LPLTP5411FCZZ	AQ	EQ		C	Side plate F	側板 F
14	MLEVP0755FCZ1	AE	DJ		C	Side plate F lever	側板 F ﾚﾊﾞｰ
15	MSPRC2631FCZZ	AC	DJ		C	Side plate F lever spring	側板 F ﾚﾊﾞｽﾌﾟﾘﾝｸﾞ
16	MLEVP0754FCZZ	AF	DS		C	Rear plate lever copier	後端ﾚﾊﾞｰｺﾋﾟｱ
17	MSPRC2640FCZZ	AC	DJ		C	Rear plate spring	後端板ｽﾌﾟﾘﾝｸﾞ
18	LPLTP5413FCZZ	AF	DS		C	Rear plate	後端板
21	XEBSD40P08000	AA	DD		C	Screw(4×8)	ﾋﾞｽ
22	LX-BZ0833FCZZ	AC	DD		C	Screw	ﾋﾞｽ
23	LSTPP0314FCZZ	AA	DJ		C	Stopper	ｽﾄｯﾊﾟｰ
24	NSFTZ2467FCZZ	AF	DS		C	Size detection rack shaft	ｻｲｽﾞ検知ﾗｯｸｼｬﾌﾄ
25	LDAiU0576FCZZ	AG	DX		C	Size detection block	ｻｲｽﾞ検知ﾌﾞﾛｯｸ
26	MSPRC2642FCZ1	AB	DJ		C	Tray earth spring	ｶｾｯﾄｱｰｽｽﾌﾟﾘﾝｸﾞ
27	NGERK1272FCZ1	AF	DS		C	Gear	ｷﾞﾔ
29	CSFTZ2553FC01	AN	EG		C	Lift shaft unit	ﾘﾌﾄｼｬﾌﾄﾕﾆｯﾄ
30	NBRGP0626FCZZ	AC	DJ		C	Bearing(M8)	軸受ｲｹ
31	XRESP70-08000	AA	DD		C	E type ring	E-ﾘﾝｸﾞ
32	TLABZ4238FCZZ	AD	DJ		C	Size display label (Japan only)	ｻｲｽﾞ表示ﾗﾍﾞﾙ
	TLABZ4239FCZZ	AD	DJ		C	Size display label (Except Japan)[AB Series]	ｻｲｽﾞ表示ﾗﾍﾞﾙ
	TLABZ4240FCZZ	AD	DJ		C	Size display label (Except Japan)[Inch Series]	ｻｲｽﾞ表示ﾗﾍﾞﾙ
33	MSPRC2669FCZZ	AB	DJ		C	Tray right earth spring	ｶｾｯﾄ右ｱｰｽｽﾌﾟﾘﾝｸﾞ
34	LPLTM5416FCZZ	AH	DX		C	Tray reinforce plate right	ｶｾｯﾄ補強右ﾌﾟﾚｰﾄ
36	LHLDZ1377FCZZ	AD	DJ		C	Rear plate holder	後端ﾌﾟﾚｰﾄﾎﾙﾀﾞｰ
37	LX-BZ0531FCZZ	AA	DD		C	Screw(4×8)	ﾋﾞｽ
39	GCASP0173FCZ2	BA	FX		C	550 sheets casette	550 枚ｶｾｯﾄ
40	LHLDW1226FCZZ	AB	DJ		C	Turn fastener	ﾀｰﾝﾌｧｽﾅｰ
	(Unit)						
901	CCASP0173FC15	BG	GT		E	Casette unit (Japan only)	ｶｾｯﾄﾕﾆｯﾄ
	CCASP0173FC16	BG	GT		E	Casette unit (Except Japan)[AB Series]	ｶｾｯﾄﾕﾆｯﾄ
	CCASP0173FC17	BF	GN		E	Casette unit (Except Japan)[Inch Series]	ｶｾｯﾄﾕﾆｯﾄ

10 ｶｾｯﾄﾕﾆｯﾄ (Casette unit)

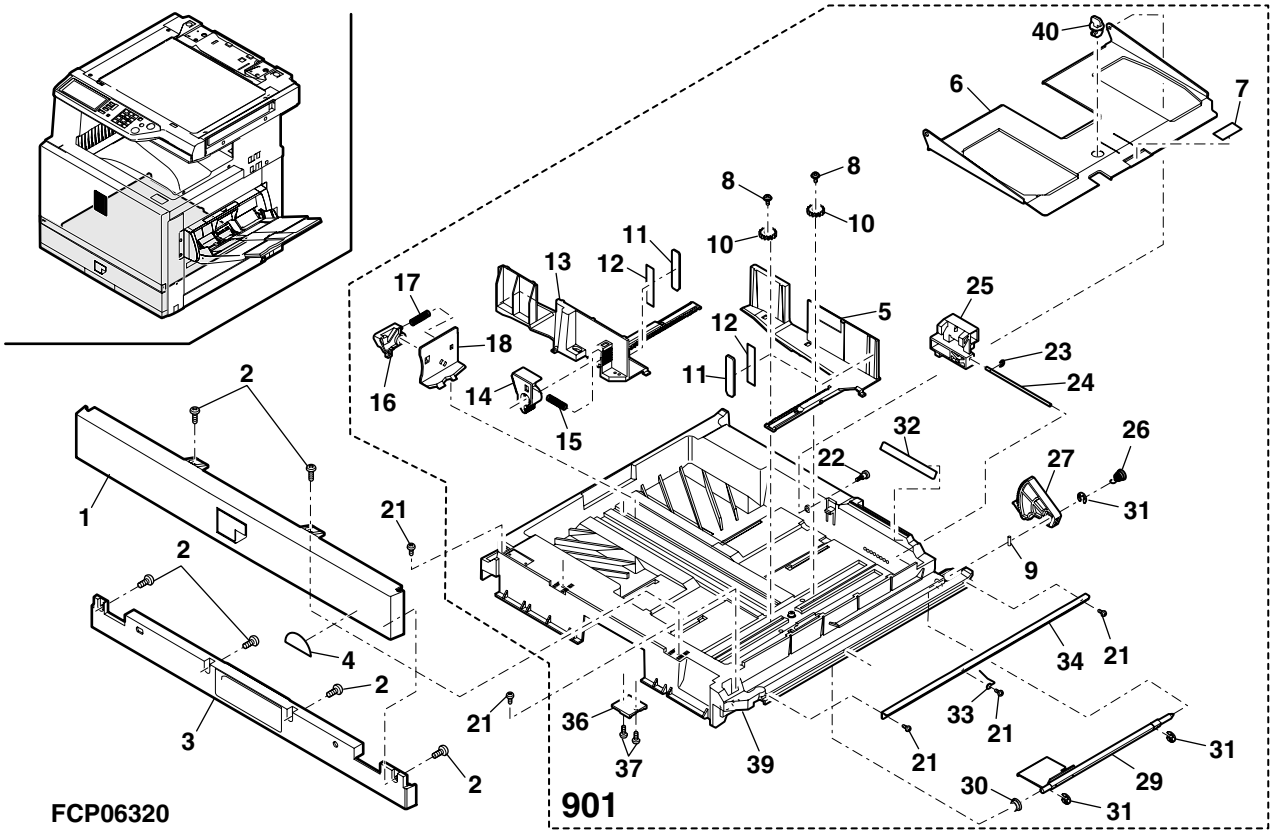

11 給紙ユニット (Paper feed unit)

NO.	PARTS CODE	PRICE RANK		NEW MARK	PART RANK	DESCRIPTION	
		Ex.	Ja.				
1	PCASZ0299FCZZ	AF	DS	N	C	Belt connector case	ﾍﾞﾙﾄｺﾈｸﾀｹｰｽ
2	DHAi-3339FC11	AV	FG	N	C	Paper feed harness	給紙ﾊｰﾈｽ
3	XHBSE30P06000	AA	DD		C	Screw(3×6)	ﾋﾞｽ
4	MARMP0293FCZ1	AL	EB	N	C	Pick-up roller arm	呼込みﾛｰﾗｱｰﾑ
5	MSPRD3084FCZZ	AD	DJ	N	C	Pick up roller arm spring	呼込みﾛｰﾗｰｱｰﾑｽﾌﾟﾘﾝｸﾞ
6	MSPRC3074FCZZ	AC	DJ	N	C	Connector slide spring	ｺﾈｸﾀｽﾗｲﾄﾞｽﾌﾟﾘﾝｸﾞ
7	LX-BZ0850FCZZ	AC	DD		C	Screw	ﾋﾞｽ
8	PCLC-0321FCZZ	AT	EZ	N	B	PF clutch W	PF ｸﾗｯﾁ W
9	XRESP40-06000	AA	DD		C	E type ring	E-ﾘﾝｸﾞ
10	XRESP50-06000	AA	DD		C	E type ring	E-ﾘﾝｸﾞ
11	NBRGC0387FCZ1	AC	DJ		C	Bearing	軸受け
12	NSFTZ2700FCZZ	AQ	EQ	N	C	Paper feed roller shaft	給紙ﾛｰﾗｼｬﾌﾄ
13	PGiDM1981FCZZ	AH	DX	N	C	Pick-up roller guide	呼込みﾛｰﾗｶﾞｲﾄﾞ
14	MSPRC3169FCZZ	AC	DJ	N	C	Pick-up spring	呼込みｽﾌﾟﾘﾝｸﾞ
15	NPLYZ0409FCZZ	AL	EB	N	C	Paper feed roller pulley	給紙ﾛｰﾗﾌﾟｰﾘｰ
16	NCPL-0049FCBZ	AT	EZ		C	MF separator cupling	ﾏﾙﾁ分離ｶｯﾌﾟﾘﾝｸﾞ
17	NROLR1411FCZZ	AK	EB	N	B	Paper feed separater roller	給紙分離ﾛｰﾗ
18	NSFTZ2591FCZZ	AF	DS		C	Pick-up roller shaft	呼込みﾛｰﾗｼｬﾌﾄ
19	NPLYZ0365FCZZ	AC	DJ		C	Pick-up roller pulley	呼込みﾛｰﾗﾌﾟｰﾘｰ
20	NBLTH0239FCZZ	AF	DX		C	Belt(55MXL3.2)	ﾍﾞﾙﾄ
21	NROLR1428FCZZ	AK	DX	N	B	Pick-up roller	呼込みﾛｰﾗ
22	VHPGP1A71L3-1	AG	DS	N	B	Photo sensor(GP1A71L3)	ﾌｫﾄｾﾝｻｰ
23	CFRM-1081FC01	AU	FG	N	C	Paper feed frame	給紙ﾌﾚｰﾑ
24	XEBSD40P08000	AA	DD		C	Screw(4×8)	ﾋﾞｽ
25	PGiDM1983FCZZ	AS	EQ	N	C	PF upper front PG	給紙上前ﾍﾟｰﾊﾟｰｶﾞｲﾄﾞ
26	MLEVP0695FCZZ	AC	DJ		C	H Paper feeding lever	H 給紙ﾚﾊﾞｰ
27	LHLDZ1517FCZZ	AE	DS	N	C	Belt connector holder	ﾍﾞﾙﾄｺﾈｸﾀｰﾎﾙﾀﾞｰ
28	MSPRC3073FCZZ	AC	DJ	N	C	Belt connector spring	ﾍﾞﾙﾄｺﾈｸﾀｽﾌﾟﾘﾝｸﾞ
29	XHBSE40P08000	AA	DD		C	Screw(4×8)	ﾋﾞｽ
30	XHBSE30P08000	AA	DD		C	Screw(3×8)	ﾋﾞｽ
31	XEBSD40P08000	AA	DD		C	Screw(4×8)	ﾋﾞｽ
32	XHBSE40P08000	AA	DD		C	Screw(4×8)	ﾋﾞｽ
						(Unit)	
901	CFRM-1081DS51	BK	HG	N	E	Paper feed unit(Without No.29,30,31)	給紙ﾕﾆｯﾄ(No.29,30,31除く)

11 給紙ユニット (Paper feed unit)

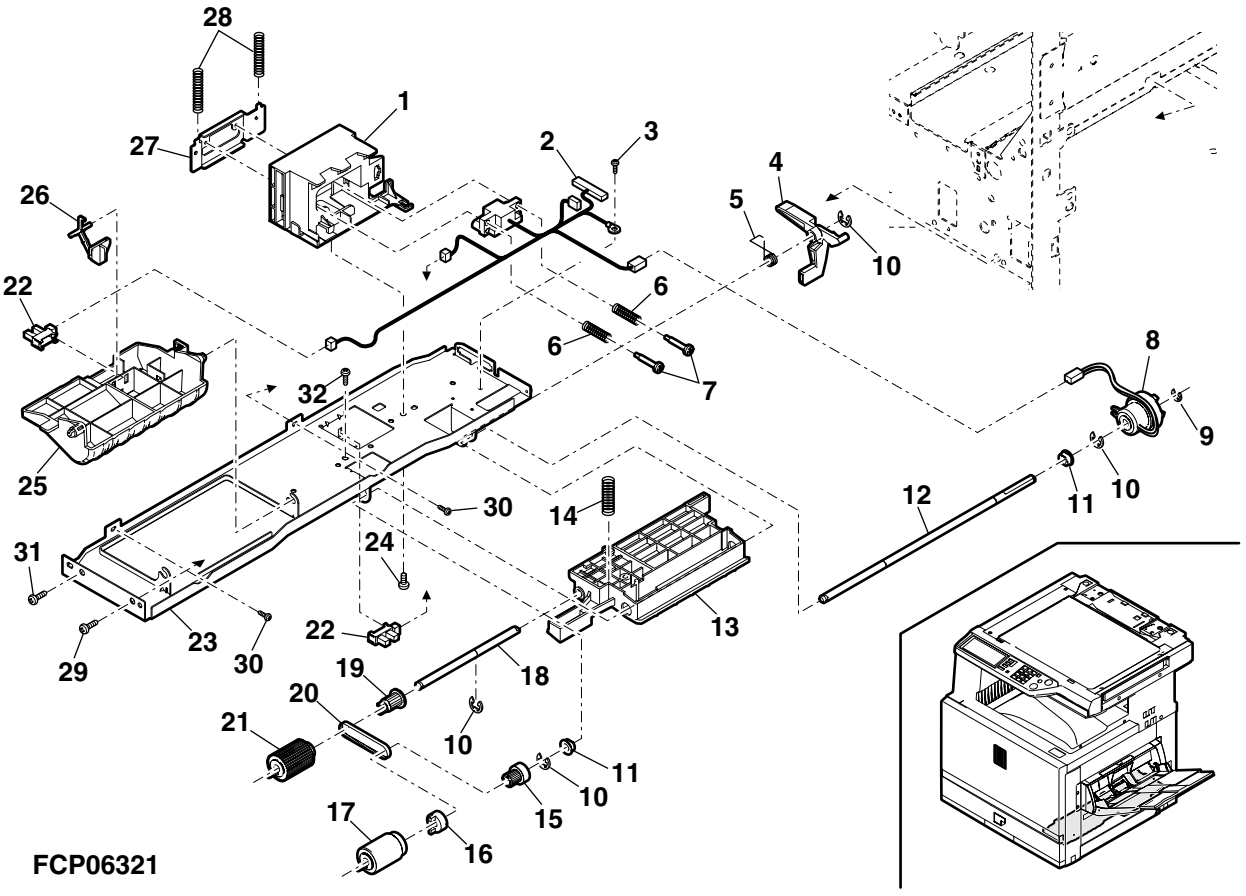

12 給紙駆動ﾕﾆｯﾄ (Paper feeding drive unit)

NO.	PARTS CODE	PRICE RANK		NEW MARK	PART RANK	DESCRIPTION	
		Ex.	Ja.				
1	CFRM-1063FC01	AU	EZ	N	C	Paper feeding drive frame	給紙駆動ﾌﾚｰﾑ
2	NBRGY2122SCZZ	AB	DD		C	Bearing	ﾍﾞｱﾘﾝｸﾞ
3	NSFTZ2688FCZZ	AL	EB	N	C	Multi output shaft	ﾏﾙﾁ出力ｼｬﾌﾄ
4	LPiNS0133FCZZ	AA	DD		C	Pin(φ2-10)	ﾍｲｺｳﾋﾟﾝ
5	PCLC-0297FCZZ	AU	FG		B	PS front clutch	PS 前ｸﾗｯﾁ
6	CPLTM5983FC01	AL	EB	N	C	Paper feed motor fixing plate	給紙ﾓｰﾀﾌﾞﾚｰﾄ
7	RMOTP0891FCZZ	BG	GT	N	B	Paper feed motor	給紙ﾓｰﾀ
8	XHBSE40P08000	AA	DD		C	Screw(4×8)	ﾋﾞｽ
10	NBRGC0651FCZZ	AD	DJ		C	Bearing	軸受け
11	XRESP70-08000	AA	DD		C	E type ring	E-ﾘﾝｸﾞ
12	XRESP40-06000	AA	DD		C	E type ring	E-ﾘﾝｸﾞ
13	PCLC-0298FCZZ	AT	EZ		B	Paper feed clutch	給紙ｸﾗｯﾁ
14	NGERH1497FCZZ	AE	DS	N	B	PF gear(37T)	給紙出力ｷﾞﾔ
15	XRESP50-06000	AA	DD		C	E type ring	E-ﾘﾝｸﾞ
16	NGERH1252FCZZ	AD	DJ		C	Delivery change gear(21T)	排紙変速ｷﾞﾔ
17	NSFTZ2687FCZZ	AK	EB	N	C	Transfer output shaft	搬送出力ｼｬﾌﾄ
18	QCNCM0999FCZZ	AC	DJ		C	Connector(BU02P-TR-PH)	ｺﾈｸﾀｰ
19	QCNCM1000FCZZ	AC	DJ		C	Connector(BU3P-TR-P-H)	ｺﾈｸﾀｰ
20	NGERH1496FCZZ	AE	DJ	N	C	PF reduction gear(65T)	給紙減速ｷﾞﾔ
21	NGERH0111FCWZ	AD	DJ		C	Idle gear(24T)	ｱｲﾄﾞﾙｷﾞﾔ
22	NGERH0867FCZZ	AC	DD		C	Delivery gear(20T)	排紙伝達ｷﾞﾔ
23	NGERH0866FCZZ	AC	DD		B	Gear(22T)	ｷﾞﾔ
24	NGERH1510FCZZ	AD	DJ	N	B	PS drive gear(20T)	PS 駆動ｷﾞﾔ
25	LBNDJ0043FCZ1	AA	DJ		C	Band(SG-130)	ﾊﾞﾝﾄﾞ
26	XHBSE40P08000	AA	DD		C	Screw(4×8)	ﾋﾞｽ
	(Unit)						
901	CFRM-1063DS51	BF	GN	N	E	Paper feeding drive unit(Without No.7,26)	給紙駆動ﾕﾆｯﾄ(No.7,26 除く)

12 給紙駆動ﾕﾆｯﾄ (Paper feeding drive unit)

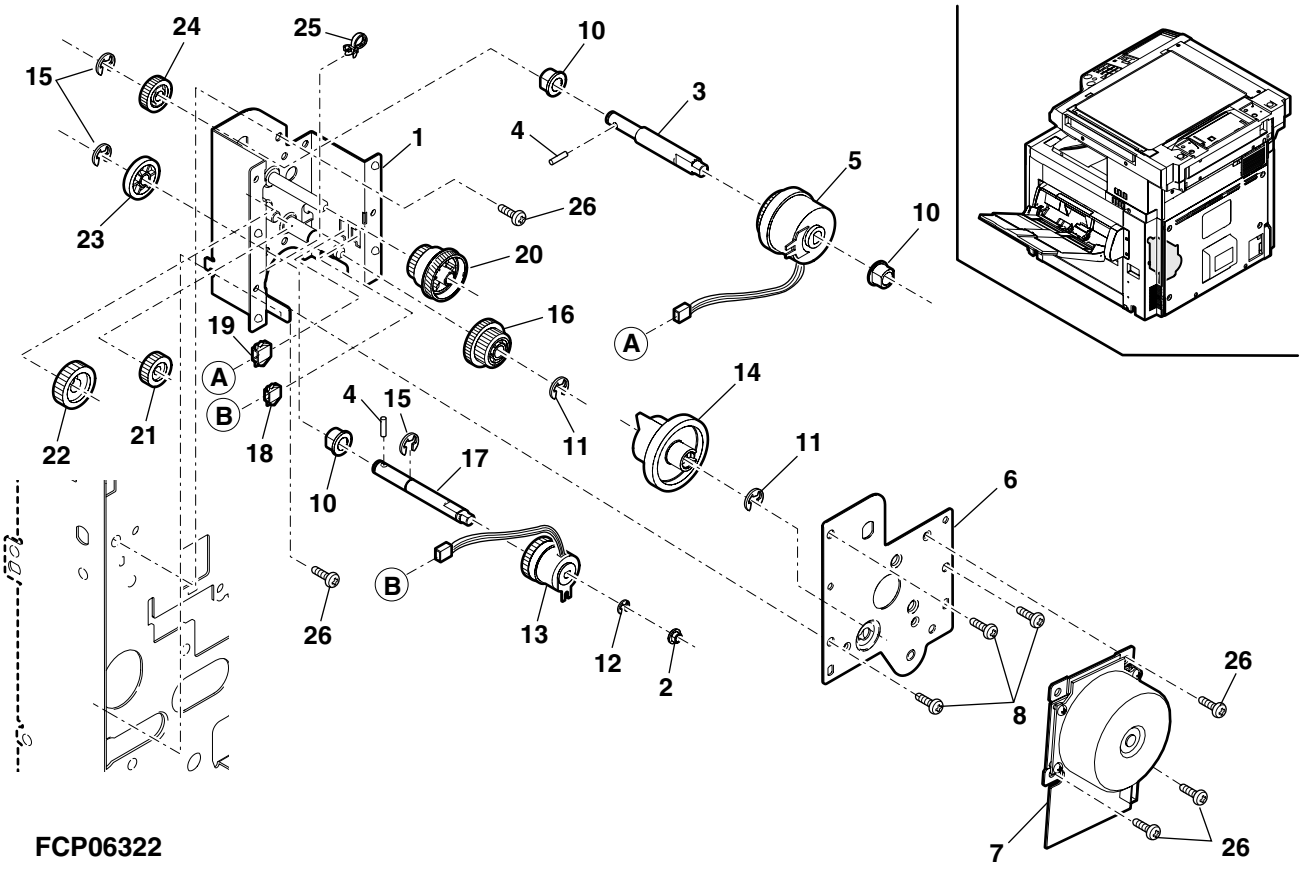

13 ﾏﾙﾁ手差しﾕﾆｯﾄ 1(Multi manual paper feeding unit 1)

NO.	PARTS CODE	PRICE RANK Ex.	PRICE RANK Ja.	NEW MARK	PART RANK	DESCRIPTION		
1	LHLDZ1524FCZZ	AK	DX	N	C	Tray fulcrum holder R		ﾄﾚｲ支点ﾎﾙﾀﾞｰR
2	XEBSE40P10000	AA	DD		C	Screw(4×10)		ﾋﾞｽ
3	PCOVP1653FCZZ	AN	EQ	N	C	MF rear cover 250		手差し後ｶﾊﾞｰ250
4	LSOU-0026QSCZ	BA	FX	N	C	Multi paper feed tray 2 upper		手差しﾄﾚｲ2 上
5	VHPGP1A71L3-1	AG	DS	N	B	Photo sensor(GP1A71L3)		ﾌｫﾄｾﾝｻｰ
6	QSW-B0017QSZZ	AF	DS	N	B	Tray detect switch		ｶｾｯﾄ検知ｽｲｯﾁ
7	MLEVP0035QSE1	AC	DJ		C	Original detect actuator		原稿検知ｱｸﾁｪｰﾀｰ
8	LSOU-0193FCZ5	AN	EQ	N	C	Slide tray L	(100V Series)	ｽﾗｲﾄﾞﾄﾚｲ L
	LSOU-0193FCZZ	AP	EQ	N	C	Slide tray L	(200V Series)	ｽﾗｲﾄﾞﾄﾚｲ L
9	DHAi-3359FC11	AQ	EQ	N	C	MF tray harness		手差しﾄﾚｲﾊｰﾈｽ
10	LSOU-0190FCZ5	AV	FG	N	C	Multi paper feed tray 250 lower	(100V Series)	ﾏﾙﾁﾄﾚｲ 250 下
	LSOU-0190FCZZ	AT	EZ	N	C	Multi paper feed tray 250 lower	(200V Series)	ﾏﾙﾁﾄﾚｲ 250 下
11	PGiDW2015FCZZ	AG	DS	N	C	Support guide		補助ｶﾞｲﾄﾞ
13	XEBSE30P08000	AA	DD		C	Screw(3×8)		ﾋﾞｽ
14	LPLTP6020FCZZ	AF	DS	N	C	Widtch detector fixing plate		幅検知取付けﾌﾟﾚｰﾄ
15	CPWBF0106RS51	AP	EQ		E	Multi paper feed VR PWB		ﾃｻﾝ VR 基板ﾕﾆｯﾄ
16	NGERP1385FCZZ	AF	DS		C	Width detect pinion gear		幅検知ﾋﾟﾆｵﾝｷﾞﾔ
17	XEPSD30P06X00	AA	DD		C	Screw(3×6X)		ﾋﾞｽ
18	NGERR1386FCZZ	AE	DJ		C	Width detect rack gear		幅検知ﾗｯｸｷﾞﾔ
19	RDTCH0155FCZZ	AU	EZ	N	B	Hygrometer sensor		湿度ｾﾝｻ - ﾕﾆｯﾄ
20	LHLDZ1521FCZZ	AE	DJ	N	C	Haness holder		ﾊｰﾈｽﾎﾙﾀﾞｰ
21	LSOU-0189FCZ5	AT	EZ	N	C	Multi paper feed tray 250 upper	(100V Series)	ﾏﾙﾁﾄﾚｲ 250 上
	LSOU-0189FCZZ	AU	EZ	N	C	Multi paper feed tray 250 upper	(200V Series)	ﾏﾙﾁﾄﾚｲ 250 上
22	MSPRC2114FCZZ	AB	DJ		C	Lock spring		ﾛｯｸｽﾌﾟﾘﾝｸﾞ
23	PTME-0271FCZZ	AD	DJ		C	Tray lock pawl		ﾄﾚｲﾛｯｸ爪
24	PGiDM1987FCZZ	AG	DS	N	C	Size guide 250R		ｻｲｽﾞｶﾞｲﾄﾞ 250R
25	PGiDM1986FCZZ	AF	DS	N	C	Size guide 250F		ｻｲｽﾞｶﾞｲﾄﾞ 250F
26	PCOVP1652FCZZ	AN	EG	N	C	MF front cover 250		手差し前ｶﾊﾞｰ250
27	LHLDZ1523FCZZ	AH	DX	N	C	Tray fulcrum holder F		ﾄﾚｲ支点ﾎﾙﾀﾞｰF
28	XEBSD30P06000	AA	DD		C	Screw(3×6)		ﾋﾞｽ
29	XHBSE40P08000	AA	DD		C	Screw(4×8)		ﾋﾞｽ
30	TLABZ4759FCZZ	AH	DX	N	C	MF size label	(Japan only)	ﾃｻﾝｻｲｽﾞﾗﾍﾞﾙ
	(Unit)							
901	DUNT-7187DSZZ	BV	RB	N	E	Multi paper feed unit(Include Block 14,15 Without No.29,30) ﾏﾙﾁ給紙ﾕﾆｯﾄ(ﾌﾞﾛｯｸ 14,15 含む。No.29,30 含まない)	(100V Series)	
	DUNT-7187DS11	BV	RB	N	E	Multi paper feed unit(Include Block 14,15 Without No.29,30) ﾏﾙﾁ給紙ﾕﾆｯﾄ(ﾌﾞﾛｯｸ 14,15 含む。No.29,30 含まない)	(200V Series)	

13 ﾏﾙﾁ手差しﾕﾆｯﾄ 1(Multi manual paper feeding unit 1)

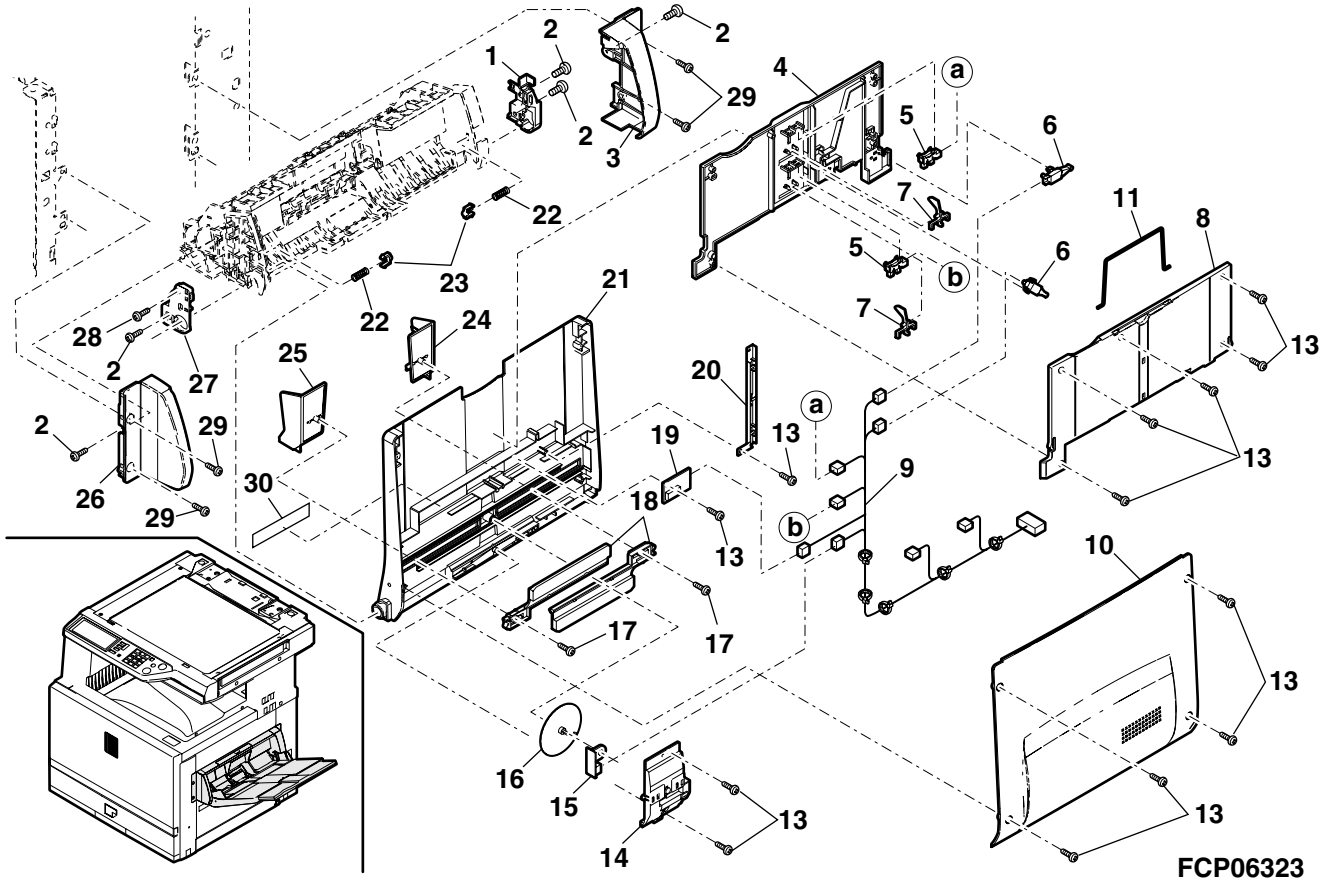

14 ﾏﾙﾁ手差しﾕﾆｯﾄ 2(Multi manual paper feeding unit 2)

NO.	PARTS CODE	PRICE RANK Ex.	PRICE RANK Ja.	NEW MARK	PART RANK	DESCRIPTION	
1	PCOVP1639FCZ5	AR	EQ	N	C	MF upper cover	(100V Series) 手差し上ｶﾊﾞｰ
	PCOVP1639FCZZ	AQ	EQ	N	C	MF upper cover	(200V Series) 手差し上ｶﾊﾞｰ
2	MSPRT3121FCZ1	AC	DJ	N	C	Roller pressure spring	ﾛｰﾗｰ加圧ｽﾌﾟﾘﾝｸﾞ
3	NSFTZ2707FCZZ	AH	DX	N	C	PS front follow roller shaft	PS 前従動ﾛｰﾗｼｬﾌﾄ
4	NROLP1060FCZZ	AF	DS		C	U-turn roller	Uﾀｰﾝﾛｰﾗ
6	PGiDM1974FCZ5	AV	FG	N	C	MF upper PG	(100V Series) 手差し上ﾍﾟｰﾊﾟｰｶﾞｲﾄﾞ
	PGiDM1974FCZ1	AV	FG	N	C	MF upper PG	(200V Series) 手差し上ﾍﾟｰﾊﾟｰｶﾞｲﾄﾞ
7	PSHEP5037FCZZ	AC	DJ	N	C	Upper PG sheet	上 PG ｼｰﾄ
8	XRESP50-06000	AA	DD		C	E type ring	E-ﾘﾝｸﾞ
9	NBRGM0096FCZ1	AC	DJ		C	Bearing	軸受け
10	PCLC-0317FCZZ	AR	EQ	N	B	Pick-up start limiter	呼込み起動ﾘﾐｯﾀｰ
11	MSPRD3100FCZZ	AC	DJ	N	C	Stopper arm spring	ｽﾄｯﾊﾟｰｱｰﾑｽﾌﾟﾘﾝｸﾞ
12	MLNKP0027FCZZ	AE	DJ	N	C	Pick-up link	呼込みﾘﾝｸ
13	CPLTM6071FC01	AK	DX	N	C	Stopper support plate	ｽﾄｯﾊﾟｰ支持ﾌﾟﾚｰﾄ
14	PGiDM1985FCZZ	AF	DS	N	C	Support PG	補助ﾍﾟｰﾊﾟｰｶﾞｲﾄﾞ
15	PSHEP5071FCZZ	AB	DJ	N	C	Paper guide sheet	用紙ｶﾞｲﾄﾞｼｰﾄ
17	PCOVP1658FCZ1	AG	DX	N	C	Connected cover	連動ｶﾊﾞｰ
18	PCOVP1642FCZ1	AL	EB	N	C	Arm cover 250	ｱｰﾑｶﾊﾞｰ 250
19	LSTPP0366FCZZ	AD	DJ	N	C	Stopper	ｽﾄｯﾊﾟｰ
20	MLEVP0871FCZZ	AD	DJ	N	C	Stopper release lever	ｽﾄｯﾊﾟ解除ﾚﾊﾞｰ
21	XRESP40-06000	AA	DD		C	E type ring	E-ﾘﾝｸﾞ
22	XEBSE40P10000	AA	DD		C	Screw(4×10)	ﾋﾞｽ
23	PSHEP5022FCZZ	AC	DJ	N	C	Pick-up guide sheet	呼込みｶﾞｲﾄﾞｼｰﾄ
24	NSFTZ2701FCZZ	AK	DX	N	C	Pick-up roller shaft	呼込みﾛｰﾗｼｬﾌﾄ
25	NPLYZ0398FCZZ	AC	DJ		C	Pick-up roller pulley(22T)	呼込みﾛｰﾗﾌﾟｰﾘｰ
26	NBLTT7029XCZZ	AG	DS		C	Drive belt	駆動ﾍﾞﾙﾄ
27	NROLR1428FCZZ	AK	DX	N	B	Pick-up roller	呼込みﾛｰﾗ
28	NROLR1311FCZZ	AN	EG		B	Paper feed separator roller	給紙分離ﾛｰﾗ
29	NCPL-0049FCZZ	AH	DX		C	One-way cupling	ﾜﾝｳｪｲｶｯﾌﾟﾘﾝｸﾞ
30	NPLYZ0404FCZZ	AE	DJ	N	C	MF drive pulley	手差し駆動ﾌﾟｰﾘｰ
31	MARMP0294FCZ1	AM	EG	N	C	Pick-up arm 250	呼込みｱｰﾑ 250
32	CSFTZ2698DS51	AQ	EQ	N	E	Multi paper feed roller shaft	手差し給紙ﾛｰﾗｰｼｬﾌﾄ
33	PSHEP5086FCZZ	AB	DJ	N	C	Wave prevention sheet	波打防止ｼｰﾄ
34	NBRGC0280FCZZ	AB	DD		C	Bearing	軸受け
35	PSHEP5119FCZZ	AB	DJ		C	Harness guide sheet	ﾊｰﾈｽｶﾞｲﾄﾞｼｰﾄ
	(Unit)						
901	DUNT-7187DSZZ	BV	RB	N	E	Multi paper feed unit(Include Block 13,15) ﾏﾙﾁ給紙ﾕﾆｯﾄ(ﾌﾞﾛｯｸ 13,15 含む)	(100V Series)
	DUNT-7187DS11	BV	RB	N	E	Multi paper feed unit(Include Block 13,15) ﾏﾙﾁ給紙ﾕﾆｯﾄ(ﾌﾞﾛｯｸ 13,15 含む)	(200V Series)

14 ﾏﾙﾁ手差しﾕﾆｯﾄ 2(Multi manual paper feeding unit 2)

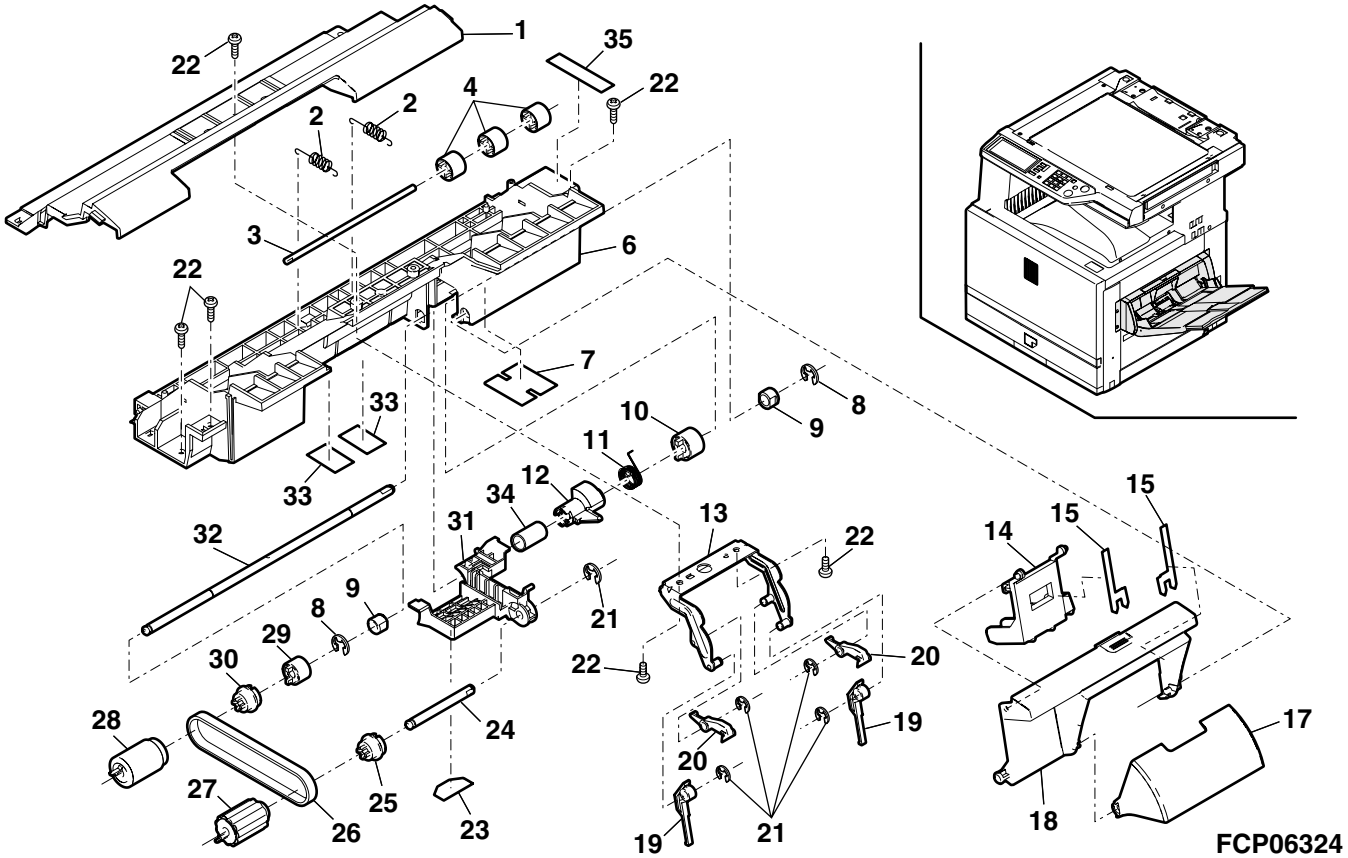

15 ﾏﾙﾁ手差しﾕﾆｯﾄ 3(Multi manual paper feeding unit 3)

NO.	PARTS CODE	PRICE RANK Ex.	PRICE RANK Ja.	NEW MARK	PART RANK	DESCRIPTION	
1	NROLR1400FCZZ	AS	EZ	N	C	PS front roller	PS 前ﾛｰﾗ
2	PSHEP4971FCZZ	AC	DJ	N	C	PF guide sheet mylar	給紙ｶﾞｲﾄﾞﾏｲﾗｰ
3	PSHEZ4788FCZ1	AD	DJ		C	Manual feed sheet BE	手差しｼｰﾄ BE
4	XRESP70-08000	AA	DD		C	E type ring	E-ﾘﾝｸﾞ
5	NGERH0317FCZZ	AC	DJ		C	DV gear(18T)	DV ｷﾞﾔ
6	LPiNS0155FCZZ	AA	DD		C	Pin(φ3-10)	ﾍｲｺｳﾋﾟﾝ
7	NBRGC0504FCZZ	AC	DJ		C	Bearing	軸受け
8	NGERH1526FCZZ	AE	DJ	N	C	Reverse drive gear	逆転駆動ｷﾞﾔ
9	MSPRC3122FCZZ	AD	DJ	N	C	Shaft earth spring	ｼｬﾌﾄｱｰｽｽﾌﾟﾘﾝｸﾞ
10	NGERH1536FCZZ	AC	DJ	N	C	Idle gear(18T)	ｱｲﾄﾞﾙｷﾞﾔ
11	NGERH1511FCZZ	AE	DJ	N	C	Idle gear(21/24)	ｱｲﾄﾞﾙｷﾞﾔ
12	CFRM-1075FC01	AN	EG	N	C	Malti paper feed drive frame	手差し駆動ﾌﾚｰﾑ
13	XEBSE40P10000	AA	DD		C	Screw(4×10)	ﾋﾞｽ
15	LPiNS0133FCZZ	AA	DD		C	Pin(φ2-10)	ﾍｲｺｳﾋﾟﾝ
17	NGERH1383FCZZ	AD	DJ		C	Fusing drive gear(30T)	定着駆動ｷﾞﾔ
18	NBRGM0096FCZ1	AC	DJ		C	Bearing	軸受け
19	PCLC-0298FCZZ	AT	EZ		B	Paper feed clutch	給紙ｸﾗｯﾁ
20	XRESP40-06000	AA	DD		C	E type ring	E-ﾘﾝｸﾞ
21	XRESP50-06000	AA	DD		C	E type ring	E-ﾘﾝｸﾞ
22	PCOVP1640FCZ5	AL	EB	N	C	MF lower cover (100V Series)	手差し下ｶﾊﾞｰ
	PCOVP1640FCZ1	AN	EQ	N	C	MF lower cover (200V Series)	手差し下ｶﾊﾞｰ
23	MARMP0295FCZZ	AF	DS	N	C	Separator roller release arm	分離ﾛｰﾗ解除ｱｰﾑ
24	MLEVP0852FCZZ	AG	DS	N	C	PE actuator 250	PE ｱｸﾁｭｴｰﾀ 250
25	MSPRD3099FCZ1	AC	DJ	N	C	RE actuator spring	RE ｱｸﾁｴｰﾀｽﾌﾟﾘﾝｸﾞ
26	PCOVP1641FCZZ	AG	DS	N	C	Maintenace cover	ﾒﾝﾃﾅﾝｽｶﾊﾞｰ
27	MLNKP0029FCZZ	AD	DJ	N	C	RE actuator link	RE ｱｸﾁｭｴｰﾀﾘﾝｸ
28	VHPGP1A71L3-1	AG	DS	N	B	Photo sensor(GP1A71L3)	ﾌｫﾄｾﾝｻｰ
29	MSPRC3066FCZZ	AC	DJ	N	C	Separater roller spring	分離ﾛｰﾗｽﾌﾟﾘﾝｸﾞ
30	LHLDZ1520FCZZ	AC	DJ	N	C	Separate roller shaft holder	分離ﾛｰﾗｰ軸ﾎﾙﾀﾞｰ
33	CSFTZ2702DS51	AP	EQ	N	E	Multi paper feed roller separate shaft	手差し分離ﾛｰﾗｰｼｬﾌﾄ
34	PCLC-0316FCZ1	AR	EQ	N	B	Sparater roller torque limiter	分離ﾛｰﾗﾄﾙｸﾘﾐｯﾀｰ
35	NROLR1311FCZZ	AN	EG		B	Paper feed separator roller	給紙分離ﾛｰﾗ
36	PGiDM1973FCZ5	AS	EQ	N	C	MF lower PG 250 (100V Series)	手差し下ﾍﾟｰﾊﾟｰｶﾞｲﾄﾞ 250
	PGiDM1973FCZZ	AU	EZ	N	C	MF lower PG 250 (200V Series)	手差し下ﾍﾟｰﾊﾟｰｶﾞｲﾄﾞ 250
37	PSHEZ5088FCZZ	AF	DS		C	Guide sheet	ｶﾞｲﾄﾞｼｰﾄ
38	LSTYM0295FCZZ	AL	EB	N	C	Multi paper feed PG stay	手差し上 PG ｽﾃｰ
39	PSHEP4970FCZ2	AE	DS	N	C	PS front guide mylar	PS 前ｶﾞｲﾄﾞﾏｲﾗｰ
40	PSHEP4993FCZ2	AE	DS	N	C	PS front guide sheet B	PS 前ｶﾞｲﾄﾞｼｰﾄB
41	LX-WZ2011SCZZ	AA	DD		C	Washer	ﾎﾟﾘｽﾗｲﾀﾞｰ
	(Unit)						
901	DUNT-7187DSZZ	BV	RB	N	E	Multi paper feed unit(Include Block 13,14) ﾏﾙﾁ給紙ﾕﾆｯﾄ(ﾌﾞﾛｯｸ 13,14 含む)	(100V Series)
	DUNT-7187DS11	BV	RB	N	E	Multi paper feed unit(Include Block 13,14) ﾏﾙﾁ給紙ﾕﾆｯﾄ(ﾌﾞﾛｯｸ 13,14 含む)	(200V Series)

15 ﾏﾙﾁ手差しﾕﾆｯﾄ 3(Multi manual paper feeding unit 3)

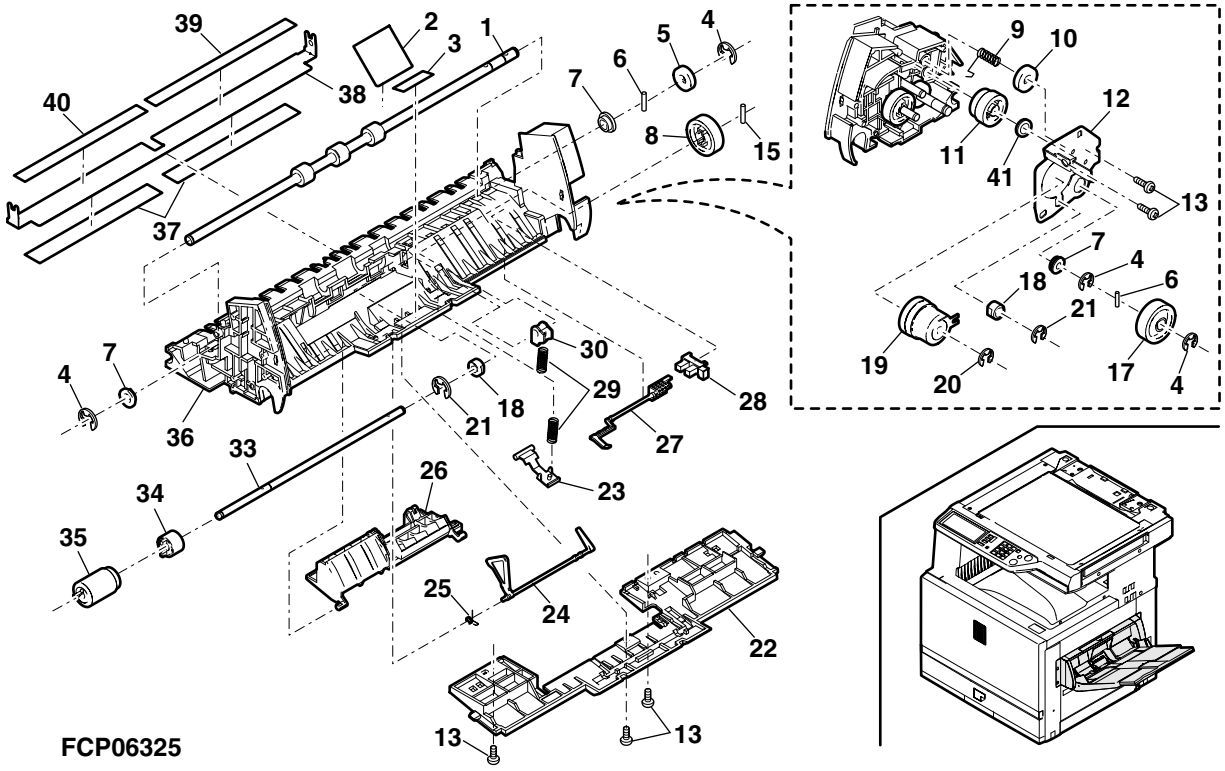

16 縦搬送ｶﾞｲﾄﾞﾕﾆｯﾄ (Vertical transport guide unit)

NO.	PARTS CODE	PRICE RANK Ex.	PRICE RANK Ja.	NEW MARK	PART RANK	DESCRIPTION		
1	PGiDM1977FCZZ	AN	EG	N	C	Vertical transfer guide R		縦搬送ｶﾞｲﾄﾞ右
2	NROLP0896FCZZ	AC	DD		C	Transport sub roller		搬送従動ﾛｰﾗ
3	NSFTZ2704FCZZ	AL	EB	N	C	Vertical transfer follow shaft		縦搬送従動ｼｬﾌﾄ
4	MSPRT3094FCZ1	AC	DJ	N	C	Transfer spring 1		搬送ｽﾌﾟﾘﾝｸﾞ 1
5	XEBSE30P08000	AA	DD		C	Screw(3×8)		ﾋﾞｽ
6	LPLTP6019FCZZ	AD	DJ	N	C	Release fulcrum plate		解除支点ﾌﾟﾚｰﾄ
7	MLEVP0853FCZ1	AF	DS	N	C	Guide lock release lever		GID ﾛｯｸ解除ﾚﾊﾞｰ
8	PMLT-1305FCZZ	AC	DJ	N	C	Right door cushion upper		右ﾄﾞｱﾓﾙﾄｳｴ
9	MSPRD3093FCZ1	AC	DJ	N	C	Look release spring		ﾛｯｸ解除ｽﾌﾟﾘﾝｸﾞ
10	PMLT-1304FCZZ	AC	DJ	N	C	Right door cushion FR		右ﾄﾞｱﾓﾙﾄ FR
11	GCAB-0983FCZ5	AQ	EQ	N	C	Right door cabinet	(100V Series)	右ﾄﾞｱｷｬﾋﾞ
	GCAB-0983FCZZ	AS	EQ	N	C	Right door cabinet	(200V Series)	右ﾄﾞｱｷｬﾋﾞ
12	PMLT-1313FCZZ	AC	DJ	N	C	Right door cushion R		右ﾄﾞｱﾓﾙﾄ R
13	PCOVP1707FCZZ	AG	DX	N	D	LCC cover N		LCC ｶﾊﾞｰ N
14	XEBSE40P08000	AA	DD		C	Screw(4×8)		ﾋﾞｽ
15	LSTPP0275FCZZ	AE	DS		C	Stopper		ｽﾄｯﾊﾟｰ
16	LHLDZ1514FCZZ	AK	DX	N	C	Right door fulcrum holder F		右ﾄﾞｱ支点ﾎﾙﾀﾞｰ F
17	XHBSE40P12000	AA	DD		C	Screw(4×12)		ﾋﾞｽ
19	PMLT-1303FCZ1	AD	DJ	N	C	Right door cushion lower		右ﾄﾞｱﾓﾙﾄ下
20	PMLT-1317FCZZ	AH	DX	N	C	Right door cushion middle		右ﾄﾞｱﾓﾙﾄ中
21	XRESP70-08000	AA	DD		C	E type ring	(Except Japan)	E-ﾘﾝｸﾞ
22	NGERH0111FCWZ	AD	DJ		C	Idle gear(24T)	(Except Japan)	ｱｲﾄﾞﾙｷﾞﾔ
23	MARMP0297FCZZ	AB	DJ	N	C	LCC transport roller gear arm	(Except Japan)	LCC 搬送ﾛｰﾗｷﾞｱｱｰﾑ
24	NBRGP0626FCZZ	AC	DJ		C	Bearing(M8)	(Except Japan)	軸受ｲﾅ
25	MSPRC2616FCZZ	AC	DJ		C	DV drive spring	(Except Japan)	DV ﾄﾞﾗｲﾌﾞｽﾌﾟﾘﾝｸﾞ
26	LSTPP0274FCZZ	AA	DD		C	Stopper	(Except Japan)	ｽﾄｯﾊﾟｰ
27	NROLR1406FCZZ	AM	EG	N	C	LCC transport roller	(Except Japan)	LCC 搬送ﾛｰﾗ
28	NBRGC0188FCZZ	AB	DD		C	Bearing	(Except Japan)	軸受ｲﾅ
29	XEBSE30P08000	AA	DD		C	Screw(3×8)	(Except Japan)	ﾋﾞｽ
30	PGiDM1990FCZZ	AH	DX	N	C	LCC transport guide L	(Except Japan)	LCC 搬送ｶﾞｲﾄﾞ L
31	PGiDM1989FCZZ	AH	DX	N	C	LCC transport guide R	(Except Japan)	LCC 搬送ｶﾞｲﾄﾞ R
32	PCLR-0442FCZZ	AD	DJ		C	Sub collar	(Except Japan)	補助ｺﾛ
33	NSFTZ2703FCZZ	AF	DS	N	C	LCC transport sub shaft	(Except Japan)	LCC 搬送従動ｼｬﾌﾄ
34	MSPRT3092FCZZ	AC	DJ	N	C	LCC transport spring	(Except Japan)	LCC 搬送ｽﾌﾟﾘﾝｸﾞ
35	LPiNS0155FCZZ	AA	DD		C	Pin(φ3-10)	(Except Japan)	ﾍｲｺｳﾋﾟﾝ
36	PSHEP5115FCZZ	AC	DJ	N	C	Vertical transfer mayler		縦搬送ﾏｲﾗｰ
	(Unit)							
901	CGiDM1977DS51	BA	FX	N	E	Vertical transfer guide unit(Without No.15,16,17) 縦搬送ｶﾞｲﾄﾞﾕﾆｯﾄ (No.15,16,17 除く)	(Japan only)	
	CGiDM1977DS52	BC	GJ	N	E	Vertical transfer guide unit(Without No.15,16,17) 縦搬送ｶﾞｲﾄﾞﾕﾆｯﾄ (No.15,16,17 除く)	(Except Japan)[100V Series]	
	CGiDM1977DS53	BC	GJ	N	E	Vertical transfer guide unit(Without No.15,16,17) 縦搬送ｶﾞｲﾄﾞﾕﾆｯﾄ (No.15,16,17 除く)	(Except Japan)[200V Series]	

16 縦搬送ｶﾞｲﾄﾞﾕﾆｯﾄ (Vertical transport guide unit)

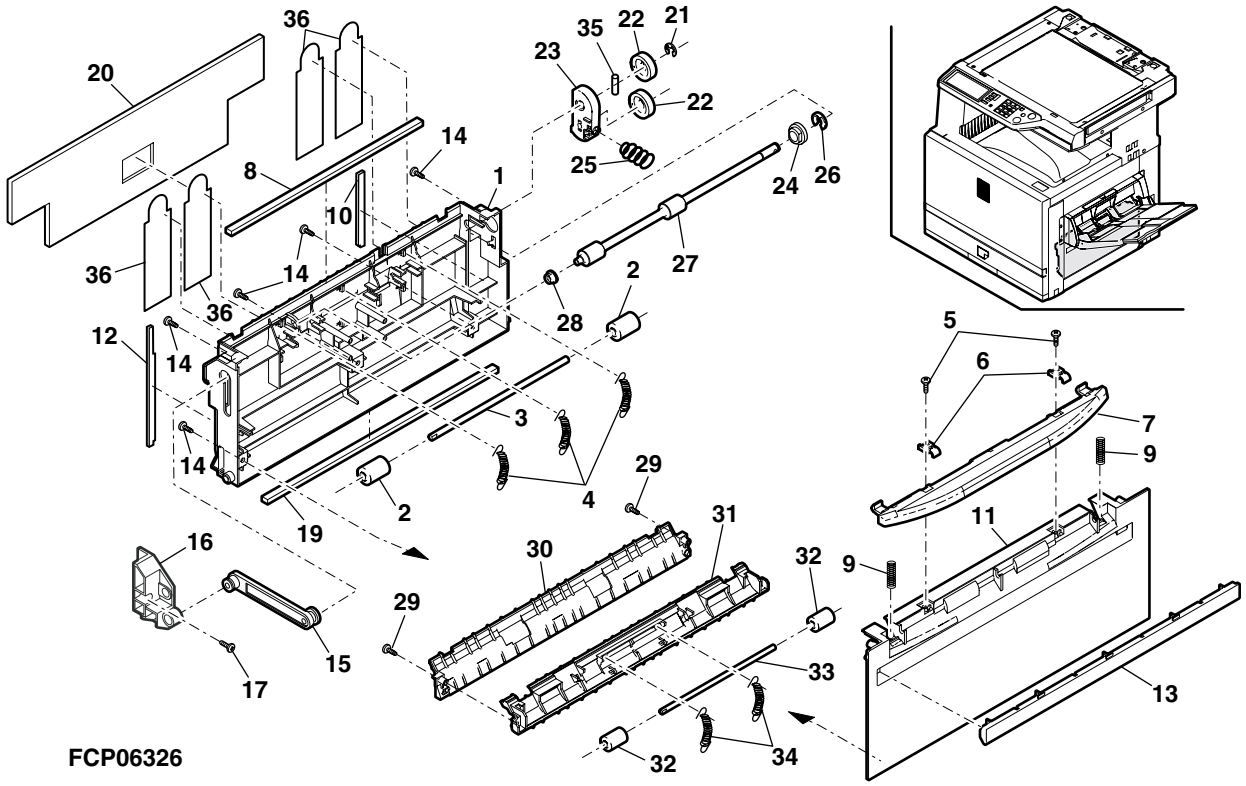

17 ｶｾｯﾄｶﾞｲﾄﾞ R・縦搬送下ﾕﾆｯﾄ (Cassette guide R/Vertical transport lower unit)

NO.	PARTS CODE	PRICE RANK		NEW MARK	PART RANK	DESCRIPTION	
		Ex.	Ja.				
1	MLEVP0854FCZZ	AC	DJ	N	C	Transfer actuator	搬送ｱｸﾁｭｴｰﾀ
2	MSPRD3067FCZZ	AC	DJ	N	C	Actuator spring	ｱｸﾁｭｴｰﾀ復帰ｽﾌﾟﾘﾝｸﾞ
3	VHPGP1A71L3－1	AG	DS	N	B	Photo sensor(GP1A71L3)	ﾌｫﾄｾﾝｻｰ
4	DHAi－3341FCZZ	AH	DX	N	C	PFD harness	PFD ﾊｰﾈｽ
5	XEBSD30P16000	AA	DD		C	Screw(3×16)	ﾋﾞｽ
6	QSW－M0502FCZZ	AH	DX		B	Door switch(AM51632C531)	ﾄﾞｱｽｲｯﾁ
7	NGERH1245FCZZ	AF	DS		C	Transport drive gear(28T)	搬送駆動ｷﾞﾔ
8	NGERH0111FCWZ	AD	DJ		C	Idle gear(24T)	ｱｲﾄﾞﾙｷﾞﾔ
9	XRESP70－08000	AA	DD		C	E type ring	E-ﾘﾝｸﾞ
10	LSTPP0274FCZZ	AA	DD		C	Stopper	ｽﾄｯﾊﾟｰ
11	NBRGP0626FCZZ	AC	DJ		C	Bearing(M8)	軸受け
12	LPiNS0096FCZZ	AB	DD		C	Pin(φ3-12)	ﾋﾟﾝ
13	LPiNS0155FCZZ	AA	DD		C	Pin(φ3-10)	ﾍｲｺｳﾋﾟﾝ
14	NROLR1401FCZZ	AS	EQ	N	C	Vertical tansfer roller	縦搬送ﾛｰﾗ
15	NBRGC0188FCZZ	AB	DD		C	Bearing	軸受け
16	NROLR1429FCZZ	AS	EQ	N	C	Vertical tansfer roller lower	縦搬送ﾛｰﾗ下
18	PGiDM1802FCZZ	AK	DX		C	Paper feed enter PG	給紙口ﾍﾟｰﾊﾟｰｶﾞｲﾄﾞ
19	XEBSE40P08000	AA	DD		C	Screw(4×8)	ﾋﾞｽ
20	PGiDM1988FCZZ	AS	EZ	N	C	Vertical transfer lower PG	縦搬送下 PG
21	NROLP0896FCZZ	AC	DD		C	Transport sub roller	搬送従動ﾛｰﾗ
22	LX－BZ0960FCZZ	AC	DD		C	Screw	ﾋﾞｽ
23	MSPRT3094FCZ1	AC	DJ	N	C	Transfer spring 1	搬送ｽﾌﾟﾘﾝｸﾞ 1
24	NSFTZ2704FCZZ	AL	EB	N	C	Vertical transfer follow shaft	縦搬送従動ｼｬﾌﾄ
25	PCOVP1509FCZZ	AH	DX		D	Transport stay R cover	搬送ｽﾃｰ R ｶﾊﾞｰ
26	XEBSD30P08000	AA	DD		C	Screw(3×8)	ﾋﾞｽ
27	LFiX－0524FCZZ	AC	DJ		C	PG collar holder	PG ｺﾛ押え
28	PCLR－0450FCZZ	AD	DJ		C	PG collar	PG ｺﾛ
29	NBLTH0376FCZZ	AF	DS	N	C	Sub roller belt	補助ﾛｰﾗﾍﾞﾙﾄ
30	NPLYZ0403FCZZ	AD	DJ	N	C	Sub roller pulley	補助ﾛ－ﾗﾌﾟｰﾘｰ
31	PRNGP0081FCZZ	AA	DJ		C	Ring(E4)	ﾘﾝｸﾞ
32	PSHEZ5007FCZZ	AF	DS	N	C	Sub belt sheet	補助ﾍﾞﾙﾄｼｰﾄ
33	MSPRP3105FCZZ	AC	DJ	N	C	Transfer roller earth spring	搬送ﾛｰﾗｱｰｽ板ﾊﾞﾈ
35	PGiDM1978FCZZ	AW	FG	N	C	Cassette guide R	ｶｾｯﾄｶﾞｲﾄﾞ R
36	PGiDM1984FCZZ	AF	DS	N	C	PF lower front PG	給紙下前ﾍﾟｰﾊﾟｰｶﾞｲﾄﾞ
37	MSPRC3085FCZ1	AC	DJ	N	C	Separator roller pressure spring	分離ﾛｰﾗ加圧ｽﾌﾟﾘﾝｸﾞ
40	XRESP50－06000	AA	DD		C	E type ring	E-ﾘﾝｸﾞ
41	CSFTZ2706DS51	AP	EQ	N	C	Separate roller shaft	分離ﾛ－ﾗｰｼｬﾌﾄ
42	NROLR1411FCZZ	AK	EB	N	B	Paper feed separater roller	給紙分離ﾛ－ﾗ
43	PCLC－0316FCZ1	AR	EQ	N	B	Sparater roller torque limiter	分離ﾛｰﾗﾄﾙｸﾘﾐｯﾀｰ
44	PGiDM1982FCZZ	AF	DS	N	C	Separater roller guide	分離ﾛｰﾗｶﾞｲﾄﾞ
45	XHBSE40P08000	AA	DD		C	Screw(4×8)	ﾋﾞｽ

17 ｶｾｯﾄｶﾞｲﾄﾞ R・縦搬送下ﾕﾆｯﾄ (Cassette guide R/Vertical transport lower unit)

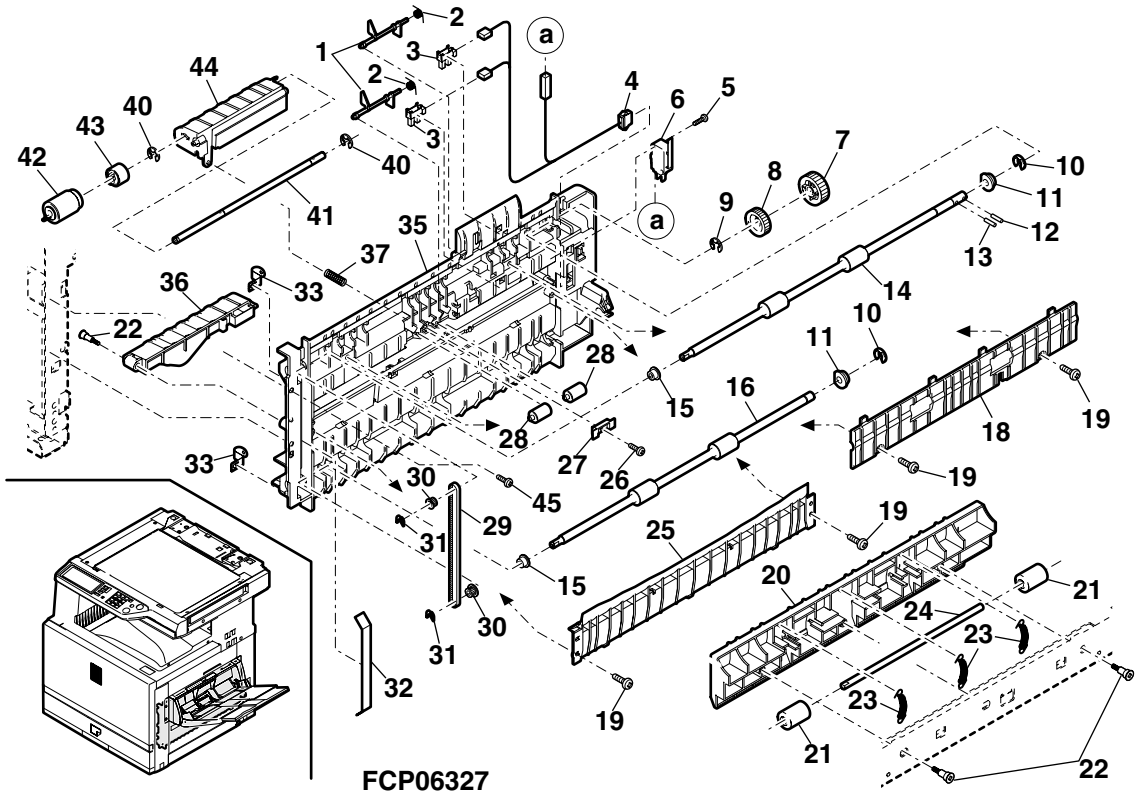

18 PS ユニット (PS unit)

NO.	PARTS CODE	PRICE RANK		NEW MARK	PART RANK	DESCRIPTION	
		Ex.	Ja.				
1	NROLP1403FCZZ	AR	FQ	N	C	PS follow roller	PS 従動ローラ
2	NBRGP0604FCZZ	AD	DJ		C	Bearing	軸受け
3	XRESP70-08000	AA	DD		C	E type ring	E- リング
4	NBLTH0373FCZZ	AF	DS	N	C	PS drive belt	PS 駆動ベルト
5	NPLYZ0352FCZZ	AE	DJ		C	PS drive pulley	PS 駆動プーリー
6	NBRGP0682FCZZ	AC	DJ	N	C	Bearing	軸受け
7	LPiNS0096FCZZ	AB	DD		C	Pin(φ3-12)	ピン
8	MSPRC2731FCZ1	AC	DJ		C	PS pressure spring	PS 加圧スプリング
9	NBRGP0626FCZZ	AC	DJ		C	Bearing(M8)	軸受け
10	NROLR1402FCZZ	AU	EZ	N	C	PS roller	PS ローラ
11	PSHEP4972FCZ1	AE	DS	N	C	PS front sheet A	PS 前シート A
12	PGiDM1979FCZZ	AH	DX	N	C	PS front PG	PS 前ペーパーガイド
13	DHAi-3342FCZZ	AE	DS	N	C	PPD2 harness	PPD2 ハーネス
14	MLEVP0857FCZZ	AF	DJ	N	C	PS front actuator	PS 前アクチュエータ
15	MSPRD3097FCZZ	AC	DJ	N	C	PS front actuator spring	PS 前アクチュエータスプリング
16	LFRM-1076FCZZ	AN	EG	N	C	PS frame	PS フレーム
17	XEBSD30P08000	AA	DD		C	Screw(3×8)	ビス
18	CPWBF0083RS51	AU	EZ		E	Sensor PWB	センサー基板
19	PSHEP4985FCZ1	AE	DJ	N	C	PS front sheet B	PS 前シート B
20	MSPRC3104FCZZ	AD	DJ	N	C	PS earth spring	PS アーススプリング
	(Unit)						
901	CFRM-1076DS51	BD	GN	N	C	PS unit(Without No.4)	PS ユニット (No.4 除く)

18 PS ユニット (PS unit)

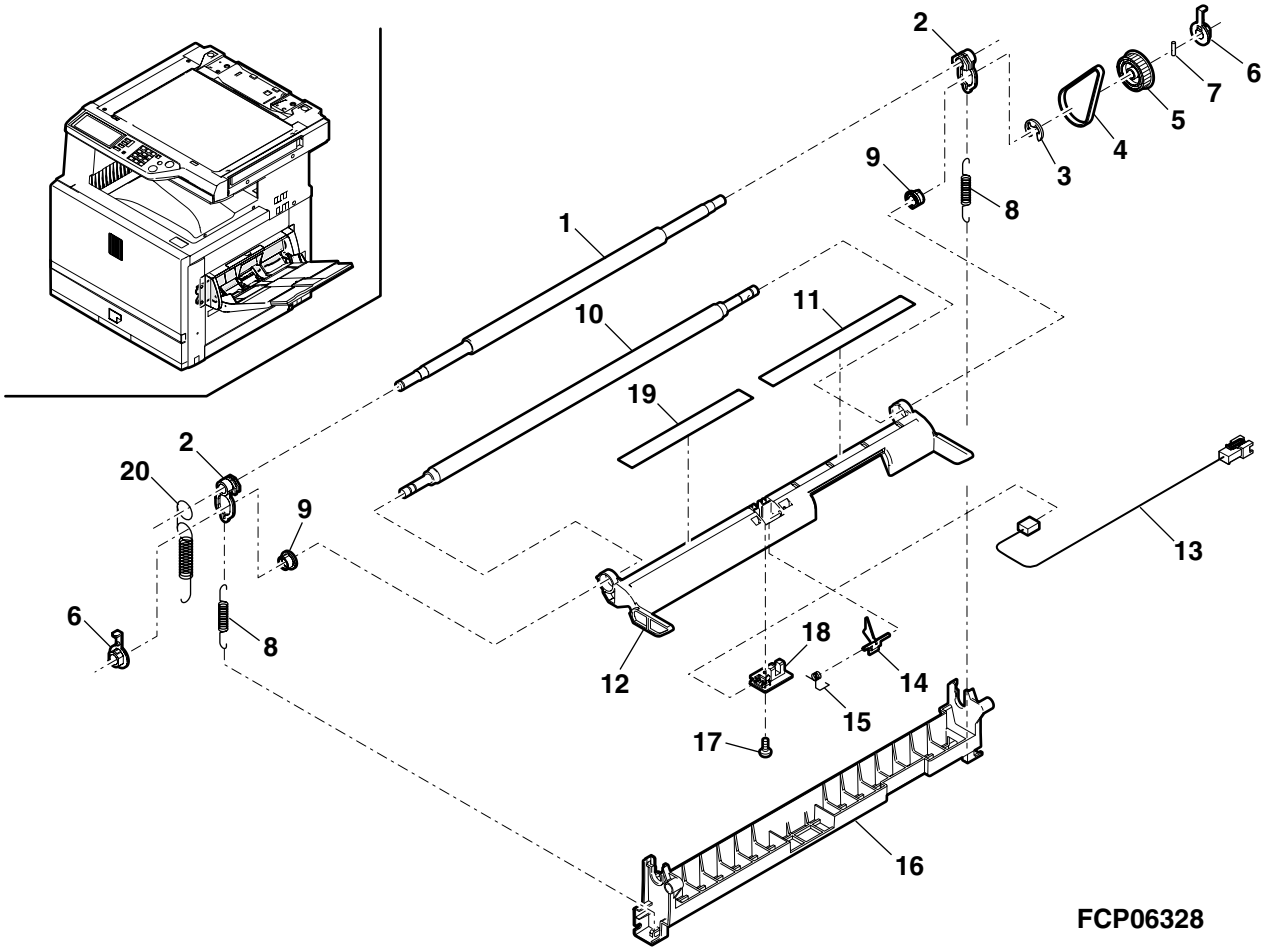

19 転写ﾍﾞﾙﾄﾕﾆｯﾄ 1(Transfer belt unit 1)

NO.	PARTS CODE	PRICE RANK		NEW MARK	PART RANK	DESCRIPTION	
		Ex.	Ja.				
1	PSHEZ4973FCZZ	AH	DX	N	B	Electric discharge sheet W	除電ｼｰﾄ W
2	NBRGP0677FCZZ	AC	DJ	N	B	Bearing	軸受け
3	NROLR1391FCZZ	AY	FQ	N	A	Transfer roller W	転写ﾛｰﾗ W
4	NBRGP0678FCZZ	AF	DS	N	B	Bearing	軸受け
5	NBRGP0675FCZZ	AH	DX	N	B	Bearing	軸受け
6	XRESP40-06000	AA	DD		C	E type ring	E-ﾘﾝｸﾞ
7	XRESP50-06000	AA	DD		C	E type ring	E-ﾘﾝｸﾞ
8	MSPRD3046FCZZ	AD	DJ	N	C	Transfer roller electrode C spring	転写ﾛｰﾗｰ電気 C ｽﾌﾟﾘﾝｸﾞ
9	MSPRC3047FCZZ	AB	DJ	N	C	Transfer roller pressure spring	転写ﾛｰﾗｰ加圧ｽﾌﾟﾘﾝｸﾞ
10	LFRM-1064FCZ1	AT	EZ	N	C	Belt frame	ﾍﾞﾙﾄﾊｳｼﾞﾝｸﾞ
13	LX-BZ0949FCZZ	AC	DD	N	C	Screw	ﾋﾞｽ
14	LPLTM5986FCZZ	AD	DJ	N	C	Housing fixing plate	ﾊｳｼﾞﾝｸﾞ取付けﾌﾟﾚｰﾄ
16	MSPRD3045FCZZ	AD	DJ	N	C	Transfer roller electrode k spring	転写ﾛｰﾗｰ電気 K ｽﾌﾟﾘﾝｸﾞ
17	CROLM1390FC01	AW	FG	N	B	Belt sub roller	ﾍﾞﾙﾄ従動ﾛｰﾗｰ
18	NSFTZ2690FCZ1	AL	EB	N	C	Belt sub roller shaft	ﾍﾞﾙﾄ従動ﾛｰﾗｼｬﾌﾄ
19	MSPRC3044FCZ1	AD	DJ	N	C	Belt tension spring	ﾍﾞﾙﾄﾃﾝｼｮﾝｽﾌﾟﾘﾝｸﾞ
20	NBRGP0676FCZ1	AC	DJ	N	C	Bearing	軸受け
22	QEARP0139FCZZ	AD	DJ	N	C	Belt earth plate J	ﾍﾞﾙﾄｱｰｽ板 J
23	XEBSD30P06000	AA	DD		C	Screw(3×6)	ﾋﾞｽ
24	NSFTZ2689FCZZ	AR	EQ	N	C	Belt idle shaft	ﾍﾞﾙﾄｱｲﾄﾞﾙｼｬﾌﾄ
25	QEARP0138FCZZ	AE	DJ	N	C	Belt earth plate K	ﾍﾞﾙﾄｱｰｽ板 K
26	LHLDZ1509FCZZ	AF	DS	N	C	Belt presure holder	ﾍﾞﾙﾄ加圧ﾎﾙﾀﾞｰ
27	MSPRC3109FCZZ	AC	DJ	N	C	Belt pressure spring	ﾍﾞﾙﾄ加圧ｽﾌﾟﾘﾝｸﾞ
28	XHBSD30P10000	AA	DD		C	Screw(3×10)	ﾋﾞｽ
29	LHLDZ1539FCZZ	AD	DJ	N	C	Belt holder	ﾍﾞﾙﾄﾎﾙﾀﾞ-
30	XEBSD30P08000	AA	DD		C	Screw(3×8)	ﾋﾞｽ
32	CROLM1404DS51	BB	GD	N	E	Belt drive roller unit	ﾍﾞﾙﾄ駆動ﾛｰﾗｰﾕﾆｯﾄ
34	PBRSR0222FCZZ	AK	DX	N	B	Belt CL brush	ﾍﾞﾙﾄ CL ﾌﾞﾗｼ
35	PBRSR0223FCZ1	AL	EB	N	B	Roller CL brush	ﾛｰﾗ CL ﾌﾞﾗｼ
36	PSHEP5087FCZZ	AC	DJ	N	C	Earth plate fixing sheet	ｱｰｽﾌﾟﾚｰﾄ押えｼｰﾄ
37	NBRGP0674FCZZ	AE	DJ	N	C	Bearing	軸受け
38	LPLTM5714FCZZ	AB	DJ		C	M3 Plate	M3 ﾌﾟﾚｰﾄ
39	LX-BZ0965FCZZ	AE	DS	N	C	Screw	ﾋﾞｽ
40	PSHEZ5130FCZZ	AA	DJ	N	C	Plate fixing sheet	ﾌﾟﾚｰﾄ押さえｼｰﾄ
	(Unit)						
901	DUNT-7188DS11	CE	UF	N	A	Transfer belt unit(Include Block 20, Without No.39) 転写ﾍﾞﾙﾄﾕﾆｯﾄ (ﾌﾞﾛｯｸ 20 含む。No.39 除く)	(Japan)
901	DUNT-7188DS12	CE	UF	N	A	Transfer belt unit(Include Block 20, Without No.39) 転写ﾍﾞﾙﾄﾕﾆｯﾄ (ﾌﾞﾛｯｸ 20 含む。No.39 除く)	(Except Japan)

19 転写ﾍﾞﾙﾄﾕﾆｯﾄ 1(Transfer belt unit 1)

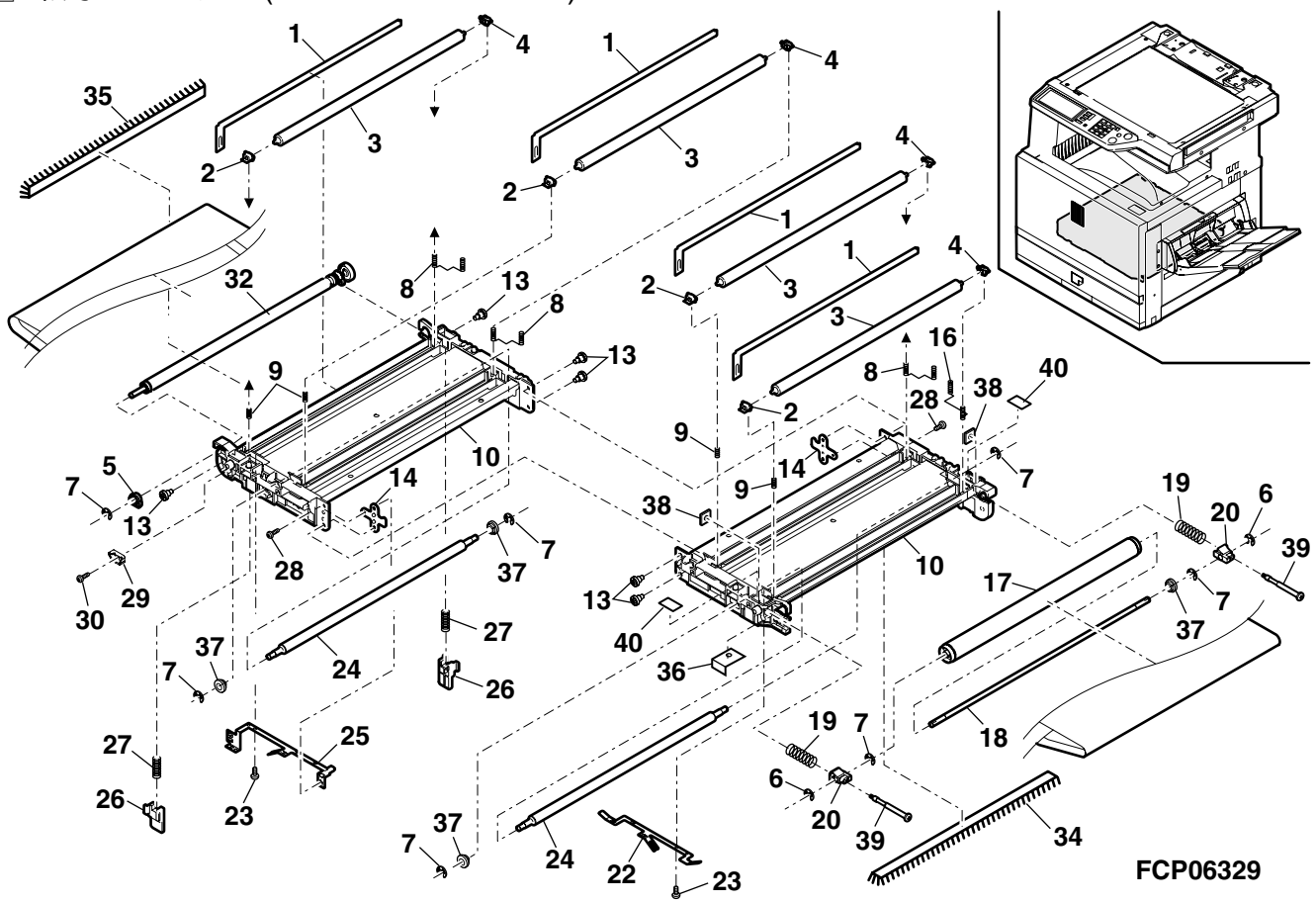

20 転写ﾍﾞﾙﾄﾕﾆｯﾄ 2(Transfer belt unit 2)

NO.	PARTS CODE	PRICE RANK Ex.	PRICE RANK Ja.	NEW MARK	PART RANK	DESCRIPTION	
1	VHPGP2TC21／／1	BE	GN		B	Pro con sensor(GP1A71L3)	ﾌﾟﾛｺﾝｾﾝｻｰ
2	XBBSD30P06000	AA	DD		C	Screw(3×6)	ﾋﾞｽ
3	DHAi-3414FC11	AL	EB	N	C	PCS harness	PCS ﾊｰﾈｽ
4	CPWBF1529DS51	AR	EQ	N	E	Pro con PWB	ﾌﾟﾛｺﾝ基板
5	PSEL-0853FCZZ	AC	DJ	N	C	Belt waste toner seal B	ﾍﾞﾙﾄ廃ﾄﾅｰｼｰﾙ B
6	UCLEZ0170FCZZ	AK	EB	N	A	Belt toner blade	ﾍﾞﾙﾄﾄﾅｰ受け
7	XEBSD30P06000	AA	DD		C	Screw(3×6)	ﾋﾞｽ
9	LPLTM5987FCZZ	AG	DX	N	C	Belt CL plate	ﾍﾞﾙﾄ CL ﾌﾟﾚｰﾄ
10	PSHEP4968FCZZ	AD	DJ	N	C	Belt waste toner transfer sheet	ﾍﾞﾙﾄ廃ﾄﾅｰ搬送ｼｰﾄ
11	XEBSD30P08000	AA	DD		C	Screw(3×8)	ﾋﾞｽ
12	UCLEZ0169FCZZ	AQ	EQ	N	A	Transfer blade	転写ﾌﾞﾚｰﾄﾞ
13	XHBSE30P08000	AA	DD		C	Screw(3×8)	ﾋﾞｽ
14	PSEL-0809FCZZ	AD	DJ	N	C	Waste toner cover seal	廃ﾄﾅｰｶﾊﾞｰｼｰﾙ
15	PCOVP1649FCZZ	AN	EG	N	C	Belt waste toner cover	ﾍﾞﾙﾄﾊｲｼﾄﾅｰｶﾊﾞｰ
16	PCAPH0009YSZZ	AC	DJ		C	TN cap	TN ｷｬｯﾌﾟ
17	MLEVP0843FCZ1	AC	DJ	N	C	Belt CL lever	ﾍﾞﾙﾄ CL ﾚﾊﾞｰ
18	MSPRT3049FCZZ	AC	DJ	N	C	Belt CL roller spring	ﾍﾞﾙﾄ CL ﾛｰﾗｽﾌﾟﾘﾝｸﾞ
19	NROLR1392FCZZ	BA	FX	N	A	Belt CL roller	ﾍﾞﾙﾄ CL ﾛｰﾗ
20	XRESP40-06000	AA	DD		C	E type ring	E-ﾘﾝｸﾞ
21	NGERH1500FCZZ	AD	DJ	N	B	Belt waste toner gear	ﾍﾞﾙﾄ廃ﾄﾅｰｷﾞﾔ
22	PCLC-0318FCZZ	AC	DJ	N	B	Wastle toner detector clutch	排紙ﾄﾅｰ検知ｸﾗｯﾁ
23	MLEVP0865FCZZ	AC	DS	N	C	Delivery toner detector lever A	排紙ﾄﾅｰ検知ﾚﾊﾞｰ A
24	MSPRT2414FCZZ	AC	DJ		C	SW lower pawl spring	SW 下爪ｽﾌﾟﾘﾝｸﾞ
25	NBRGP0664FCZZ	AD	DJ		C	Bearing	軸受け
26	DHAi-3350FC11	AV	FG	N	C	Belt drawer harness	ﾍﾞﾙﾄﾄﾞﾛｱﾊｰﾈｽ
27	PCASZ0298FCZZ	AQ	EQ	N	C	Belt wastle toner transfer case	ﾍﾞﾙﾄ廃ﾄﾅｰ搬送ｹｰｽ
28	PMLT-1288FCZ1	AB	DJ	N	C	Belt wastle toner cushion A	ﾍﾞﾙﾄ排紙ﾄﾅｰﾓﾙﾄ A
30	PMLT-1287FCZZ	AB	DJ	N	C	Waste toner auger cushion	廃ﾄﾅｰｵｰｶﾞﾓﾙﾄ
31	NSFTZ2712FCZ1	AN	EG	N	C	Belt waste toner transfer shaft	ﾍﾞﾙﾄ廃ﾄﾅｰ搬送ｼｬﾌﾄ
32	XRESP50-06000	AA	DD		C	E type ring	E-ﾘﾝｸﾞ
33	LHLDZ1519FCZZ	AW	FG	N	C	Process control sensor holder	ﾌﾟﾛｺﾝｾﾝｻｰﾎﾙﾀﾞｰ
34	XBBSD30P04000	AA	DD		C	Screw(3×4)	ﾋﾞｽ
35	RPLU-0013QSZZ	AN	EG		B	Transport solenoid	搬送ｿﾚﾉｲﾄﾞ
36	XEBSD30P10000	AA	DD		C	Screw(3×10)	ﾋﾞｽ
37	LX-BZ0036GCZZ	AC	DD		C	Screw	ﾋﾞｽ
38	RMOTS0881FCZZ	BC	GD	N	B	Belt drive motor PM	ﾍﾞﾙﾄ駆動ﾓｰﾀ PM
39	CPLTM6011FC02	AS	EQ	N	C	Belt drive plate	ﾍﾞﾙﾄ駆動ﾌﾟﾚｰﾄ
40	XEBSD40P08000	AA	DD		C	Screw(4×8)	ﾋﾞｽ
41	TLABH4747FCZ1	AH	DX	N	C	Transfer belt caution label (Japan)	ﾃﾝｼﾔﾍﾞﾙﾄﾁｭｳｲﾗﾍﾞﾙ
	TLABH4747FCZZ	AE	DJ	N	C	Transfer belt caution label (Except Japan)	ﾃﾝｼﾔﾍﾞﾙﾄﾁｭｳｲﾗﾍﾞﾙ
42	XHBSD30P06000	AA	DD		C	Screw(3×6)	ﾋﾞｽ
43	LDAiU0656FCZZ	AF	DS	N	C	Belt idle fixing base	ﾍﾞﾙﾄｱｲﾄﾞﾙ固定板
44	NGERH1499FCZZ	AG	DX	N	B	Belt idle gear	ﾍﾞﾙﾄｱｲﾄﾞﾙｷﾞﾔ
45	LX-WZ2011SCZZ	AA	DD		C	Washer	ﾎﾟﾘｽﾗｲﾀﾞｰ
46	PSHT-0094FCZZ	AD	DJ	N	C	Process control shutter	ﾌﾟﾛｺﾝｼｬｯﾀｰ
47	PCOVP1648FCZ1	AE	DJ	N	C	Belt gear cover	ﾍﾞﾙﾄｷﾞｱｶﾊﾞｰ
48	MSPRT3165FCZZ	AC	DJ	N	C	Process control shutter spring	ﾌﾟﾛｺﾝｼｬｯﾀｰｽﾌﾟﾘﾝｸﾞ
49	QSW-B0017QSZZ	AF	DS	N	B	Tray detect switch	ｶｾｯﾄ検知ｽｲｯﾁ
50	TLABZ4772FCZ1	AF	DJ	N	B	Criterion label	基準ﾗﾍﾞﾙ
51	XEPSD30P08X00	AA	DD		C	Screw(3×8X)	ﾋﾞｽ
52	PSEL-0831FCZZ	AC	DJ	N	C	Belt waste toner seal A	ﾍﾞﾙﾄ廃ﾄﾅｰｼｰﾙ A
53	PSEL-0832FCZZ	AC	DJ	N	C	Belt waste toner seal B	ﾍﾞﾙﾄ廃ﾄﾅｰｼｰﾙ B
54	PSEL-0855FCZZ	AA	DJ	N	C	Belt waste toner seal D	ﾍﾞﾙﾄ廃ﾄﾅｰｼｰﾙ D
55	PSEL-0854FCZZ	AA	DJ	N	C	Belt waste toner seal C	ﾍﾞﾙﾄ廃ﾄﾅｰｼｰﾙ C
56	PSHEP5076FCZZ	AC	DJ	N	C	Harnes fixing sheet	ﾊｰﾈｽ押えｼｰﾄ
57	PSHEZ4974FCZZ	AC	DJ	N	B	Belt cushion	ﾍﾞﾙﾄﾓｹｯﾄ
60	MSPRC3106FCZZ	AC	DJ	N	C	Waste toner detector clutch spring	廃ﾄﾅｰ検知ｸﾗｯﾁｽﾌﾟﾘﾝｸﾞ
61	LX-WZ0445FCZ1	AC	DD	N	C	Washer	ﾎﾟﾘｽﾗｲﾀﾞｰ
62	TCADZ1595FCZZ	AC	DJ	N	C	Transfer belt fixing release manual	転写ﾍﾞﾙﾄ固定解除手順書
63	PSHEZ5126FCZZ	AF	DS	N	C	Blade protect sheet	ﾌﾞﾚｰﾄﾞ保護ｼｰﾄ
501	CCASZ0298DS52	BK	HG	N	A	Belt wastle toner unit	ﾍﾞﾙﾄﾄﾅｰﾕﾆｯﾄ
	(Unit)						
901	DUNT-7188DS11	CE	UF	N	A	Transfer belt unit(Include Block 19、Without No.62,63) 転写ﾍﾞﾙﾄﾕﾆｯﾄ(ﾌﾞﾛｯｸ 19 含む。No.62,63 除く)	(Japan)
901	DUNT-7188DS12	CE	UF	N	A	Transfer belt unit(Include Block 19、Without No.62,63) 転写ﾍﾞﾙﾄﾕﾆｯﾄ(ﾌﾞﾛｯｸ 19 含む。No.62,63 除く)	(Except Japan)

21 転写ﾘﾌﾄｱｯﾌﾟﾕﾆｯﾄ (Transfer lift-up unit)

NO.	PARTS CODE	PRICE RANK Ex.	PRICE RANK Ja.	NEW MARK	PART RANK	DESCRIPTION	
1	NSFTZ2691FCZZ	AU	EZ	N	C	Belt lift-up cam shaft	ﾍﾞﾙﾄﾘﾌﾄｱｯﾌﾟｶﾑｼｬﾌﾄ
2	XRESP70-08000	AA	DD		C	E type ring	E-ﾘﾝｸﾞ
3	LPLTP6098FCZZ	AD	DJ	N	C	Belt lift-up detector plate	ﾍﾞﾙﾄﾘﾌﾄｱｯﾌﾟ検知ﾌﾟﾚｰﾄ
4	MCAMP0106FCZZ	AC	DJ	N	C	Belt lift-up cam	ﾍﾞﾙﾄﾘﾌﾄｱｯﾌﾟｶﾑ
5	LPiNS0096FCZZ	AB	DD		C	Pin(φ3-12)	ﾋﾟﾝ
6	CFRM-1066FC02	AK	EB	N	C	Belt lift up frame F	ﾍﾞﾙﾄﾘﾌﾄｱｯﾌﾟﾌﾚｰﾑ F
7	NSFTZ2730FCZZ	AK	EB	N	C	Belt brake shaft	ﾍﾞﾙﾄﾌﾞﾚｰｷｼｬﾌﾄ
8	NGERH1525FCZZ	AD	DJ	N	C	Belt brake gear	ﾍﾞﾙﾄﾌﾞﾚｰｷｷﾞﾔ
9	LX-WZ0445FCZ1	AC	DD	N	C	Washer(M16)	ﾎﾟﾘｽﾗｲﾀﾞｰ
10	MSPRC3077FCZ1	AC	DJ	N	C	Belt lift-up spring	ﾍﾞﾙﾄﾘﾌﾄｱｯﾌﾟｽﾌﾟﾘﾝｸﾞ

21 転写ﾘﾌﾄｱｯﾌﾟﾕﾆｯﾄ (Transfer lift-up unit)

NO.	PARTS CODE	PRICE RANK		NEW MARK	PART RANK	DESCRIPTION	
		Ex.	Ja.				
11	XWHSD30−08100	AA	DD		C	Washer	ﾋﾗ ﾜｯｼｬ
12	LX−BZ0916FCZZ	AA	DD		C	Screw	ﾋﾞｽ
13	NBRGC0319FCZ1	AC	DJ		C	Bearing	軸受け
14	PCLR−0474FCZZ	AC	DJ	N	C	Belt lift-up collar	ﾍﾞﾙﾄﾘﾌﾄｱｯﾌﾟｶﾗｰ
15	XHBSD30P06000	AA	DD		C	Screw(3×6)	ﾋﾞｽ
16	XRESP40−06000	AA	DD		C	E type ring	E-ﾘﾝｸﾞ
17	NGERH1504FCZZ	AD	DJ	N	C	Waste toner idle gear(42T)	廃ﾄﾅｰｱｲﾄﾞﾙｷﾞﾔ
18	CARMM0286FC01	AG	DX	N	C	Wastle toner gear arm	ﾊｲﾄﾅｰｷﾞﾔｱｰﾑ
19	NGERH1503FCZZ	AC	DJ	N	C	Lift-up gear(12/24T)	ﾘﾌﾄｱｯﾌﾟｷﾞﾔ
20	MSPRT3050FCZZ	AC	DJ	N	C	Wastle toner gear aem spring	廃ﾄﾅｰｷﾞｱｱｰﾑｽﾌﾟﾘﾝｸﾞ
21	CFRM−1066FC01	AQ	EQ	N	C	Belt lift up frame R	ﾍﾞﾙﾄﾘﾌﾄｱｯﾌﾟﾌﾚｰﾑ R
22	NGERH1505FCZZ	AD	DJ	N	C	Waste toner idle gear(12/18T)	廃ﾄﾅｰｱｲﾄﾞﾙｷﾞﾔ
23	NGERH1502FCZZ	AD	DJ	N	C	Lift-up gear(16/36T)	ﾘﾌﾄｱｯﾌﾟｷﾞﾔ
24	NGERH1501FCZZ	AK	EB	N	B	Belt lift-up gear(44T)	ﾍﾞﾙﾄﾘﾌﾄｱｯﾌﾟｷﾞﾔ
25	VHPGP1A71L3−1	AG	DS	N	B	Photo sensor(GP1A71L3)	ﾌｫﾄｾﾝｻｰ
26	DHAi−3344FCZZ	AF	DS	N	C	BLUD harness	BLUD ﾊｰﾈｽ
27	PSHEP4986FCZZ	AC	DJ	N	C	Lift-up edge protect sheet	ﾘﾌﾄｱｯﾌﾟｴｯｼﾞ保護ｼｰﾄ
28	LSTYM0293FCZZ	AP	EQ	N	C	Belt lift-UP stay	ﾍﾞﾙﾄﾘﾌﾄｱｯﾌﾟｽﾃｰ
29	RMOTS0882FCZZ	BA	FX	N	B	Belt lift up motor	ﾍﾞﾙﾄﾘﾌﾄｱｯﾌﾟﾓｰﾀ

20 転写ﾍﾞﾙﾄﾕﾆｯﾄ 2(Transfer belt unit 2)

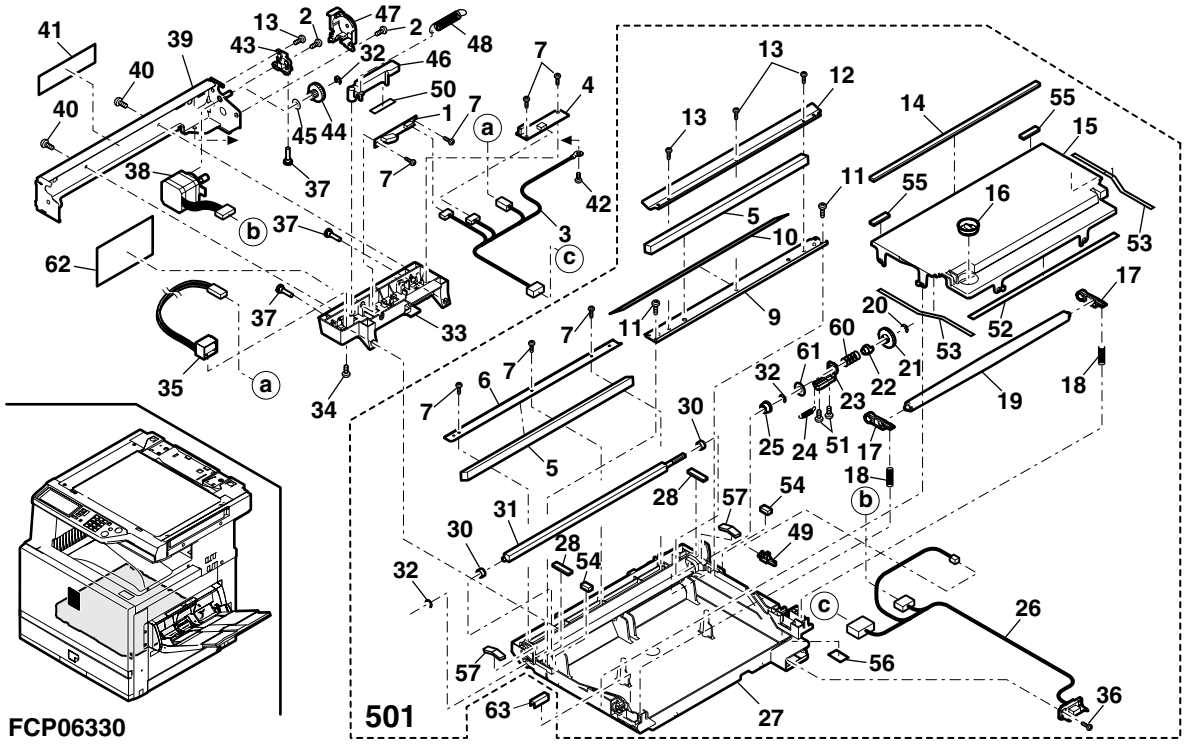

FCP06330

21 転写ﾘﾌﾄｱｯﾌﾟﾕﾆｯﾄ (Transfer lift-up unit)

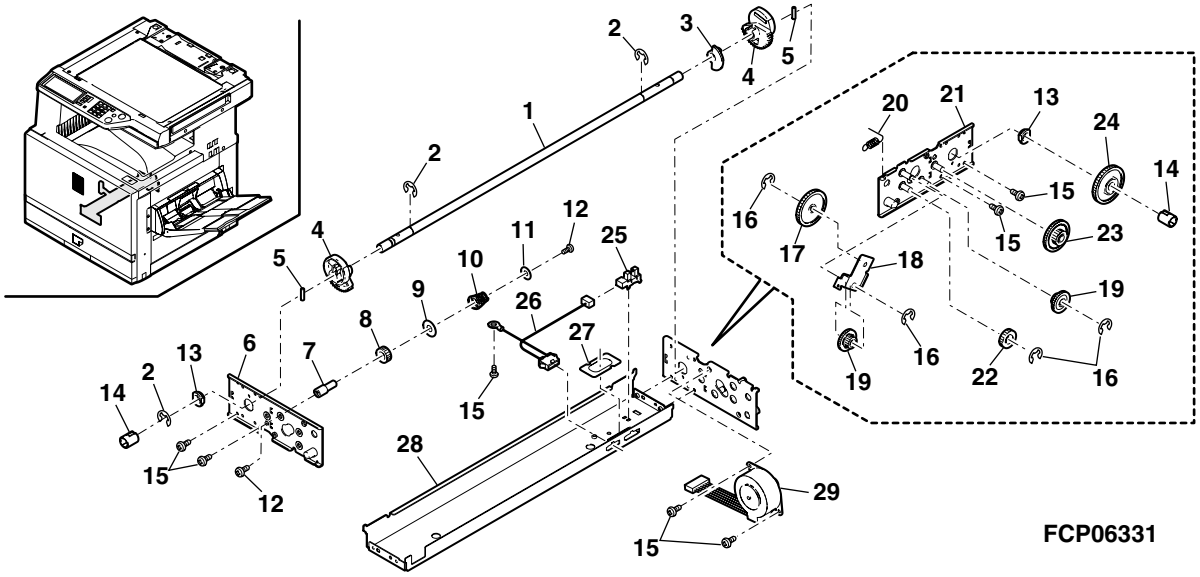

FCP06331

22 ﾌﾟﾛｾｽﾕﾆｯﾄ (Process unit)

NO.	PARTS CODE	PRICE RANK Ex.	PRICE RANK Ja.	NEW MARK	PART RANK	DESCRIPTION	
1	XBBS230P08000	AA	DD		C	Screw(3×8)	ﾋﾞｽ
2	CFRM-1084DS51	AR	EQ	N	E	MC frame unit	MC ﾌﾚｰﾑﾕﾆｯﾄ
3	TLABZ4766FCZ1	AC	DJ	N	C	ARW-label-BK	ARW ﾗﾍﾞﾙ BK
4	CCASZ0302DS51	BB	GD	N	A	MC unit	MC ﾕﾆｯﾄ
5	PSHEP5062FCZZ	AB	DJ	N	C	RFL sheet	RFL ｼｰﾄ
6	PLNS-0076FCZZ	AL	EB	N	B	DCH Lens	DCH ﾚﾝｽﾞ
7	LPLTM5714FCZZ	AB	DJ		C	M3 plate	M3 ﾌﾟﾚｰﾄ
8	PSHEZ5027FCZZ	AB	DJ	N	B	Cleaning sheet	ｸﾘｰﾆﾝｸﾞｼｰﾄ
9	NGERH1529FCZZ	AC	DJ	N	C	WTN-gear-21T(21T)	ｷﾞﾔ
10	CFRM-1083DS72	AQ	EQ	N	E	Process frame unit	ﾌﾟﾛｾｽﾌﾚｰﾑﾕﾆｯﾄ
11	PSHEZ4997FCZ1	AC	DJ	N	A	Side sheet F	ｻｲﾄﾞｼｰﾄ F
12	PSHEZ4998FCZ1	AB	DJ	N	A	Side sheet R	ｻｲﾄﾞｼｰﾄ R
13	PSHEP5061FCZ1	AD	DJ	N	C	BLC sheet	BLC ｼｰﾄ
14	UCLEZ0171FCZ2	AX	FG	N	A	Cleaner blade	ｸﾘｰﾅｰﾌﾞﾚｰﾄﾞ
15	PSHEP5089FCZZ	AA	DJ	N	C	Blade side sheet	ﾌﾞﾚｰﾄﾞｻｲﾄﾞｼｰﾄ
16	CSFTZ2716DS51	AP	EQ	N	C	Drum shaft	ﾄﾞﾗﾑｼｬﾌﾄ
17	XEBSD30P08000	AA	DD		C	Screw(3×8)	ﾋﾞｽ
18	UCLEZ0172FCZ1	AQ	EQ	N	A	WTN cleaner seel	WTN ｸﾘｰﾅｰｼｰﾙ
19	QEARP0140FCZZ	AD	DJ	N	C	GND earth CL	GND-ｱｰｽ -CL
20	NBRGP0688FCZ1	AD	DJ	N	C	Bearing	軸受け
21	LSTPP0011QSZZ	AC	DJ		C	Stopper	ｽﾄｯﾊﾟｰ
22	XEBSD40P10000	AA	DD		C	Screw(3×10)	ﾋﾞｽ
23	TLABZ4753FCZZ	AA	DJ	N	C	Color label Y	ｶﾗｰﾗﾍﾞﾙ Y
	TLABZ4754FCZZ	AA	DJ	N	C	Color label M	ｶﾗｰﾗﾍﾞﾙ M
	TLABZ4755FCZZ	AA	DJ	N	C	Color label C	ｶﾗｰﾗﾍﾞﾙ C
	TLABZ4756FCZZ	AB	DJ	N	C	Color label BK	ｶﾗｰﾗﾍﾞﾙ BK
24	JHNDP0167FCZ2	AC	DJ	N	C	MC cleaner handle	MC CLE ﾊﾝﾄﾞﾙ
25	NSFTZ2736FCZZ	AP	EQ	N	C	MC cleaner shaft	MC ｸﾘｰﾅｰｼｬﾌﾄ
26	PMLT-1312FCZZ	AB	DJ	N	C	Cleaner cushion	ｸﾘｰﾅｰﾓﾙﾄ
27	LPLTM6112FCZZ	AH	DX	N	C	Process frame RFC	ﾌﾟﾛｾｽﾌﾚｰﾑ RFC
28	NBRGP0687FCZZ	AG	DS	N	C	Bearing	軸受け
29	PSEL-0829FCZ1	AC	DJ	N	C	Blade seal	ﾌﾞﾚｰﾄﾞｼｰﾙ
30	PSHEZ5099FCZ1	AC	DJ	N	C	DCT sheet	DCT ｼｰﾄ
31	PSEL-0835FCZ1	AC	DJ	N	C	Drop seal	ﾄﾞﾛｯﾌﾟｼｰﾙ
32	PSEL-0864FCZZ	AD	DJ	N	C	Drop seal BRS	ﾄﾞﾛｯﾌﾟｼｰﾙ BRS
33	PSEL-0830FCZZ	AA	DJ	N	C	STP seal PIP	STP ｼｰﾙ PIP
34	PSEL-0866FCZZ	AB	DJ	N	C	PIP seal TOP	PIP ｼｰﾙ TOP
35	PSHEP5121FCZZ	AA	DJ	N	C	RING sheet PIP	RING ｼｰﾄ PIP
	(Unit)						
901	CFRM-1083DS51	BK	HC	N	E	Process unit(Without No.3,16,21,23) (U.S.A Other countries)	ﾌﾟﾛｾｽﾕﾆｯﾄ (No.3,16,21,23 除く)
	CFRM-1083DS52	BH	HC	N	E	Process unit(Without No.3,16,21,23) (Japan,Europe,Australia,New Zealand)	ﾌﾟﾛｾｽﾕﾆｯﾄ (No.3,16,21,23 除く)

22 ﾌﾟﾛｾｽﾕﾆｯﾄ (Process unit)

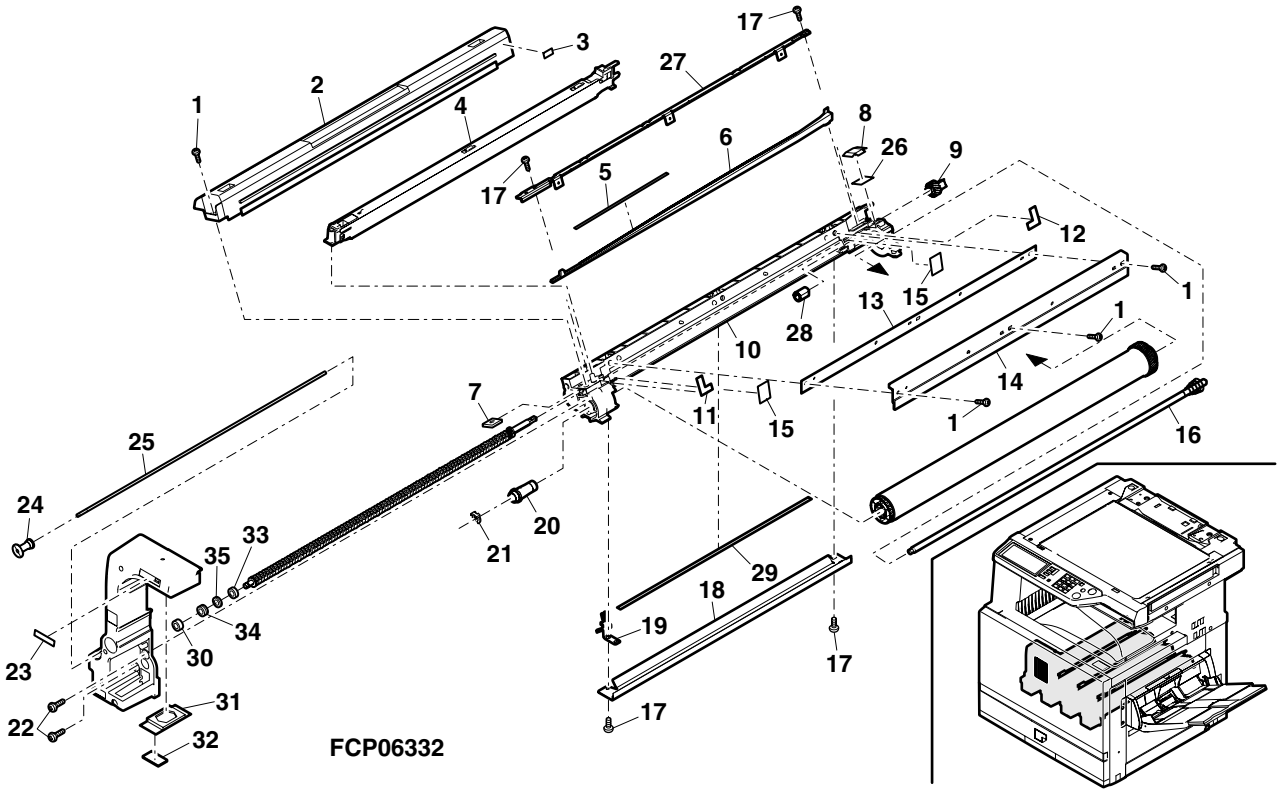

23 ﾄﾞﾗﾑ駆動ﾕﾆｯﾄ (Drum drive unit)

NO.	PARTS CODE	PRICE RANK		NEW MARK	PART RANK	DESCRIPTION	
		Ex.	Ja.				
1	DHAi-3351FCZZ	AD	DJ	N	C	MC CMY harness	MC CMY ﾊｰﾈｽ
2	DHAi-3349FCZZ	AD	DJ	N	C	Drive interface high voltage harness	駆動間高圧ﾊｰﾈｽ
3	XHBSD30P06000	AA	DD		C	Screw(3×6)	ﾋﾞｽ
4	DHAi-3365FCZZ	AH	DX	N	C	TES harness	TES ﾊｰﾈｽ
5	LFRM-1062FCZZ	AP	EQ	N	C	DR drive frame T	DR 駆動ﾌﾚｰﾑ T
6	NBRGC0672FCZZ	AE	DJ	N	C	Bearing	軸受け
7	XEBSD40P08000	AA	DD		C	Screw(4×8)	ﾋﾞｽ
8	LHLDW1155FCZZ	AC	DJ		C	Wire holder(LWS3S2W)	ﾎﾙﾀﾞｰ
9	MSPRP3038FCZZ	AC	DJ	N	C	Drive shaft electrode spring	駆動軸ｱｰｽｽﾌﾟﾘﾝｸﾞ
10	RMOTS0879FCZZ	BD	GN	N	B	Drum drive motor	ﾄﾞﾗﾑ駆動ﾓｰﾀ
11	LANGT1411FCZZ	AD	DJ	N	C	Drive PWB fixing angle	ﾄﾞﾗｲﾌﾞ基板取付けｱﾝｸﾞﾙ
12	CFRM-1061DS71	AV	FG	N	E	DR drive frame B sub	DR 駆動ﾌﾚｰﾑ B ｻﾌﾞ
13	PRNGP0110FCZZ	AA	DJ	N	C	Ring	ﾘﾝｸﾞ
14	NCPL-0056FCZZ	AF	DS	N	B	Drum joint cupling	ﾄﾞﾗﾑ連結ｶｯﾌﾟﾘﾝｸﾞ
15	VHPGP1A71L3-1	AG	DS	N	B	Photo sensor(GP1A71L3)	ﾌｫﾄｾﾝｻｰ
16	MLEVP0842FCZZ	AE	DS	N	C	Enpty detector lever	満杯検知ﾚﾊﾞｰ
18	XRESP80-08000	AA	DD		C	E type ring	E- ﾘﾝｸﾞ
19	LPiNS0096FCZZ	AB	DD		C	Pin(φ3-12)	ﾋﾟﾝ
21	CSFTZ2686DS51	AV	FG	N	E	DR drive shaft	DR 駆動ｼｬﾌﾄ
22	MSPRD3042FCZZ	AD	DJ	N	C	DV electrode spring	DV 接点ｽﾌﾟﾘﾝｸﾞ
23	MSPRD3041FCZZ	AD	DJ	N	C	GB electrode spring	GB 接点ｽﾌﾟﾘﾝｸﾞ
24	LPLTM6003FCZZ	AD	DJ	N	C	MC joint terminal plate	MC 接続端子ﾌﾟﾚｰﾄ
25	MSPRD3040FCZZ	AC	DJ	N	C	MC electrode spring	MC 接点ｽﾌﾟﾘﾝｸﾞ
27	CPWBF1526DS51	AP	EQ	N	C	LED DL PWB	LED DL 基板
28	XHBSE40P08000	AA	DD		C	Screw(4×8)	ﾋﾞｽ
29	RMOTS0879FCNA	BD	GN	N	B	Drum drive motor BK	ﾄﾞﾗﾑ駆動ﾓｰﾀ BK
30	LHLDW1061FCZZ	AB	DD		C	Holder(HL-18-0)	ﾎﾙﾀﾞｰ
	(Unit)						
901	DUNT-7251DSZZ	BZ	TF	N	E	Drum drive unit(Without No.4,11,28)	ﾄﾞﾗﾑ駆動ﾕﾆｯﾄ(No.4,11,28除く)

23 ﾄﾞﾗﾑ駆動ﾕﾆｯﾄ (Drum drive unit)

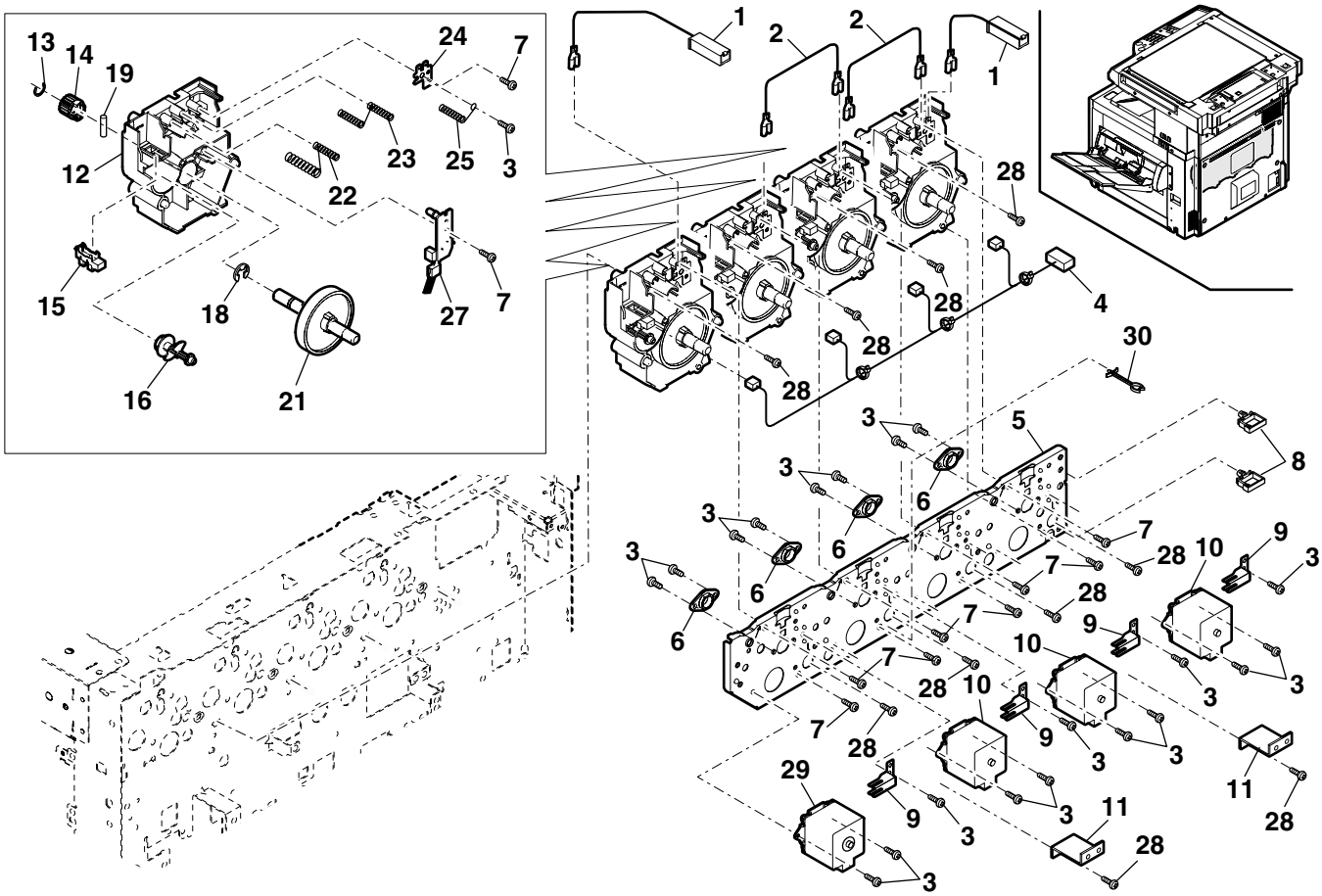

FCP06333

24 定着ユニット 1(Fusing unit 1)

NO.	PARTS CODE	PRICE RANK Ex.	PRICE RANK Ja.	NEW MARK	PART RANK	DESCRIPTION	
1	PCOVP1650FCZZ	AT	DX	N	C	Harness cover	ﾊｰﾈｽｶﾊﾞｰ
2	TLABH4746FCZZ	AH	DX	N	C	Hiht temperature caution label	高温注意ﾗﾍﾞﾙ
3	XHBS230P12000	AA	DD		C	Screw(3×8)	ﾋﾞｽ
4	XEBSD30P12000	AA	DD		C	Screw(3×12)	ﾋﾞｽ
5	MLEVP0875FCZZ	AF	DS	N	C	Fusing Open/Shut lever	定着開閉ﾚﾊﾞｰ
6	LX-WZ0443FCZZ	AB	DD		C	Washer	ｱｰｽ用ﾋﾗﾜｯｼｬｰ
7	MARMP0301FCZ1	AE	DJ	N	C	Holder rotation arm	ﾎﾙﾀﾞｰ回転ｱｰﾑ
8	LHLDR1511FCZ1	BA	FX	N	C	Roller holder	ﾛｰﾗｰﾎﾙﾀﾞｰ
9	MSPRP3056FCZZ	AF	DS	N	C	Delivery roller spring	排紙ｺﾛ板ﾊﾞﾈ
10	PCLR-0475FCZZ	AA	DJ	N	C	Delivery collar	排紙ｺﾛ
11	PCOVP1636FCZ1	AW	EZ	N	C	Fusing enter cover	定着入紙ｶﾊﾞｰ
12	MSPRP3052FCZZ	AG	DS	N	C	Lamp electrode spring A	ﾗﾝﾌﾟ電極 A ｽﾌﾟﾘﾝｸﾞ
13	DHAi-3353FCZZ	AY	FQ	N	C	Fusing upper harness (100V Series)	定着上ﾊｰﾈｽ
	DHAi-3399FCZZ	AY	FQ	N	C	Fusing upper harness (200V Series)	定着上ﾊｰﾈｽ
14	XEBSD30P06000	AA	DD		C	Screw(3×6)	ﾋﾞｽ
15	XBPSD30P06KS0	AA	DD		C	Screw(3×6KS)	ﾋﾞｽ
17	XHBS230P06000	AA	DD		C	Screw(3×6)	ﾋﾞｽ
18	PCOVP1637FCZZ	AN	EQ	N	C	Fusing fromt cover	定着前ｶﾊﾞｰ
19	XHBSD30P06000	AA	DD		C	Screw(3×6)	ﾋﾞｽ
20	LX-BZ0736FCZZ	AB	DD		C	Screw	DV 駆動ﾀﾞﾝﾋﾞｽ
21	LFRM-1069FCZZ	AL	EB	N	C	Fusing upper frame F	定着上ﾌﾚｰﾑ F
22	LHLDZ1513FCZZ	AD	DJ	N	C	Lamp holder F	ﾗﾝﾌﾟﾎﾙﾀﾞｰ F
24	MSPRC3059FCZZ	AC	DJ	N	C	HR fixing spring	HR 固定ｽﾌﾟﾘﾝｸﾞ
26	LPLTM5996FCZ1	AN	EG	N	C	Thermostat fixing plate	ｻｰﾓｽﾀｯﾄ取付けﾌﾟﾚｰﾄ
27	RTHM-0022FCZZ	AN	EG		B	Thermostat(100V Only)	ｻｰﾓｽﾀｯﾄ
	CTHM-0011FC01	AK	EB		B	Thermostat(Other)	ｻｰﾓｽﾀｯﾄ
28	XWHSD30-05080	AA	DD		C	Washer	ﾋﾗ ﾜｯｼｬ
29	XHBSD30P04000	AA	DD		C	Screw(3×4)	ﾋﾞｽ
30	RDTCT0153FCZZ	AN	EQ	N	B	Thermistor	ｻｰﾐｽﾀｰ
31	XHBSD30P10000	AA	DD		C	Screw(3×10)	ﾋﾞｽ
32	CFRM-1070FC01	AP	EQ	N	C	Fusing upper frame R	定着上ﾌﾚｰﾑ R
33	NGERH1062FCZZ	AE	DS		B	DV idle gear(25T)	DV ｱｲﾄﾞﾙｷﾞﾔ
34	NGERH0780FCZ1	AE	DS		B	Fusing idle gear(26TN)	定着ｱｲﾄﾞﾙｷﾞﾔ
35	XRESP70-08000	AA	DD		C	E type ring	E-ﾘﾝｸﾞ
36	LHLDZ1512FCZZ	AR	EQ	N	C	Lamp holder R	ﾗﾝﾌﾟﾎﾙﾀﾞｰ R
37	NROLR1395FCZZ	BN	HZ	N	A	Upper heat roller	上ﾋｰﾄﾛｰﾗ
38	NBRGY0646FCZZ	AS	EQ		B	Bearing	ﾍﾞｱﾘﾝｸﾞ
39	NGERH1507FCZZ	AT	EZ	N	B	Fusing gear(60TWH)	定着ｷﾞﾔ
40	LSTPF0172FCZ1	AA	DJ		C	Roller stopper	ﾛｰﾗｰｽﾄｯﾊﾟｰ
⚠ 41	RLMPU0672FCZZ	BA	FX	N	B	Upper heater lamp (100V)	上ﾋｰﾀｰﾗﾝﾌﾟ
⚠	RLMPU0668FCZZ	BA	FX	N	B	Upper heater lamp (120V)	上ﾋｰﾀｰﾗﾝﾌﾟ
⚠	RLMPU0669FCZZ	BA	FX	N	B	Upper heater lamp (200V)	上ﾋｰﾀｰﾗﾝﾌﾟ
43	LPLTM6109FCZZ	AD	DJ	N	C	Separator pawl plate (Japan only)	剥離爪ﾌﾟﾚｰﾄ
44	PTME-0276FCZ1	AK	EB		A	Separator pawl (Japan only)	剥離爪
45	MSPRT2414FCZZ	AC	DJ		B	Separator pawl spring (Japan only)	剥離爪ｽﾌﾟﾘﾝｸﾞ
46	XHBSD30P06000	AA	DD		C	Screw(3×6) (Japan only)	ﾋﾞｽ
47	XHBS240P08000	AB	DD		C	Screw(4×8S)	ﾋﾞｽ
48	PBRSR0224FCZZ	AH	DX	N	B	Fusing discharge brush	定着除電ﾌﾞﾗｼ
49	MSPRC3160FCZZ	AC	DJ	N	C	Open/Shut presure spring	開閉圧接ｽﾌﾟﾘﾝｸﾞ
50	MSPRT3190FCZZ	AF	DS	N	C	Discharge presure spring	除電圧接ｽﾌﾟﾘﾝｸﾞ
51	LX-BZ3006SC0S	AA	DD		C	Screw(3×6)	ﾋﾞｽ
52	CPLTM6109DS51	AP	EQ		E	Separator pawl plate unit (Japan only)	剥離爪ﾌﾟﾚｰﾄﾕﾆｯﾄ
	(Unit)						
⚠	DUNTW7189DSZZ	CG	UM	N	E	Fusing unit(Include Block 25) (100V Series)	定着ﾕﾆｯﾄ(ﾌﾞﾛｯｸ 25 含む)
⚠ 901	DUNTW7189DS11	CG	UM	N	E	Fusing unit(Include Block 25) (120V Series)	定着ﾕﾆｯﾄ(ﾌﾞﾛｯｸ 25 含む)
⚠	DUNTW7189DS12	CG	UM	N	E	Fusing unit(Include Block 25) (200V Series)	定着ﾕﾆｯﾄ(ﾌﾞﾛｯｸ 25 含む)

24 定着ﾕﾆｯﾄ 1(Fusing unit 1)

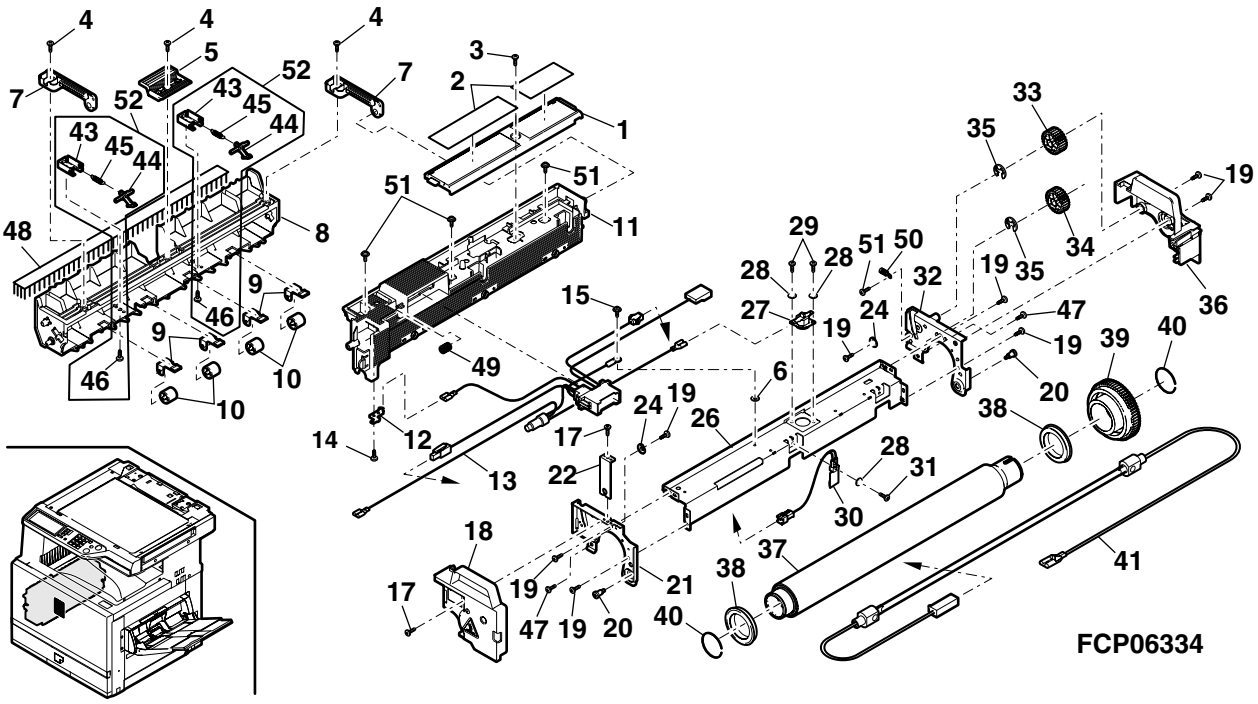

25 定着ユニット 2(Fusing unit 2)

NO.	PARTS CODE	PRICE RANK Ex.	PRICE RANK Ja.	NEW MARK	PART RANK	DESCRIPTION	
1	NROLR1394FCZ1	AT	EZ	N	C	Delivery roller	排紙ロ-ラ
2	NBRGP0012QSZZ	AC	DJ		C	Bearing	軸受け
3	XRESP50-06000	AA	DD		C	E type ring	E-リング
4	LPiNS0133FCZZ	AA	DD		C	Pin(φ2-10)	ヘイコウピン
5	NGERH0866FCZZ	AC	DD		C	Gear(22T)	ギヤ
6	JKNBZ0143FCZZ	AD	DJ	N	C	Delivery roller knob	排紙ローラーノブ
7	MSPRD3057FCZZ	AC	DJ	N	B	Actuator spring	アクチュエ-タスプリング
8	MLEVP0848FCZZ	AD	DJ	N	B	Delivery actuator	排紙アクチュエ-タ
9	VHPGP1A71L3-1	AG	DS	N	B	Photo sensor(GP1A71L3)	フォトセンサー
10	LPLTP5998FCZZ	BB	GD	N	C	Lower pawl fixing plate	下爪取付けプレート
11	MSPRT2414FCZZ	AC	DJ		B	Separator pawl spring	剥離爪スプリング
12	PTME-0276FCZ1	AK	EB		A	Fusing separator pawl lower	定着剥離爪下
⚠	RLMPU0673FCZZ	AZ	FQ	N	B	Lower heater lamp (100V)	下ヒーターランプ
⚠ 13	RLMPU0670FCZZ	AZ	FQ	N	B	Lower heater lamp (120V)	下ヒーターランプ
⚠	RLMPU0671FCZZ	AZ	FQ	N	B	Lower heater lamp (200V)	下ヒーターランプ
14	NROLR1396FCZZ	BH	HV	N	A	Lower heat roller	下ヒ-トロ-ラ
15	NBRGY0681FCZZ	AX	FG	N	B	Bearing	ベアリング
16	MSPRD3058FCZZ	AC	DJ	N	C	Roller stopper 20	ロ-ラストッパ 20
17	CPLTM5997FC01	AL	EB	N	C	Lower thermistor fixing plate	下サーミスタ取付けプレート
18	RTHM-0021FCZZ	AN	EG		B	Thermostat	サーモスタット
19	RDTCT0153FCZZ	AN	EQ	N	B	Thermistor	サーミスター
20	XWHSD30-05080	AA	DD		C	Washer	ヒラ ワッシャ
21	XHBSD30P04000	AA	DD		C	Screw(3×4)	ビス
22	XHBSD30P10000	AA	DD		C	Screw(3×10)	ビス
23	CFRM-1071FC01	AL	EB	N	C	Fusing upper frame F	定着上フレームF
24	XEBSD30P08000	AA	DD		C	Screw(3×8)	ビス
25	CFRM-1072FC01	AL	EB	N	C	Fusing lower frame R	定着下フレームR
26	LX-BZ0924FCZZ	AD	DJ		C	Screw	加圧調整ビス
27	MSPRC3054FCZZ	AE	DJ	N	C	Pressure spring	加圧スプリング
28	MLEVF0846FCZ1	AE	DS	N	C	Pressure lever R	加圧レバ-R
29	PRNGP0109FCZZ	AA	DJ	N	C	Ring	リング
30	LHLDZ1399FCZZ	AC	DJ		C	Upper lamp holder F	上ランプホルダ-F
31	XHBSD30P06000	AA	DD		C	Screw(3×6)	ビス
32	MLEVF0845FCZ1	AE	DS	N	C	Pressure lever F	加圧レバ-F
33	MLEVP0786FCZZ	AC	DD		C	Pressure adjust lever F	圧力調整レバ-F
34	LX-BZ3006SC0S	AA	DD		C	Screw(3×6)	ビス
35	PCOVP1638FCZZ	AZ	FX	N	C	Fusing lower cover	定着下カバー
36	MLEVP0787FCZZ	AC	DD		C	Pressure adjust lever R	圧力調整レバ-R
37	PSHEP5015FCZZ	AD	DJ	N	C	Harness fixing sheet	ハーネス押えシート
38	XEBSD30P06000	AA	DD		C	Screw(3×6)	ビス
39	PGiDH1968FCZZ	AK	EB	N	C	Fusing front guide PG	定着前ペーパーガイド
40	XHBS230P06000	AA	DD		C	Screw(3×6)	ビス
41	DHAi-3354FC11	AH	DX	N	C	Fusing lower harness	定着下ハーネス
42	LX-WZ0448FCZZ	AB	DD	N	C	Washer	ポリスライダー
43	PSHEP5127FCZZ	AC	DJ	N	C	Fusing lower mylar	定着下マイラー
	(Unit)						
⚠	DUNTW7189DSZZ	CG	UM	N	E	Fusing unit(Include Block 24) (100V Series)	定着ユニット(ブロック24含む)
⚠ 901	DUNTW7189DS11	CG	UM	N	E	Fusing unit(Include Block 24) (120V Series)	定着ユニット(ブロック24含む)
⚠	DUNTW7189DS12	CG	UM	N	E	Fusing unit(Include Block 24) (200V Series)	定着ユニット(ブロック24含む)

26 定着駆動ユニット(Fusing drive unit)

NO.	PARTS CODE	PRICE RANK Ex.	PRICE RANK Ja.	NEW MARK	PART RANK	DESCRIPTION	
1	CPLTM5999FC01	AL	EB	N	C	Motor fixing plate	モータ取付けプレート
2	XHBSE40P08000	AA	DD		C	Screw(4×8)	ビス
3	RMOTS0884FCZZ	BA	FX	N	B	Fusing motor	定着モータ
4	XHBSD30P06000	AA	DD		C	Screw(3×6)	ビス
5	MSPRT3063FCZZ	AC	DJ	N	C	Drive joint spring	駆動連結スプリング
6	NGERH1305FCZZ	AK	DX		B	Gear(H59/25T)	ギヤ
7	XRESP70-08000	AA	DD		C	E type ring	E-リング
8	CPLTM6000FC01	AK	EB	N	C	Drive joint plate	駆動連結プレート
9	NGERH1509FCZZ	AE	DJ	N	A	Gear(35T)	ギヤ
10	PCLR-0477FCZZ	AE	DJ	N	C	HR collar	HR カラ-
11	PRNGP0077FCZZ	AA	DD		C	Ring(E7)	リング

25 定着ﾕﾆｯﾄ 2(Fusing unit 2)

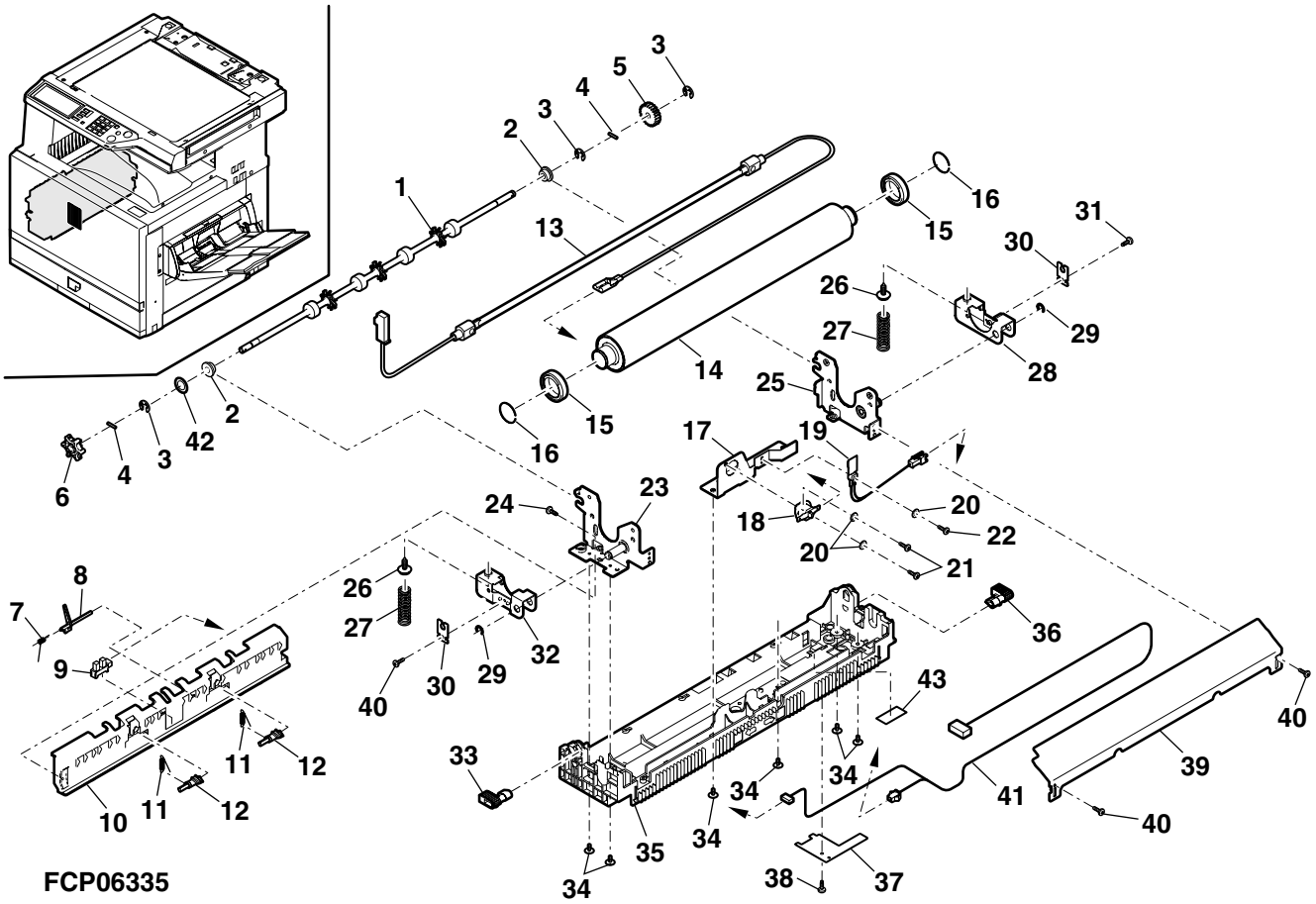

26 定着駆動ﾕﾆｯﾄ (Fusing drive unit)

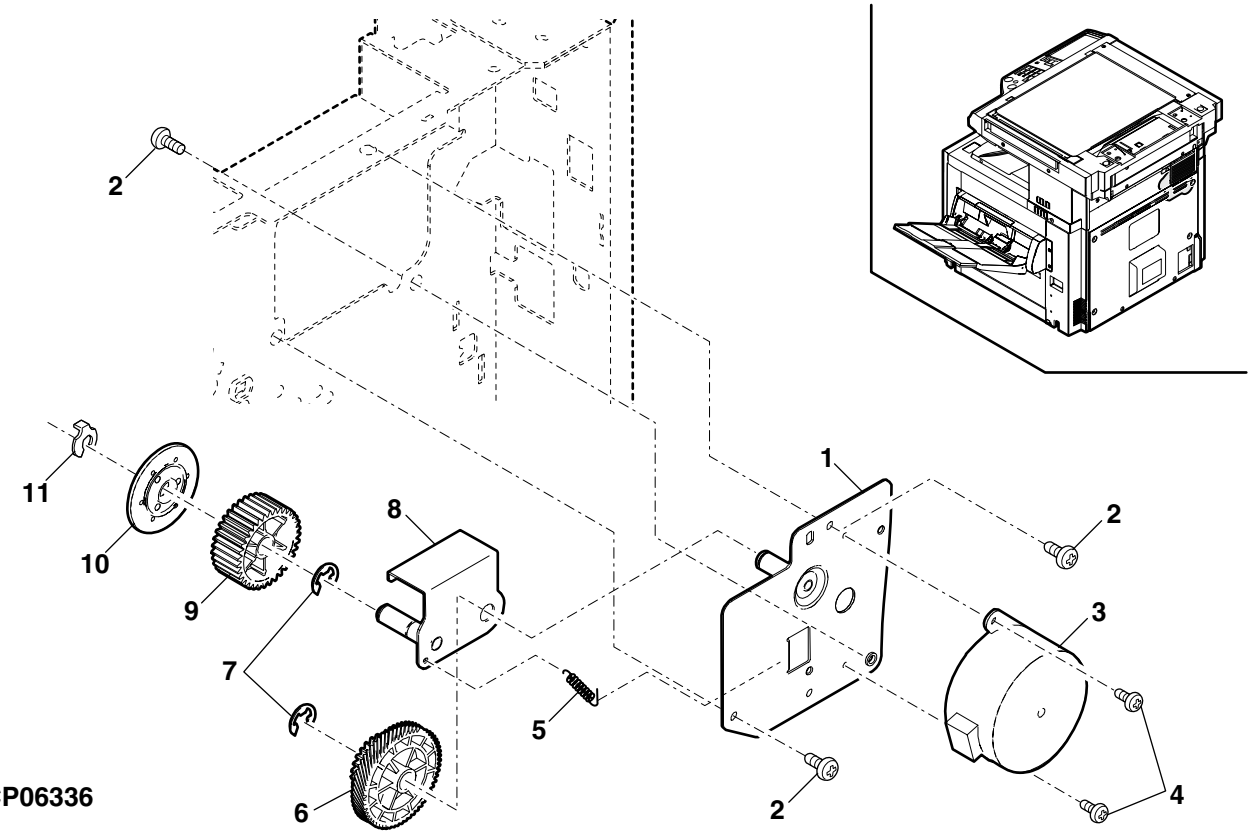

27 左ﾄﾞｱ (Left door)

NO.	PARTS CODE	PRICE RANK Ex.	PRICE RANK Ja.	NEW MARK	PART RANK	DESCRIPTION	
1	MLEVP0863FCZZ	AE	EB	N	C	Full actuator FU	満杯ｱｸﾁｭｴｰﾀ FU
2	PGiDM1970FCZZ	BB	EQ	N	C	Delivery guide upper	排紙ｶﾞｲﾄﾞ上
3	XHBSE40P08000	AA	DD		C	Screw(4×8)	ﾋﾞｽ
4	MSPRP3056FCZZ	AF	DS	N	C	Delivery roller spring	排紙ｺﾛ板ﾊﾞﾈ
5	PCLR-0475FCZZ	AA	DJ	N	C	Delivery collar	排紙ｺﾛ
6	XRESP70-08000	AA	DD		C	E type ring	E-ﾘﾝｸﾞ
7	LX-WZ0042FCZ1	AA	DD		C	Washer	ﾋﾗﾜｯｼｬｰ
8	MSPRC2654FCZ1	AB	DJ		C	Separator pressure spring	離接加圧ｽﾌﾟﾘﾝｸﾞ
9	CSTYM0294FC01	AS	EQ	N	C	Delivery stay	排紙ｽﾃｰ
10	JKNBZ0144FCZZ	AE	DS	N	C	Roller knob	ﾀﾞｲﾛｰﾗｰﾉﾌﾞ
11	LX-BZ0944FCZ1	AH	DS	N	C	Screw	ﾋﾞｽ
12	MSLi-0140FCZZ	BA	FX	N	C	Slide rail	ｽﾗｲﾄﾞﾚｰﾙ
13	LFRM-1079FCZZ	AF	DS	N	C	Transfer slide FU	転写ｽﾗｲﾄﾞ FU
14	LFRM-1080FCZZ	AH	DX	N	C	Transfer slide PU	転写ｽﾗｲﾄﾞ PU
15	LSTYM0298FCZZ	AH	DX	N	C	Delivery stay lower	排紙ｽﾃｰ下
16	MLEVP0781FCZZ	AD	DJ		C	Left door release lever	左ﾄﾞｱ解除ﾚﾊﾞｰ
17	PTME-0290FCZZ	AD	DJ	N	C	Delivery lock pawl	排紙ﾛｯｸ爪
18	XRESP50-06000	AA	DD		C	E type ring	E-ﾘﾝｸﾞ
19	MSPRD3102FCZZ	AC	DJ	N	C	Lock spring F	ﾛｯｸｽﾌﾟﾘﾝｸﾞ F
20	NSFTZ2697FCZZ	AN	EQ	N	C	Delivery lock shaft	排紙ﾛｯｸｼｬﾌﾄ
21	MSPRD3103FCZZ	AD	DJ	N	C	Lock spring R	ﾛｯｸｽﾌﾟﾘﾝｸﾞ R
22	LFRM-1073FCZ1	AS	EG	N	C	Delivery frame F	排紙ﾌﾚｰﾑ F
23	LFRM-1074FCZZ	AS	EQ	N	C	Delivery frame R	排紙ﾌﾚｰﾑ R
24	PGiDM1969FCZZ	AN	FQ	N	B	Reverse gate	反転ｹﾞｰﾄ
25	MSPRD3163FCZZ	AC	DJ	N	C	Gate earth spring	ｹﾞｰﾄｱｰｽｽﾌﾟﾘﾝｸﾞ
26	MARMP0298FCZZ	AC	DJ	N	C	Reverse gate arm	反転ｹﾞｰﾄｱｰﾑ
27	LSTYM0301FCZZ	AF	DS	N	C	Delivery stay upper	排紙ｽﾃｰ上
28	GCAB-0981FCZ5	AZ	FX	N	D	FU delivery cabinet (100V Series)	FU 排紙ｷｬﾋﾞ
	GCAB-0981FCZZ	BB	GD	N	D	FU delivery cabinet (200V Series)	FU 排紙ｷｬﾋﾞ
29	PCOVP1656FCZZ	AG	DX	N	D	FU delivery enter cover	FU 排紙口ｶﾊﾞｰF
30	PBRSR0219FCZ1	AG	DX	N	B	Discharge brush	除電ﾌﾞﾗｼ
31	XEBSD40P08000	AA	DD		C	Screw(4×8)	ﾋﾞｽ
32	LPiNS0096FCZZ	AB	DD		C	Pin(φ3-12)	ﾋﾟﾝ
33	PSHEZ5074FCZZ	AC	DJ	N	C	Delivery edge protect sheet	排紙ｴｯｼﾞ保護ｼｰﾄ
34	LPiNS0327FCZZ	AC	DJ		C	Pin(φ2-10)	ﾋﾟﾝ
35	LPiNS0320FCZZ	AB	DJ		C	Spring pin(φ2-8)	ｽﾌﾟﾘﾝｸﾞﾋﾟﾝ

27 左ﾄﾞｱ (Left door)

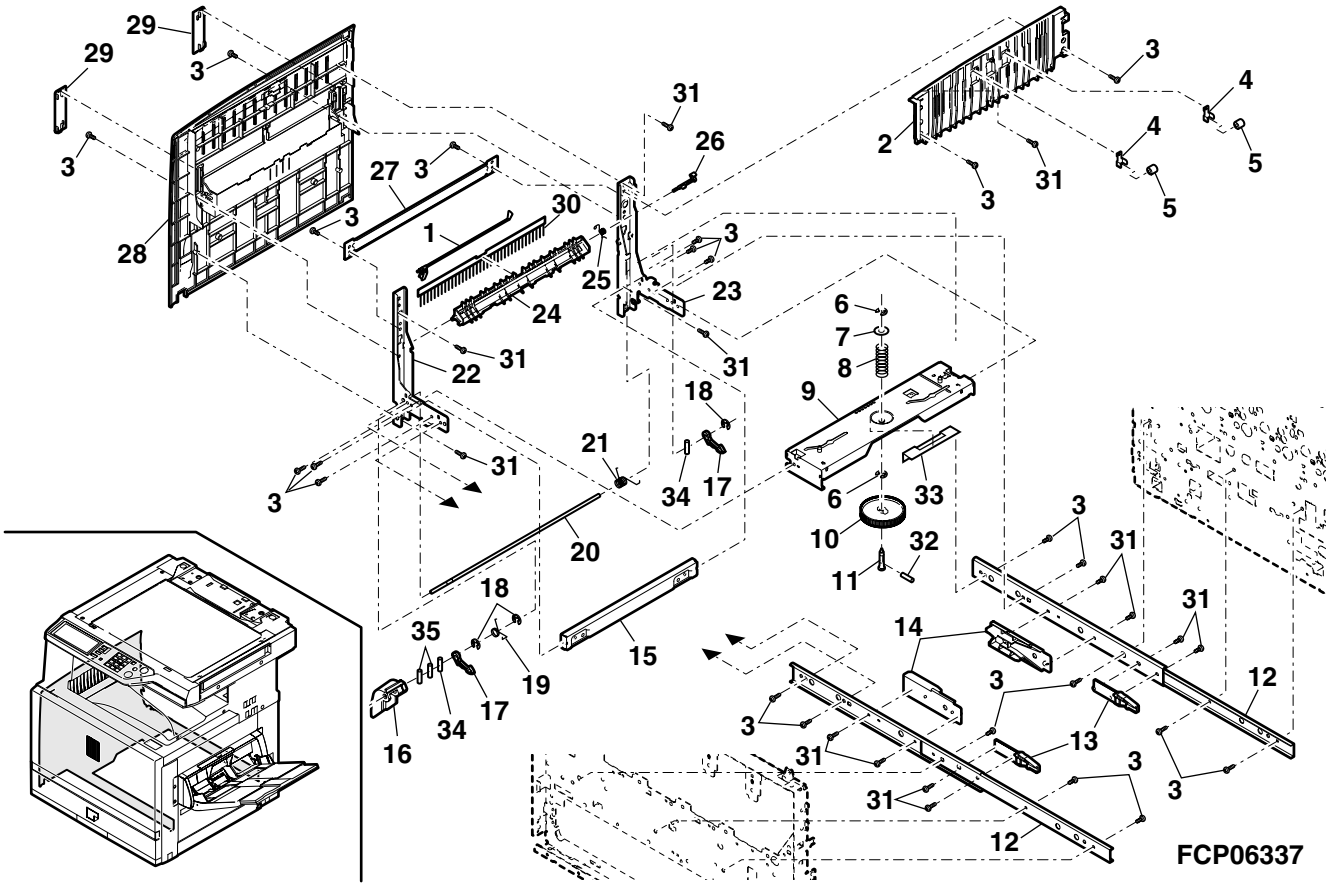

28 FD 排紙ﾕﾆｯﾄ (FD delivery unit)

NO.	PARTS CODE	PRICE RANK		NEW MARK	PART RANK	DESCRIPTION	
		Ex.	Ja.				
1	RMOTS0890FCZZ	BA	FX	N	B	Slide motor	ｽﾗｲﾄﾞﾓｰﾀ
2	XHBSD30P06000	AA	DD		C	Screw(3×6)	ﾋﾞｽ
3	CPLTM6017FC01	AG	DX	N	C	Slide motor fixing plate	ｽﾗｲﾄﾞﾓｰﾀ取付けﾅﾌﾟﾚｰﾄ
4	VHPGP1A71L3−1	AG	DS	N	B	Photo sensor(GP1A71L3)	ﾌｫﾄｾﾝｻｰ
5	NGERH1531FCZZ	AD	DJ	N	C	Shifter gear(24/50)	ｼﾌﾀｰｷﾞﾔ
6	XRESP40−06000	AA	DD		C	E type ring	E-ﾘﾝｸﾞ
7	PGiDM1971FCZZ	AY	FQ	N	C	FD delivery guide IN	FD 排紙ｶﾞｲﾄﾞ IN
8	MSPRP3082FCZZ	AF	DS	N	C	FD earth plate spring B	FD ｱｰｽ板 B ｽﾌﾟﾘﾝｸﾞ
9	NPLYZ0402FCZZ	AD	DJ	N	C	Offset pulley(22T)	ｵﾌｾｯﾄﾌﾟｰﾘｰ
10	NBRGC0683FCZZ	AC	DJ	N	C	Bearing	軸受け
11	MSPRP3081FCZZ	AF	DS	N	C	FD earth plate spring A	FD ｱｰｽ板 A ｽﾌﾟﾘﾝｸﾞ
12	LPLTM6016FCZZ	AC	DJ	N	C	Pulley fulcrum plate	ﾌﾟｰﾘｰ支点ﾌﾟﾚｰﾄ
13	XEBSE30P06000	AA	DD		C	Screw(3×6)	ﾋﾞｽ
14	MLEVP0851FCZZ	AE	DS	N	C	FD enpty actuator	FD 満杯ｱｸﾁｭｴｰﾀ
15	PGiDM1972FCZZ	AY	FQ	N	C	FD delivery PG	FD 排紙ﾍﾟｰﾊﾟｰｶﾞｲﾄﾞ
16	PBRSR0218FCZ1	AH	DX	N	B	FD discharge brush	FD 除電ﾌﾞﾗｼ
17	NROLP1432FCZZ	AE	DJ	N	C	Belt support lever roller	FD 排紙従動ﾛｰﾗ
18	MSPRT3064FCZZ	AD	DJ	N	C	FD drive belt roller spring	FD 排紙ｺﾛｽﾌﾟﾘﾝｸﾞ
19	XRESP50−06000	AA	DD		C	E type ring	E-ﾘﾝｸﾞ
20	NBRGC0188FCZZ	AB	DD		C	Bearing	軸受け
21	LPiNS0258FCZZ	AA	DD		C	Spring pin(φ3-10)	ｽﾌﾟﾘﾝｸﾞﾋﾟﾝ
22	NROLR1398FCZ1	AR	EQ	N	C	FD delivery roller A	FD 排紙ﾛｰﾗ A
23	PRNGP0077FCZZ	AA	DD		C	Ring(E7)	ﾘﾝｸﾞ
24	NGERH0484FCZZ	AB	DD		C	Gear(46T)	ｷﾞﾔ
25	NBLTH0374FCZZ	AE	DJ	N	C	FD delivery belt	FD 排紙ﾍﾞﾙﾄ
26	NGERH0866FCZZ	AC	DD		C	Gear(22T)	ｷﾞﾔ
27	NPLYZ0146FCZZ	AB	DD		C	Pulley(22MXL)	ﾌﾟｰﾘｰ
28	LPiNS0165FCZZ	AB	DD		C	Pin(φ2-8)	ﾍｲｺｳﾋﾟﾝ
29	NROLR1399FCZ1	AR	EQ	N	C	FD delivery roller B	FD 排紙ﾛｰﾗ B
30	NSFTZ2713FCZZ	AK	DX	N	C	FD slide shaft	FD ｽﾗｲﾄﾞｼｬﾌﾄ
31	PGiDM2007FCZZ	AP	EQ	N	C	FD delivery guide OUT	FD 排紙ｶﾞｲﾄﾞ OUT
32	LPLTM6073FCZZ	AC	DJ	N	C	FD fusing presure plate	FD 定着圧接ﾌﾟﾚｰﾄ
33	MLEVP0850FCZZ	AG	DX	N	C	FD delivery actuator	FD 排紙ｱｸﾁｭｴｰﾀ
34	MSPRT3110FCZ1	AC	DJ	N	C	FD Delivery actuator spring	FD 排紙ｱｸﾁｭｴｰﾀｽﾌﾟﾘﾝｸﾞ
35	XEBSE40P08000	AA	DD		C	Screw(4×8)	ﾋﾞｽ
36	PCLR−0479FCZZ	AC	DJ	N	C	FD slide collar	FD ｽﾗｲﾄﾞｶﾗｰ
37	LX−BZ0840FCZZ	AC	DD		C	Screw	ﾗｯｸ固定ﾋﾞｽ
38	XHBSE40P08000	AA	DD		C	Screw(4×8)	ﾋﾞｽ
39	XEBSD30P08000	AA	DD		C	Screw(3×8)	ﾋﾞｽ
40	VHPGP1A71L3−1	AG	DS	N	B	Photo sensor(GP1A71L3)	ﾌｫﾄｾﾝｻｰ
	(Unit)						
901	DUNT−7193DSZZ	BG	GX	N	E	FD delivery unit(Without No.1,2,3,5,6,38,39,40) FD 排紙ﾕﾆｯﾄ (No.1,2,3,5,6,38,39,40 除く)	

28 FD 排紙ﾕﾆｯﾄ (FD delivery unit)

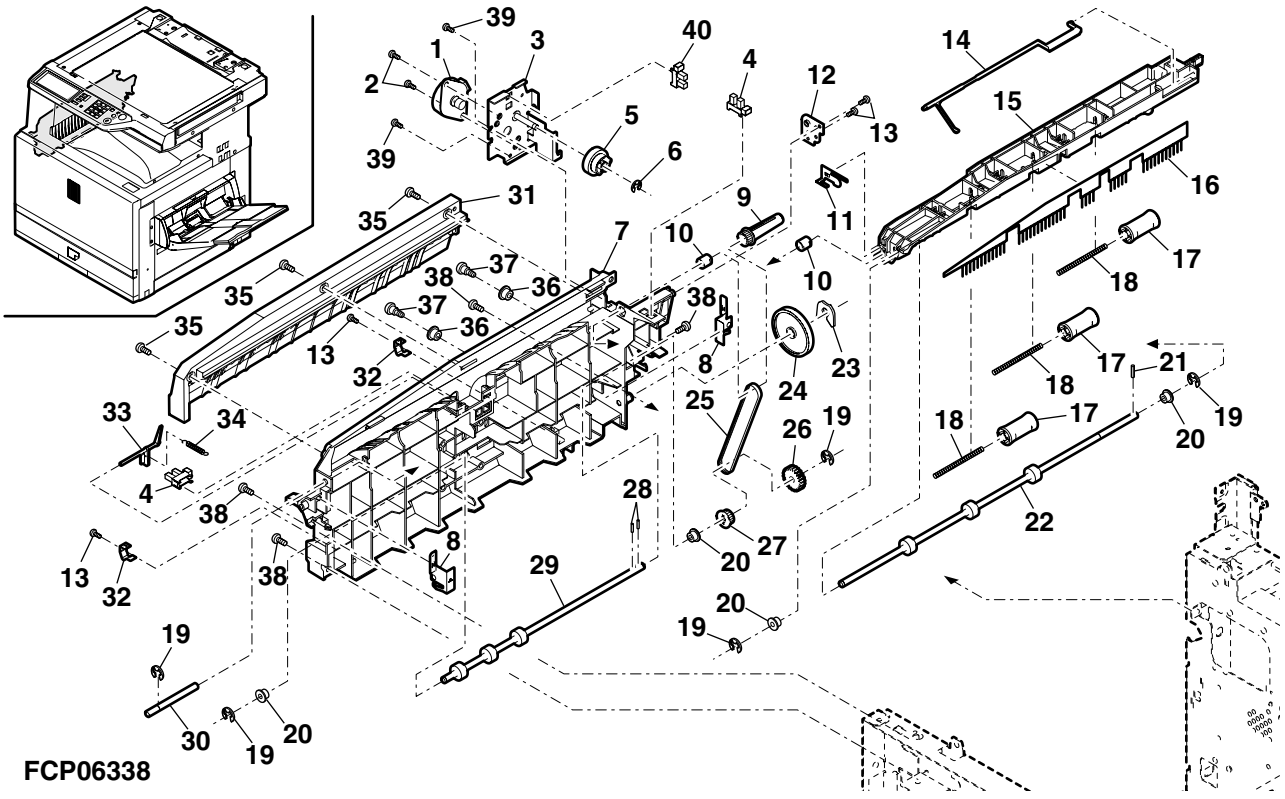

29 ﾌﾚｰﾑ 1(Frame 1)

NO.	PARTS CODE	PRICE RANK		NEW MARK	PART RANK	DESCRIPTION	
		Ex.	Ja.				
1	PCAPH0082FCZZ	AD	DJ	N	B	handle cap	ﾊﾝﾄﾞﾙｷｬｯﾌﾟ
2	JHNDM0163FCZ1	AG	DX	N	C	Handdle N	ﾊﾝﾄﾞﾙ N
3	XEBSE30P06000	AA	DD		C	Screw(3×6)	ﾋﾞｽ
4	LPLTM6100FCZZ	AM	EG	N	C	Joint support plate	連結補強ﾌﾟﾚｰﾄ
5	LPLTM6093FCZZ	AM	EG	N	C	Rear exterior fixing plate	後ｷｬﾋﾞ取付けﾌﾟﾚｰﾄ
6	LANGF1422FCZZ	AG	DS	N	C	Rear angle L	後端ｱﾝｸﾞﾙ L
7	LANGF1421FCZZ	AF	DS	N	C	Rear angle R	後端ｱﾝｸﾞﾙ R
8	LPLTM6097FCZZ	AD	DJ	N	C	MF fixing plate F	手差し取付け板 F
14	PCOVP1634FCZZ	AF	DS	N	C	MFP cover B	MFP ｶﾊﾞｰ B
15	XHBSE40P08000	AA	DD		C	Screw(4×8)	ﾋﾞｽ
16	CPLTM5974FC01	AH	DX	N	C	Process guide plate K	ﾌﾟﾛｾｽｶﾞｲﾄﾞﾌﾟﾚｰﾄ K
17	CPLTM5975FC01	AL	EB	N	C	Process guide plate C	ﾌﾟﾛｾｶﾞｲﾄﾞｽﾌﾟﾚｰﾄ C
18	XHBSE30P08000	AA	DD		C	Screw(3×8)	ﾋﾞｽ
19	LRALM0202FCZZ	AN	EG	N	C	Caseette rail L	ｶｾｯﾄﾚｰﾙ左
20	XHBSD40P06000	AA	DD		C	Screw(4×6)	ﾋﾞｽ
21	MSPRP3164FCZZ	AD	DJ	N	C	Earth spring	ｱｰｽｽﾌﾟﾘﾝｸﾞ
22	LHLDZ1546FCZZ	AC	DJ	N	C	Lock switch protect holder	ﾛｯｸｽｲｯﾁ保護ﾎﾙﾀﾞｰ
23	XEBSD30P08000	AA	DD		C	Screw(3×8)	ﾋﾞｽ

29 ﾌﾚｰﾑ 1(Frame 1)

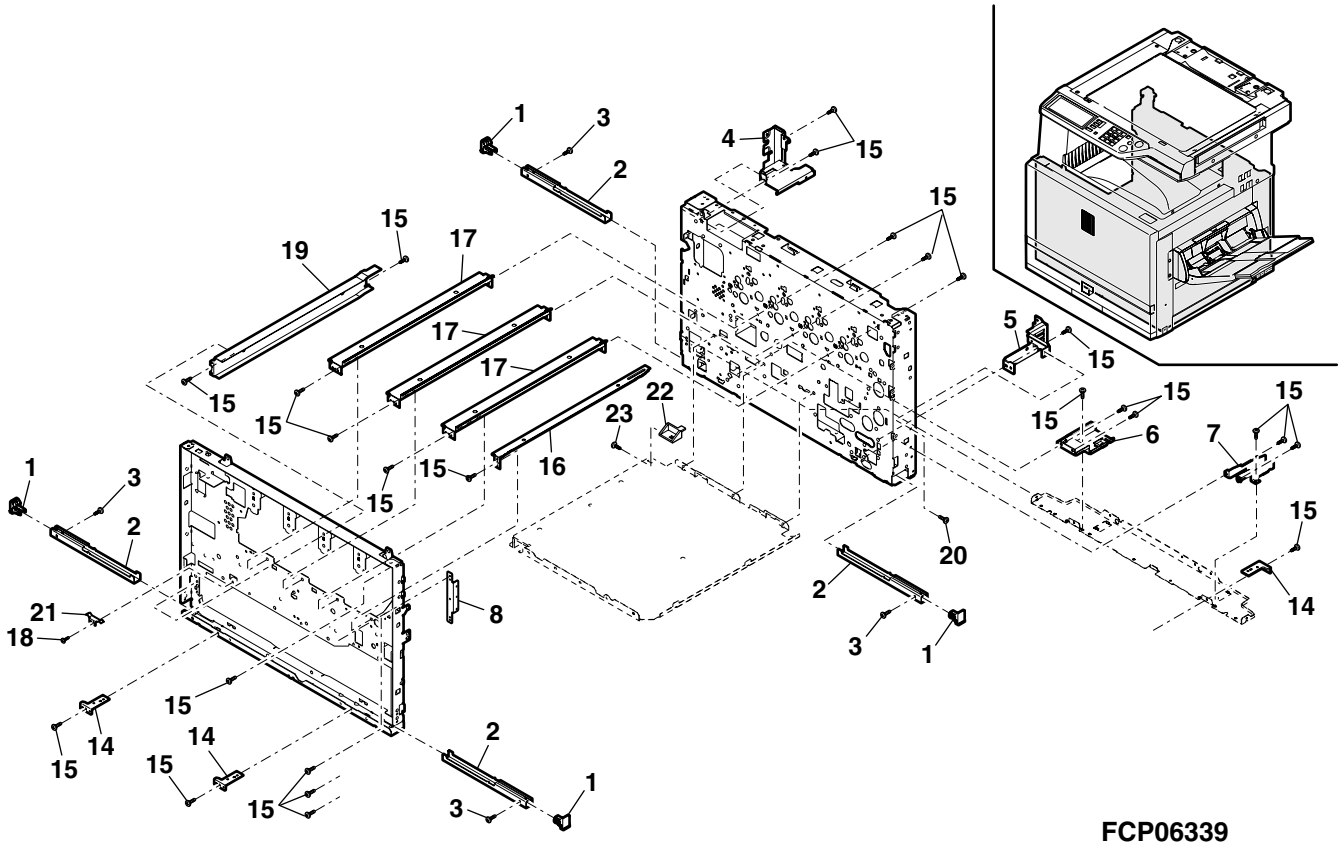

30 ﾌﾚｰﾑ 2(Frame 2)

NO.	PARTS CODE	PRICE RANK		NEW MARK	PART RANK	DESCRIPTION	
		Ex.	Ja.				
1	QSW-C1390QCZZ	AN	EQ		B	Power switch(LLN35C1)	電源ｽｲｯﾁ
2	XHBSD30P14000	AA	DD		C	Screw(3×14)	ﾋﾞｽ
3	QSW-M0502FCZZ	AH	DX		B	Door switch(AM51632C531)	ﾄﾞｱｽｲｯﾁ
4	LHLDW1152FCZZ	AC	DJ		C	Bushing(EH-14)	ﾌﾞｯｼｭ
5	NGERH1530FCZ1	AK	EB	N	C	DV drive gear(21T)	現像駆動ｷﾞﾔ
6	LX-BZ0071FCZZ	AA	DD		C	Screw	ﾋﾞｽ
7	TCAUH1035FCZZ	AC	DJ		C	HT caution label (Japan only)	ｺｳｵﾝﾁｭｳｲﾗﾍﾞﾙ
8	PCOVP1654FCZZ	AM	EG		C	T heater cover (Japan only)	Tﾋｰﾀｰｶﾊﾞｰ
9	LX-BZ0959FCZZ	AC	DD	N	C	Screw	ﾋﾞｽ
10	LPLTM6089FCZZ	AK	DX	N	C	Heater fixing plate (Japan only)	ﾋｰﾀｰﾄﾘﾂﾂｹﾊﾞﾝ
11	RHETP0084FCZZ	AS	EQ		C	Dehumidify heater (Japan only)	除湿ﾋｰﾀｰ
12	PGIDM1992FCZZ	AD	DJ	N	C	PS insert guide R	PS 挿入ｶﾞｲﾄR
13	PGIDM1991FCZZ	AE	DJ	N	C	PS insert guide F	PS 挿入ｶﾞｲﾄF
14	GLEGG0075FCZZ	AE	DJ		C	Rubber foot	ｺﾞﾑｱｼ
15	LX-BZ0898FCZZ	AC	DD		C	Screw	ﾋﾞｽ
16	LBOSZ2114FCZZ	AK	EB	N	C	Process fulcrum boss	ﾌﾟﾛｾｽ位置決めﾎﾞｽ
17	LX-BZ0855FCZZ	AC	DD		C	Screw	ﾋﾞｽ
18	XHBSD30P06000	AA	DD		C	Screw(3×6) (Japan only)	ﾋﾞｽ
19	XHBSE30P08000	AA	DD		C	Screw(3×8) (Japan only)	ﾋﾞｽ
20	NSFTZ2685FCZ1	AL	EB	N	C	DV gear shaft	現像ｷﾞﾔｼｬﾌﾄ
21	XWHSD40-08100	AA	DD		C	Washer	ﾋﾗ ﾜｯｼｬ
22	XHBSE40P08000	AA	DD		C	Screw(4×8)	ﾋﾞｽ
23	PCOVP1660FCZZ	AM	EG	N	C	Caseette cover R	ｶｾｯﾄｶﾊﾞｰR
24	PCLR-0441FCZZ	AK	DX		C	collar	ｺﾛ
25	LX-BZ0960FCZZ	AC	DD		C	Screw	ﾋﾞｽ
26	PCOVP1659FCZZ	AK	DX	N	C	Caseette cover L	ｶｾｯﾄｶﾊﾞｰL
27	XBBSD30P08000	AA	DD		C	Screw(3×8)	ﾋﾞｽ
28	DUNT-7272DSZZ	CU	VZ	N	E	LED exposure unit	LED 露光ﾕﾆｯﾄ
30	PCOVP1700FCZZ	AG	DX	N	C	Connector cover	ｺﾈｸﾀｶﾊﾞｰ
31	XEBSD40P08000	AA	DD		C	Screw(4×8)	ﾋﾞｽ

30 ﾌﾚｰﾑ 2(Frame 2)

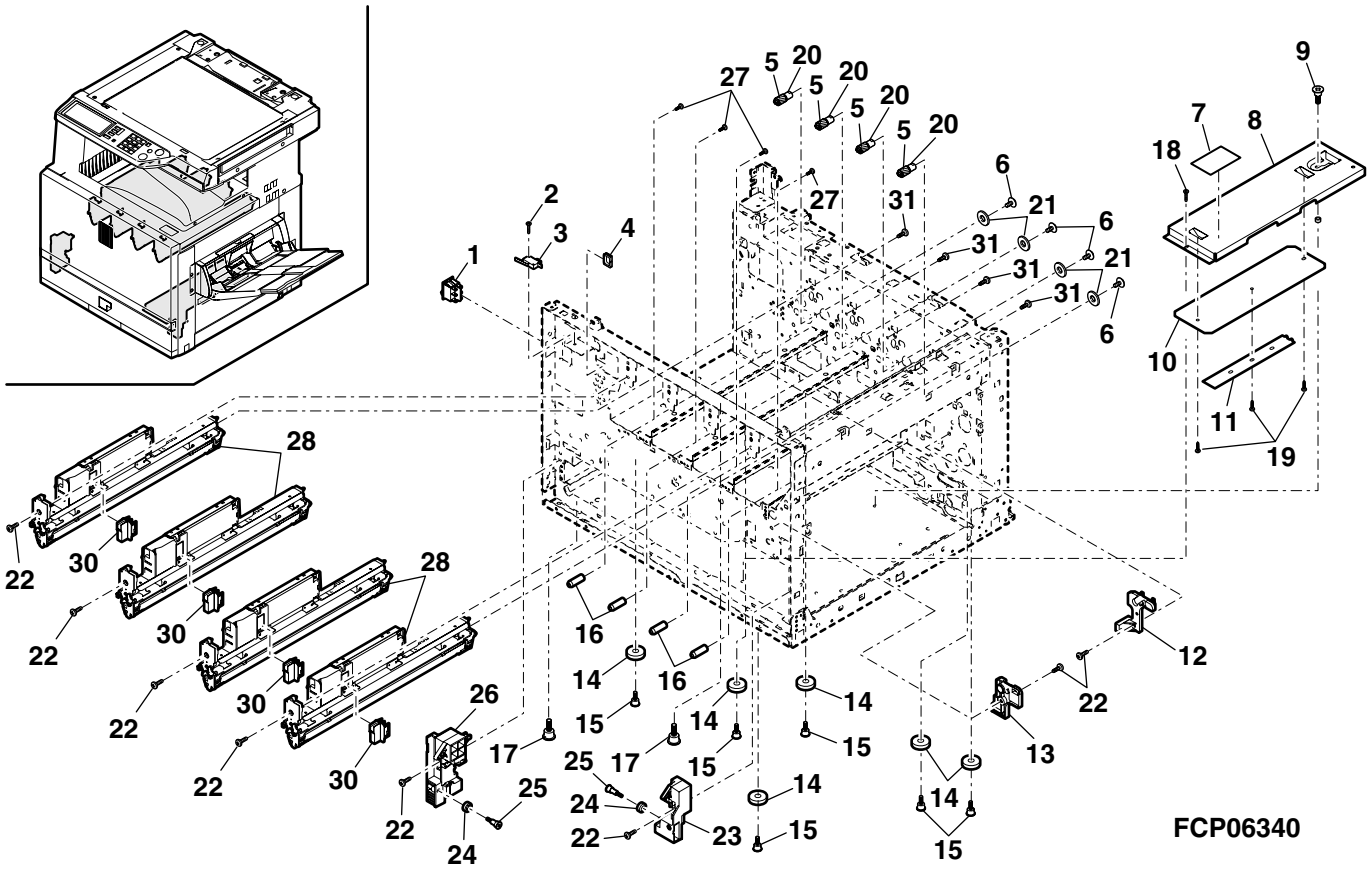

31 ﾌﾚｰﾑ 3(Frame 3)

NO.	PARTS CODE	PRICE RANK Ex.	PRICE RANK Ja.	NEW MARK	PART RANK	DESCRIPTION	
1	QSW-M0502FCZZ	AH	DX		B	Door switch(AM51632C531)	ﾄﾞｱｽｲｯﾁ
2	LDAiU0643FCZZ	AH	DX	N	C	Position block R	位置決めﾌﾞﾛｯｸ R
3	XEBSD30P16000	AA	DD		C	Screw(3×16)	ﾋﾞｽ
4	LHLDZ1525FCZZ	AG	DJ	N	C	Full detector holder	満杯検知ﾎﾙﾀｰ
5	LSUPP0126FCZZ	AC	DJ	N	C	Supporter(SPLSN-4)	ｻﾎﾟｰﾀｰ
⚠	CPWBF1546FCE1	BB	GD	N	E	AC power supply PWB (Japan only)	AC 電源基板
⚠ 6	CPWBF1546FCE2	BA	FX	N	E	AC power supply PWB (Except Japan)[100V series]	AC 電源基板
⚠	CPWBF1546FCE4	BA	FX	N	E	AC power supply PWB (Except Japan)[200V series]	AC 電源基板
7	LPLTM6027FCZZ	AH	DX	N	C	Driver PWB fixing plate	ﾄﾞﾗｲﾊﾞ基板取付けﾌﾟﾚｰﾄ
8	CPWBN1545FCE1	BQ	LP	N	E	Driver PWB	ﾄﾞﾗｲﾊﾞｰ基板
9	XHBSE30P08000	AA	DD		C	Screw(3×8)	ﾋﾞｽ
15	CPLTM6024DS51	AU	EZ	N	E	Gate solenoid unit	ｹﾞｰﾄｿﾚﾉｲﾄﾞﾕﾆｯﾄ
17	DHAi-3362FCZZ	AY	FQ	N	C	AC control harness	AC ｺﾝﾄﾛｰﾙﾊｰﾈｽ
18	XHBSE30P06000	AA	DD		C	Screw(3×6)	ﾋﾞｽ
19	XHBSE40P08000	AA	DD		C	Screw(4×8)	ﾋﾞｽ
20	LPLTM6079FCZZ	AD	DJ	N	C	Dask connector fixing plate	ﾃﾞｽｸｺﾈｸﾀ取付けﾌﾟﾚｰﾄ
21	LPLTM5980FCZZ	AK	EB	N	C	Inlet fixing plate	ｲﾝﾚｯﾄ取付けﾌﾟﾚｰﾄ
22	LHLDW1151FCZZ	AB	DJ		C	Wire saddle(WWS-2)	ﾜｲﾔｰｻﾄﾞﾙ
23	LHLDW1152FCZZ	AC	DJ		C	Bushing(EH-14)	ﾌﾞｯｼｭ
24	DUNT-7289DSZZ	AK	DX	N	E	Inlet unit	ｲﾝﾚｯﾄﾕﾆｯﾄ
25	XBPSD40P08K00	AA	DD		C	Screw(4×8K)	ﾋﾞｽ
26	VHi28F081L07F	AY	FQ	N	E	PCU FLASH ROM(28F081L07F)	PCU ﾌﾗｯｼｭﾛﾑ
27	DHAi-3412FCZZ	AC	DJ	N	C	DM drive earth harness	DM 駆動ｱｰｽﾊｰﾈｽ
28	CPWBN1544DS51	BR	LX	N	E	PCU PWB	PCU 基板
29	LPLTM5981FCZZ	AK	DX	N	C	Driver PWB fixing plate	ﾄﾞﾗｲﾊﾞ基板取付けﾌﾟﾚｰﾄ
30	XBPSD30P08K00	AA	DD		C	Screw(3×8K)	ﾋﾞｽ
⚠ 31	RDENC0020FCZ1	BU	NE	N	E	AC/DC power supply PWB (100V Series)	AC/DC 電源基板
⚠	RDENC0021FCZZ	BW	RJ	N	E	AC/DC power supply PWB (200V Series)	AC/DC 電源基板
32	VHPGP1A71L3-1	AG	DS	N	B	Photo sensor(GP1A71L3)	ﾌｫﾄｾﾝｻｰ
33	LPLTM5979FCZZ	AV	FG	N	C	Power supply fixing plate	電源取付けﾌﾟﾚｰﾄ
34	LHLDW1154FCZZ	AC	DJ		C	Wire holder(LWS5S2W)	ﾎﾙﾀﾞｰ
35	LSUPP0126FCZZ	AC	DJ	N	C	Supporter(SPLSN-4)	ｻﾎﾟｰﾀｰ
36	XHBSE30P08000	AA	DD		C	Screw(3×8)	ﾋﾞｽ
⚠ 37	RDENC0013FCZZ	BK	HG	N	E	High voltage TC power supply PWB	ｺｳｱﾂ TC 電源基板
38	QCNW-0190FCZZ	AD	DJ	N	C	MC-TC FFC	MC-TC FFC
⚠ 39	RDENC0012FCZZ	BR	LX	N	E	High voltage MC power supply PWB	ｺｳｱﾂ MC 電源基板
40	CDAiU0577FC31	BE	GN		E	Lift-up unit	ﾘﾌﾄｱｯﾌﾟﾕﾆｯﾄ
42	NFANP0072FCZZ	BA	FX	N	B	Process exhaust fan	ﾌﾟﾛｾｽ排気ﾌｧﾝ
43	XEPSD40P40000	AC	DD	N	C	Screw(4×40)	ﾋﾞｽ
44	PDUC-0169FCZ1	AE	DS	N	C	Inhalation of air duct fan fixing plate	吸気ﾀﾞｸﾄﾌｧﾝ取付け板
45	LPLTM6102FCZ1	AN	EG	N	C	Inhalation of air duct fixing plate	吸気ﾀﾞｸﾄ取付けﾌﾟﾚｰﾄ
46	MSPRD3125FCZZ	AD	DJ	N	C	PSM spring	PSM ｽﾌﾟﾘﾝｸﾞ
47	LX-BZ0833FCZZ	AC	DD		C	Screw	ﾋﾞｽ
48	QSW-C9294QCZZ	AF	DS		B	Dry heater switch(ALP SDDJE1) (Japan only)	除湿ﾋｰﾀｰｽｲｯﾁ
49	XEBSD30P08000	AA	DD		C	Screw(3×8)	ﾋﾞｽ
50	LX-LZ0022FCZZ	AB	DD		C	Rivet(KGPS-5RF)	ﾘﾍﾞｯﾄ
51	LX-WZ0443FCZZ	AB	DD		C	Washer	ｱｰｽ用ﾋﾗﾜｯｼｬｰ
52	DHAi-3426FCZZ	AQ	EG	N	C	FAX AC harness (AR-C260F/C260FP)	FAX AC ﾊｰﾈｽ
53	LX-WZ0443FCZZ	AB	DD		C	Washer (AR-C260F/C260FP)	ｱｰｽ用ﾋﾗﾜｯｼｬｰ
54	XBPSD40P08K00	AA	DD		C	Screw(4×8K) (AR-C260F/C260FP)	ﾋﾞｽ
55	XHBSD30P08KS0	AB	DD	N	C	Screw(3×8KS)	ﾋﾞｽ
56	RMOTS0883FCZZ	BA	FX	N	B	PS motor	PS ﾓｰﾀ
58	CPWBF1561DS51	AZ	FQ	N	E	Reacter PWB (200V Series)	ﾘｱｸﾀｰ基板

32 転写挿入ｶﾞｲﾄﾞ (Transfer insert guide)

NO.	PARTS CODE	PRICE RANK Ex.	PRICE RANK Ja.	NEW MARK	PART RANK	DESCRIPTION	
1	PGiDM1967FCZZ	AR	EG	N	C	Belt insert guide R	ﾍﾞﾙﾄ挿入ｶﾞｲﾄﾞ R
2	MSPRP3030FCZZ	AD	DJ	N	C	Transfer electrode spring Y	転写接点 Y ｽﾌﾟﾘﾝｸﾞ
3	MSPRP3031FCZZ	AF	DS	N	C	Transfer electrode spring M	転写接点 M ｽﾌﾟﾘﾝｸﾞ
4	MSPRP3033FCZZ	AG	DX	N	C	Transfer electrode spring C	転写接点 C ｽﾌﾟﾘﾝｸﾞ
5	MSPRP3034FCZZ	AG	DX	N	C	Transfer electrode spring K	転写接点 K ｽﾌﾟﾘﾝｸﾞ
6	MSPRD3035FCZZ	AC	DJ	N	C	Transfer electrode spring	転写電極ｽﾌﾟﾘﾝｸﾞ
7	MLEVP0841FCZZ	AG	DX	N	C	Belt support lever	ﾍﾞﾙﾄ保持ﾚﾊﾞｰ
8	LDAiU0639FCZZ	AE	DS	N	C	Belt support block	ﾍﾞﾙﾄ保持ﾌﾞﾛｯｸ
9	MSPRC3029FCZZ	AC	DJ	N	C	Belt support spring	ﾍﾞﾙﾄ保持ｽﾌﾟﾘﾝｸﾞ
10	NROLP1408FCZZ	AD	DJ	N	C	Belt support lever roller	ﾍﾞﾙﾄ補助ﾚﾊﾞｰﾛｰﾗ
11	XEBSD40P08000	AA	DD		C	Screw(4×8)	ﾋﾞｽ
12	PGiDM1966FCZ1	AP	EQ	N	C	Belt insert guide F	ﾍﾞﾙﾄ挿入ｶﾞｲﾄﾞ F
13	MLEVP0840FCZZ	AD	DJ	N	C	Belt protect lever	ﾍﾞﾙﾄﾌﾟﾛﾃｸﾄﾚﾊﾞｰ
14	LPLTM5976FCZZ	AL	DS	N	C	Belt protect plate	ﾍﾞﾙﾄﾌﾟﾛﾃｸﾄﾌﾟﾚｰﾄ
15	MSPRT3032FCZZ	AC	DJ	N	C	Protect plate spring	ﾌﾟﾛﾃｸﾄ板ｽﾌﾟﾘﾝｸﾞ
16	PDUC-0167FCZ2	AK	EB	N	C	Ozone duct A	ｵｿﾞﾝﾀﾞｸﾄ A
17	DHAi-3367FCZZ	AT	EZ	N	C	CRUM harness	CRUM ﾊｰﾈｽ
18	XEBSD30P10000	AA	DD		C	Screw(3×10)	ﾋﾞｽ
19	XEBSD40P08000	AA	DD		C	Screw(4×8)	ﾋﾞｽ

31 ﾌﾚｰﾑ 3(Frame 3)

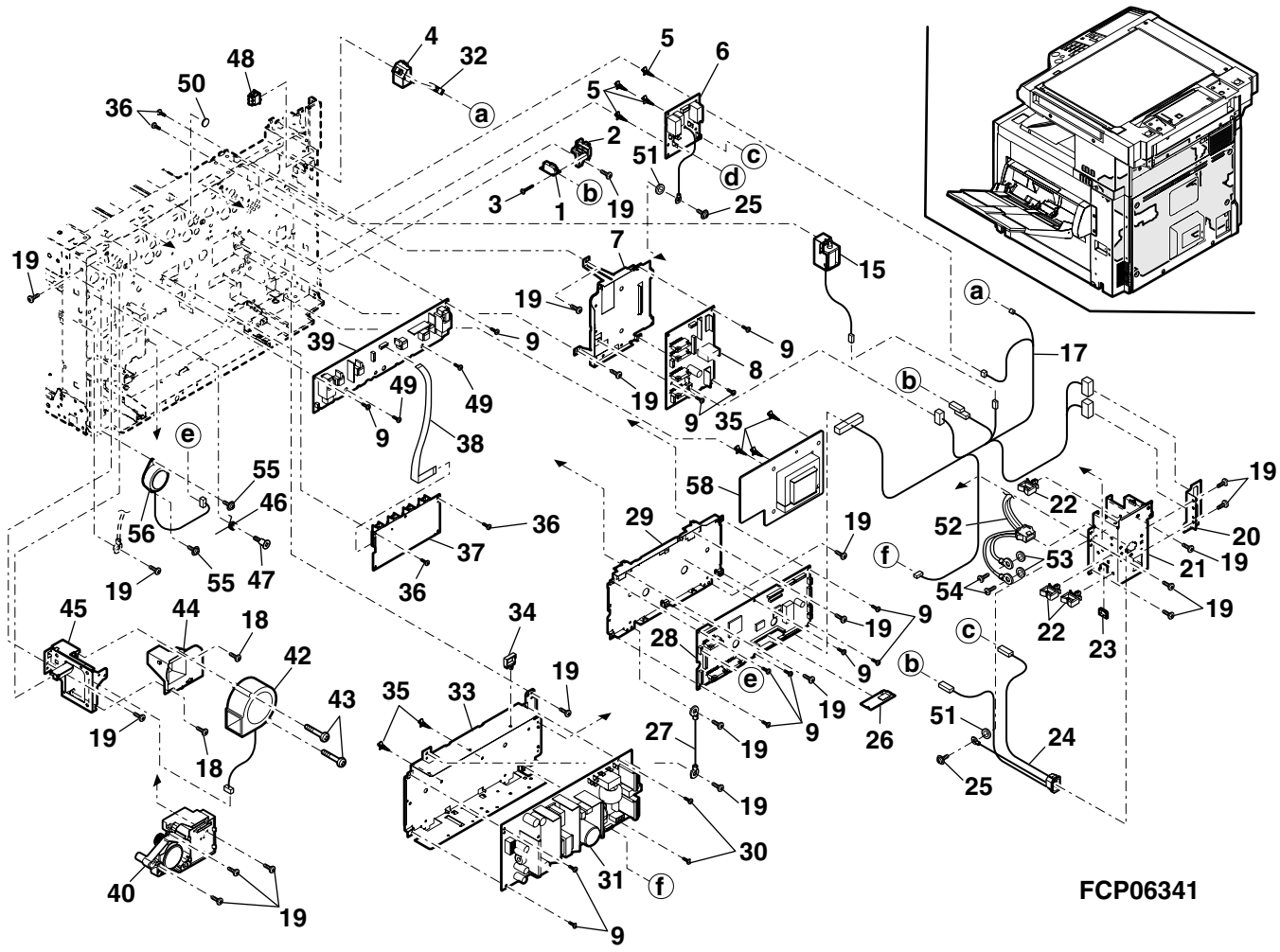

32 転写挿入ｶﾞｲﾄﾞ (Transfer insert guide)

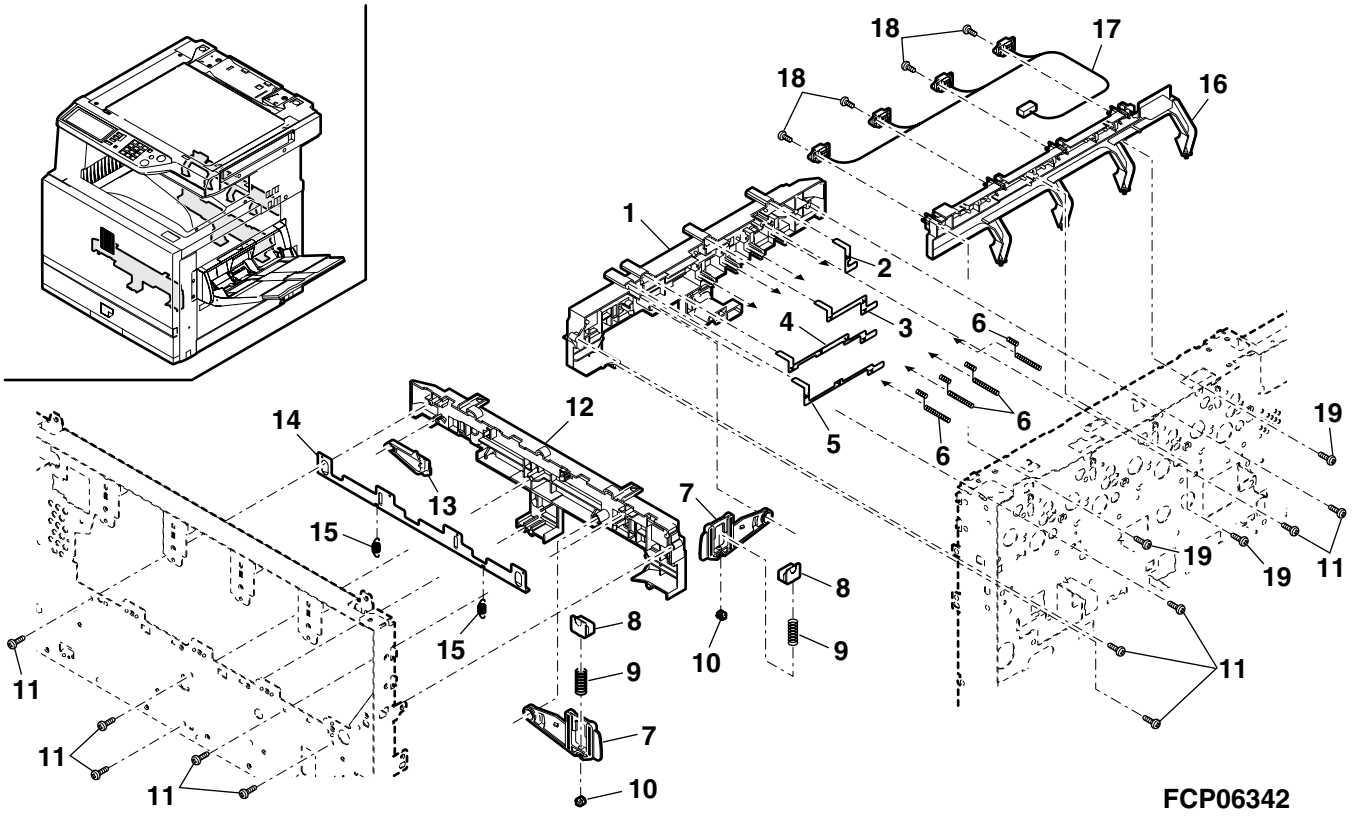

33 ﾀﾞｸﾄﾕﾆｯﾄ (Duct unit)

NO.	PARTS CODE	PRICE RANK		NEW MARK	PART RANK	DESCRIPTION	
		Ex.	Ja.				
1	LHLDZ1508FCZZ	AW	FG	N	C	Ozone filter holder	ｵｿﾞﾝﾌｨﾙﾀｰﾎﾙﾀﾞｰ
2	PFiLZ0290FCZ1	BA	FX	N	A	Ozone filter	ｵｿﾞﾝﾌｨﾙﾀｰ
4	NFANP0068FCZZ	BB	GD	N	B	Cooling fan	冷却ﾌｧﾝ
5	XEBSD40P35000	AC	DD	N	C	Screw(4×35)	ﾋﾞｽ
6	DHAi-3364FCZZ	AX	FG	N	C	HL AC supply harness (100V Series)	HL AC 供給ﾊｰﾈｽ
	DHAi-3402FC11	AY	FQ	N	C	HL AC supply harness (200V Series)	HL AC 供給ﾊｰﾈｽ
7	XBPSD40P06K00	AA	DD		C	Screw(4×6K)	ﾋﾞｽ
8	XHBSE40P08000	AA	DD		C	Screw(4×8)	ﾋﾞｽ
9	MSPRC2645FCZZ	AB	DJ		C	MF reverse pressure spring	手差し逆転加圧ｽﾌﾟﾘﾝｸﾞ
10	LX-BZ0850FCZZ	AC	DD		C	Screw	ﾋﾞｽ
11	LX-WZ0443FCZZ	AB	DD		C	Washer	ｱｰｽ用ﾋﾗﾜｯｼｬｰ
13	XEBSD40P08000	AA	DD		C	Screw(4×8)	ﾋﾞｽ
15	PDUC-0168FCZZ	AK	DX	N	C	Ozone duct B	ｵｿﾞﾝﾀﾞｸﾄB
16	LPLTM5973FCZZ	AQ	EQ	N	C	Fusing separate plate	定着仕切りﾌﾟﾚｰﾄ
17	PDUC-0166FCZZ	AX	EZ	N	C	Fan duct	ﾌｧﾝﾀﾞｸﾄ
20	PSHEP5111FCZZ	AA	DJ	N	C	Process guide sheet	ﾌﾟﾛｾｽｶﾞｲﾄﾞｼｰﾄ

33 ﾀﾞｸﾄﾕﾆｯﾄ (Duct unit)

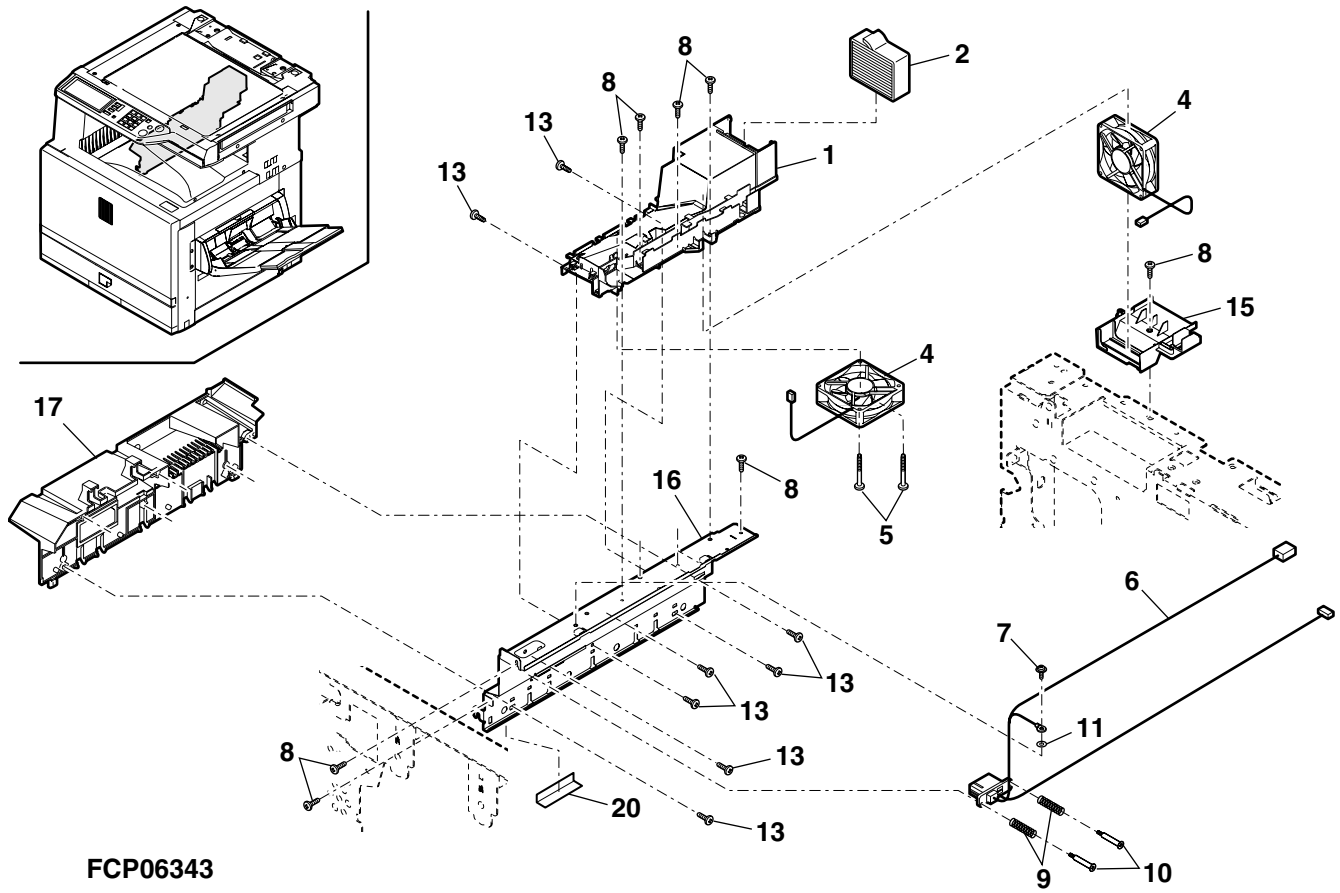

FCP06343

34 ｺﾝﾄﾛｰﾗ BOX(Control box)

NO.	PARTS CODE	PRICE RANK Ex.	PRICE RANK Ja.	NEW MARK	PART RANK	DESCRIPTION		
1	CPWBN1549DS54	CU	VW	N	E	ICU PWB	(AR-C260S/C260M)[JAPAN]	ICU 基板
	CPWBN1549DS55	CV	VZ	N	E	ICU PWB	(AR-C260F/C260FP)[JAPAN]	ICU 基板
	CPWBN1549DS57	CU	VW	N	E	ICU PWB	(AR-C260/C260M)[Except JAPAN]	ICU 基板
2	PCOVP1699FCZ1	AN	EQ	N	C	Box cover R		ﾎﾞｯｸｽｶﾊﾞｰR
3	LPLTM6025FCZZ	AE	DS	N	C	FFC sheild plate		FFC ｼｰﾙﾄﾞﾌﾟﾚｰﾄ
4	PBOX-0131FCZZ	AU	EZ	N	C	Controller BOX		ｺﾝﾄﾛ-ﾗ BOX
5	MSPRP3164FCZZ	AD	DJ	N	C	Earth spring		ｱｰｽｽﾌﾟﾘﾝｸﾞ
6	XHBSE30P06000	AA	DD		C	Screw(3×6)		ﾋﾞｽ
7	PCOVP1697FCZZ	AG	DX	N	C	Box cover F		ﾎﾞｯｸｽｶﾊﾞｰF
9	PHOG-0385FCZZ	AB	DD		C	Harness clamp		ﾊｰﾈｽｸﾗﾝﾌﾟ
10	PCOVP1698FCZZ	AN	EQ	N	C	Box cover C		ﾎﾞｯｸｽｶﾊﾞｰC
11	MSPRP3037FCZZ	AD	DJ	N	C	Controrller spring B		ｺﾝﾄﾛｰﾗｰ接地ｽﾌﾟﾘﾝｸﾞB
12	LSUPP1001ACZZ	AB	DD		C	Supporter(KGPS-4S)		ｽﾍﾟｰｻｰ
13	LPLTM6090FCZZ	AE	DJ	N	C	OP connector fixing plate		OP ｺﾈｸﾀ取付けﾌﾟﾚｰﾄ
14	PGiDH2016FCZZ	AC	DJ	N	C	Controller guide		ｺﾝﾄﾛ-ﾗｶﾞｲﾄﾞ
15	LHLDW1006FCZZ	AA	DD		C	Mini clanp(UAMS-09-0)		ﾐﾆｸﾗﾝﾌﾟ
16	LHLDW0429FCZZ	AB	DD		C	Wire saddle(WS-2NS)		ﾜｲﾔｰｻﾄﾞﾙ
17	QCNW-0215FCZZ	AZ	FQ	N	C	FAX I/F cable	(AR-C260F/C260FP)	FAX I/F ｹｰﾌﾞﾙ
18	MSPRP3036FCZZ	AE	DJ	N	C	FAX harness spring	(AR-C260F/C260FP)	FAX ﾊｰﾈｽ接地ｽﾌﾟﾘﾝｸﾞ
19	XHBSE30P08000	AA	DD		C	Screw(3×8)		ﾋﾞｽ
20	XHBSE30P04000	AA	DD		C	Screw(3×4)		ﾋﾞｽ
21	DHAi-3465FCZZ	AV	FG	N	C	PRTCFM harness	(AR-C260/C260S/C260F)	PRTCFM ﾊｰﾈｽ
22	VHi28F322L23F	BH	HC	N	C	ICU FLASH ROM(28F322L23F)	(AR-C260F/C260FP)	ICU ﾌﾗｯｼｭﾛﾑ
	VHi28F322L22F	BH	HC	N	C	ICU FLASH ROM(28F322L22F)	(Other Model)	ICU ﾌﾗｯｼｭﾛﾑ

34 ｺﾝﾄﾛｰﾗ BOX(Control box)

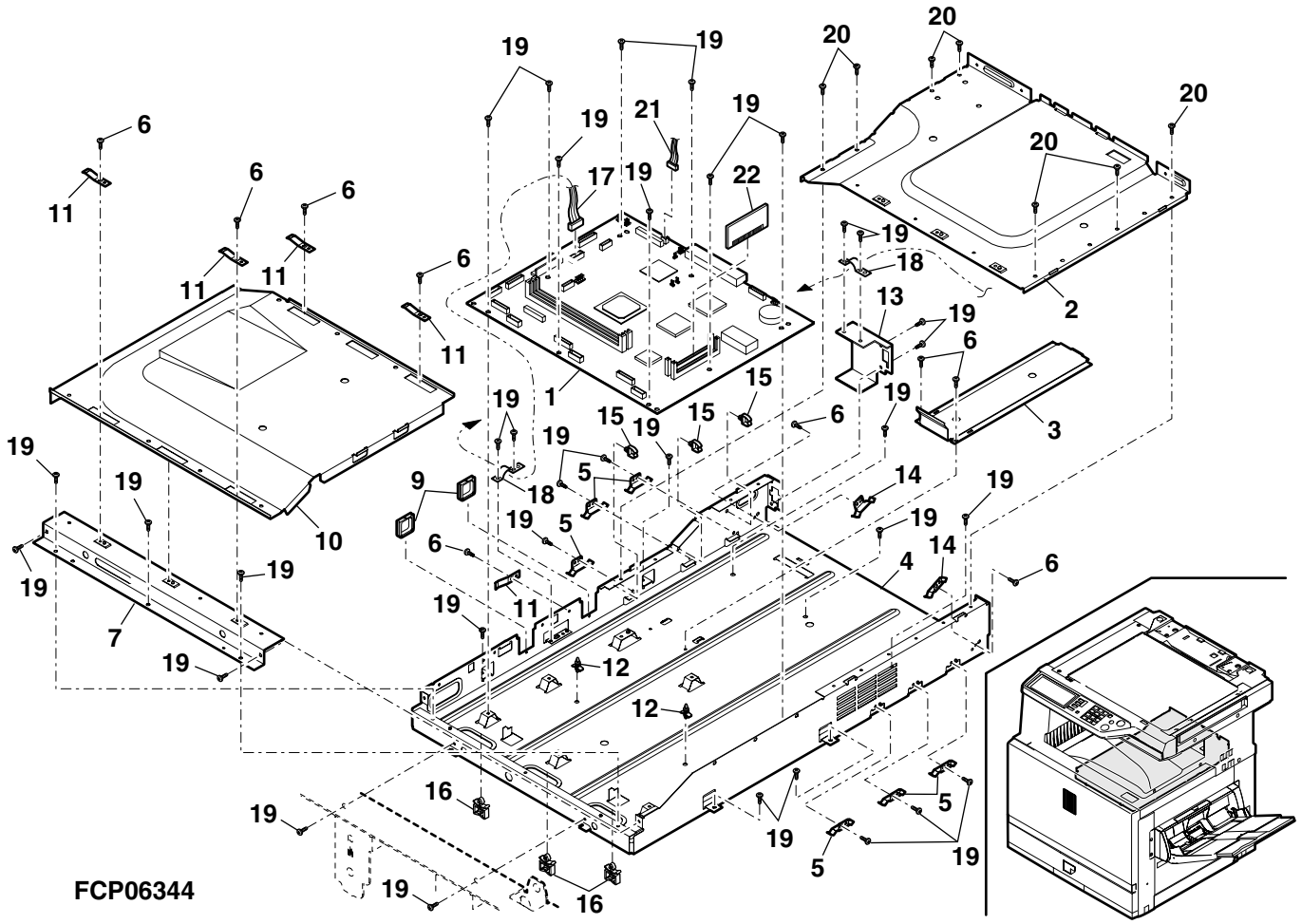

35 配線部 (Wiring section)

NO.	PARTS CODE	PRICE RANK		NEW MARK	PART RANK	DESCRIPTION	
		Ex.	Ja.				
1	DHAi-3424FC12	AV	FG	N	C	LED head harness	LED ﾍｯﾄﾞﾊｰﾈｽ
2	DHAi-3419FCZZ	AE	DS	N	C	OP-PD harness	OP-PD ﾊｰﾈｽ
3	QCNW-0197FCZZ	AL	EB	N	C	MFP-OP FFC	MFP-OP FFC
4	QCNW-0213FCZZ	AH	DX	N	C	OP-KEY FFC	OP-KEY FFC
5	DHAi-3413FCZZ	AN	EG	N	C	OSM harness	OSM ﾊｰﾈｽ
6	DHAi-3345FC11	AY	FQ	N	C	Delivery harness	排紙ﾊｰﾈｽ
7	DHAi-3361FCZZ	AT	EZ	N	C	MSW harness (100V Series)	MSW ﾊｰﾈｽ
	DHAi-3400FCZZ	AU	EZ	N	C	MSW harness (200V Series)	MSW ﾊｰﾈｽ
8	DHAi-3443FC12	AY	FQ	N	C	MFP-ICU harness	MFP-ICU ﾊｰﾈｽ
9	DHAi-3416FCZZ	AN	EQ	N	C	Driver PWB harness	駆動基板ﾊｰﾈｽ
10	DHAi-3404FCZZ	AR	EQ	N	C	DHSW harness (Japan only)	DHSW ﾊｰﾈｽ
11	DHAi-3405FCZZ	AG	DX	N	C	DH harness (Japan only)	DH ﾊｰﾈｽ
12	DHAi-3410FCZZ	AL	EB	N	C	BLU interface harness	BLU 中継ﾊｰﾈｽ
13	DHAi-3360FCZZ	AU	EZ	N	C	Cassette guide harness	ｶｾｯﾄｶﾞｲﾄﾞﾊｰﾈｽ
14	DHAi-3348FCZZ	AR	EQ	N	C	Multi interface harness	手差し中継ﾊｰﾈｽ
15	QCNW-0211FCZZ	AF	DS	N	C	PCU interface FFC	PCU 間 FFC
16	DHAi-3363FCZZ	AT	EZ	N	C	DC harness	DC ﾊｰﾈｽ
17	LHLDW1223FCZZ	AA	DJ		C	Wire lock holder(White)	ｵﾒｶﾞﾛｯｸ
18	LHLDW1545FCZZ	AB	DJ	N	C	Wire lock holder(Black)	ｵﾒｶﾞﾛｯｸ
19	LBNDJ0043FCZ1	AA	DJ		C	Band	ﾊﾞﾝﾄﾞ
20	DHAi-3426FCZZ	AQ	EG	N	C	FAX AC harness (AR-C260F/C260FP)	FAX AC ﾊｰﾈｽ

35 配線部 (Wiring section)

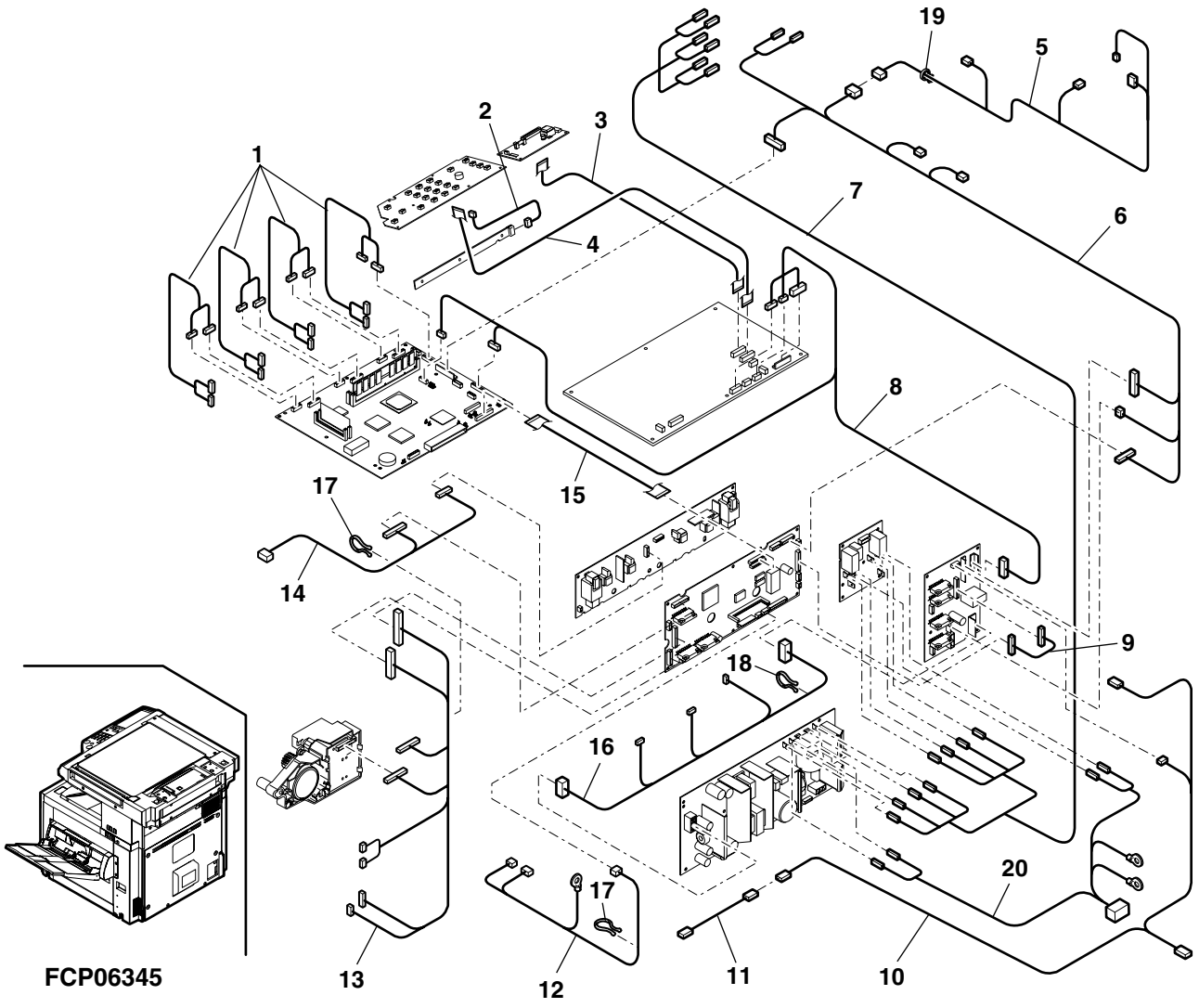

36 梱包材&付属品 (Packing Material & Accessories)

NO.	PARTS CODE	PRICE RANK		NEW MARK	PART RANK	DESCRIPTION
		Ex.	Ja.			
1	SPAKC6335DSZZ	BB	GD	N	D	Packing case [Japan](AR-C260S) ﾊﾟｯｷﾝｸﾞｹｰｽ
	SPAKC6383DSZZ	AZ	FQ	N	D	Packing case [Japan](AR-C260F) ﾊﾟｯｷﾝｸﾞｹｰｽ
	SPAKC6383DS11	BF	GN	N	D	Packing case [Japan](AR-C260FP) ﾊﾟｯｷﾝｸﾞｹｰｽ
	SPAKC6334DS12	BU	NN	N	D	Packing case [SRS/SRSSC,Indonesia,STCL](AR-C260) ﾊﾟｯｷﾝｸﾞｹｰｽ
	SPAKC6334DS11	BE	GN	N	D	Packing case [U.S.A Other countries](AR-C260) ﾊﾟｯｷﾝｸﾞｹｰｽ
	SPAKC6335DS11	BE	GN	N	D	Packing case [Japan](AR-C260M) ﾊﾟｯｷﾝｸﾞｹｰｽ
	SPAKC6334DS15	BU	NN	N	D	Packing case [SRS/SRSSC,Indonesia,STCL](AR-C260M) ﾊﾟｯｷﾝｸﾞｹｰｽ
	SPAKC6334DS14	BE	GN	N	D	Packing case [U.S.A Other countries](AR-C260M) ﾊﾟｯｷﾝｸﾞｹｰｽ
2	SPAKA6338FCZZ	AL	EB	N	D	Top packing cushion L [Japan](AR-C260S/C260M) ﾃﾝｱﾄﾞ L
	SPAKA6384FCZZ	AL	EB	N	D	Top packing cushion L [Japan](AR-C260F/C260FP) ﾃﾝｱﾄﾞ L
	SPAKA6336FCZZ	AK	EB	N	D	Top packing cushion L [Except Japan] ﾃﾝｱﾄﾞ L
3	SPAKA6339FCZZ	AN	EQ	N	D	Top packing cushion R [Japan](AR-C260S/C260M) ﾃﾝｱﾄﾞ R
	SPAKA6385FCZZ	AP	EQ	N	D	Top packing cushion R [Japan](AR-C260F/C260FP) ﾃﾝｱﾄﾞ R
	SPAKA6337FCZZ	AN	EG	N	D	Top packing cushion R [Except Japan] ﾃﾝｱﾄﾞ R
4	SSAKZ0018FCZZ	AN	EG		D	Vinyl bag ﾎﾟﾘﾌﾞｸﾛ
5	CPAKA6340FC01	AW	FG	N	D	Bottom packing case unit 底ｹｰｽﾕﾆｯﾄ
7	SPAKA0581YSZZ	AE	DS	N	C	DRCA slleve DRCA ｽﾘｰﾌﾞ
8	SSAKA3640QCZZ	AB	DD		C	Vinyl bag(320×690mm) ﾎﾟﾘﾌﾞｸﾛ
9	DUNT-7255DSZZ	AZ	FQ	N	E	Delivery tray unit (Japan only) 排紙ﾄﾚｲﾕﾆｯﾄ
10	TiNSJ2329FCZZ	BB	GD	N	D	Operation manual(COPY) (Japan only) 取扱説明書 (ｺﾋﾟｰ)
	TiNSJ2330FCZZ	BA	FX		D	Operation manual(FAX) (Japan only)[AR-C260F/C260FP] 取扱説明書 (FAX)
	TiNSJ2331FCZZ	AV	FG	N	D	Operation manual(KEY) (Japan only) 取扱説明書 (ｷｰ)
	TiNSJ2362FCZZ	AK	EB	N	D	Operation manual(COLOR) (Japan only)[AR-C260M/C260FP] 取扱説明書 (ｶﾗｰ)
	TiNSJ2378FCZZ	AS	EQ	N	D	Operation manual(MFP install) (Japan only)[AR-C260M/C260FP] 取扱説明書 (MFP ｲﾝｽﾄｰﾙ)
	TiNSJ2444FCZZ	AM	EG	N	D	Operation manual(S11) (Japan only) 取扱説明書 (S11)
	TiNSE2332FCZZ	BA	FX	N	D	Operation manual(COPY) (English)[U.S.A] 取扱説明書 (ｺﾋﾟｰ)
	TiNSE2347FCZZ	AP	EQ	N	D	Operation manual(KEY) (English)[U.S.A] 取扱説明書 (ｷｰ)
	TiNSE2363FCZZ	AM	EG	N	D	Operation manual(COLOR) (English)[U.S.A][AR-C260M] 取扱説明書 (ｶﾗｰ)
	TiNSE2379FCZZ	AN	EQ	N	D	Operation manual(MFP install) (English)[U.S.A][AR-C260M] 取扱説明書 (MFP ｲﾝｽﾄｰﾙ)
	TiNSE2445FCZZ	AM	EG	N	D	Operation manual(S11) (English)[U.S.A] 取扱説明書 (S11)
	TiNSF2336FCZZ	BA	FX	N	D	Operation manual(COPY) (French)[CANADA] 取扱説明書 (ｺﾋﾟｰ)
	TiNSF2351FCZZ	AP	EQ	N	D	Operation manual(KEY) (French)[CANADA] 取扱説明書 (ｷｰ)
	TiNSF2367FCZZ	AM	EG	N	D	Operation manual(COLOR) (French)[CANADA][AR-C260M] 取扱説明書 (ｶﾗｰ)
	TiNSF2383FCZZ	AN	EQ	N	D	Operation manual(MFP install) (French)[CANADA][AR-C260M] 取扱説明書 (MFP ｲﾝｽﾄｰﾙ)
	TiNSF2449FCZZ	AM	EG	N	D	Operation manual(S11) (French)[CANADA] 取扱説明書 (S11)
	TiNSE2334FCZZ	BB	GD	N	D	Operation manual(COPY) (English)[Other countries] 取扱説明書 (ｺﾋﾟｰ)
	TiNSE2349FCZZ	AQ	EQ	N	D	Operation manual(KEY) (English)[Other countries] 取扱説明書 (ｷｰ)
	TiNSE2365FCZZ	AM	EG	N	D	Operation manual(COLOR) (English)[Other countries][AR-C260M] 取扱説明書 (ｶﾗｰ)
	TiNSE2381FCZZ	AN	EQ	N	D	Operation manual(MFP install) (English)[Other countries][AR-C260M] 取扱説明書 (MFP ｲﾝｽﾄｰﾙ)
	TiNSE2447FCZZ	AM	EG	N	D	Operation manual(S11) (English)[Other countries] 取扱説明書 (S11)
	TiNSE2333GHZZ	*	*	N	D	Operation manual(COPY) (English)[U.Kingdum] 取扱説明書 (ｺﾋﾟｰ)
	TiNSE2348GHZZ	*	*	N	D	Operation manual(KEY) (English)[U.Kingdum] 取扱説明書 (ｷｰ)
	TiNSE2364GHZZ	*	*	N	D	Operation manual(COLOR) (English)[U.Kingdum][AR-C260M] 取扱説明書 (ｶﾗｰ)
	TiNSE2380GHZZ	*	*	N	D	Operation manual(MFP install) (English)[U.Kingdum][AR-C260M] 取扱説明書 (MFP ｲﾝｽﾄｰﾙ)
	TiNSE2446GHZZ	*	*	N	D	Operation manual(S11) (English)[U.Kingdum] 取扱説明書 (S11)
	TiNSE2334GHZZ	*	*	N	D	Operation manual(COPY) (English)[Europe] 取扱説明書 (ｺﾋﾟｰ)
	TiNSE2349GHZZ	*	*	N	D	Operation manual(KEY) (English)[Europe] 取扱説明書 (ｷｰ)
	TiNSE2365GHZZ	*	*	N	D	Operation manual(COLOR) (English)[Europe][AR-C260M] 取扱説明書 (ｶﾗｰ)
	TiNSE2381GHZZ	*	*	N	D	Operation manual(MFP install) (English)[Europe][AR-C260M] 取扱説明書 (MFP ｲﾝｽﾄｰﾙ)
	TiNSE2447GHZZ	*	*	N	D	Operation manual(S11) (English)[Europe] 取扱説明書 (S11)
	TiNSG2341GHZZ	*	*	N	D	Operation manual(COPY) (German) 取扱説明書 (ｺﾋﾟｰ)
	TiNSG2356GHZZ	*	*	N	D	Operation manual(KEY) (German) 取扱説明書 (ｷｰ)
	TiNSG2372GHZZ	*	*	N	D	Operation manual(COLOR) (German)[AR-C260M] 取扱説明書 (ｶﾗｰ)
	TiNSG2388GHZZ	*	*	N	D	Operation manual(MFP install) (German)[AR-C260M] 取扱説明書 (MFP ｲﾝｽﾄｰﾙ)
	TiNSG2454GHZZ	*	*	N	D	Operation manual(S11) (German) 取扱説明書 (S11)
	TiNSF2336GHZZ	*	*	N	D	Operation manual(COPY) (French) 取扱説明書 (ｺﾋﾟｰ)
	TiNSF2351GHZZ	*	*	N	D	Operation manual(KEY) (French) 取扱説明書 (ｷｰ)
	TiNSF2367GHZZ	*	*	N	D	Operation manual(COLOR) (French)[AR-C260M] 取扱説明書 (ｶﾗｰ)
	TiNSF2383GHZZ	*	*	N	D	Operation manual(MFP install) (French)[AR-C260M] 取扱説明書 (MFP ｲﾝｽﾄｰﾙ)
	TiNSF2449GHZZ	*	*	N	D	Operation manual(S11) (French) 取扱説明書 (S11)
	TiNSS2337GHZZ	*	*	N	D	Operation manual(COPY) (Spanish) 取扱説明書 (ｺﾋﾟｰ)
	TiNSS2352GHZZ	*	*	N	D	Operation manual(KEY) (Spanish) 取扱説明書 (ｷｰ)
	TiNSS2368GHZZ	*	*	N	D	Operation manual(COLOR) (Spanish)[AR-C260M] 取扱説明書 (ｶﾗｰ)
	TiNSS2384GHZZ	*	*	N	D	Operation manual(MFP install) (Spanish)[AR-C260M] 取扱説明書 (MFP ｲﾝｽﾄｰﾙ)
	TiNSS2450GHZZ	*	*	N	D	Operation manual(S11) (Spanish) 取扱説明書 (S11)
	TiNSi2338GHZZ	*	*	N	D	Operation manual(COPY) (Italian) 取扱説明書 (ｺﾋﾟｰ)
	TiNSi2353GHZZ	*	*	N	D	Operation manual(KEY) (Italian) 取扱説明書 (ｷｰ)
	TiNSi2369GHZZ	*	*	N	D	Operation manual(COLOR) (Italian)[AR-C260M] 取扱説明書 (ｶﾗｰ)
	TiNSi2385GHZZ	*	*	N	D	Operation manual(MFP install) (Italian)[AR-C260M] 取扱説明書 (MFP ｲﾝｽﾄｰﾙ)

36 梱包材&付属品 (Packing Material & Accessories)

NO.	PARTS CODE	PRICE RANK Ex.	PRICE RANK Ja.	NEW MARK	PART RANK	DESCRIPTION		
	TiNSi2451GHZZ	*	*	N	D	Operation manual(S11)	(Italian)	取扱説明書 (S11)
	TiNSH2339GHZZ	*	*	N	D	Operation manual(COPY)	(Dutch)	取扱説明書 (ｺﾋﾟｰ)
	TiNSH2354GHZZ	*	*	N	D	Operation manual(KEY)	(Dutch)	取扱説明書 (ｷｰ)
	TiNSH2370GHZZ	*	*	N	D	Operation manual(COLOR)	(Dutch)[AR-C260M]	取扱説明書 (ｶﾗｰ)
	TiNSH2386GHZZ	*	*	N	D	Operation manual(MFP install)	(Dutch)[AR-C260M]	取扱説明書 (MFP ｲﾝｽﾄｰﾙ)
	TiNSH2452GHZZ	*	*	N	D	Operation manual(S11)	(Dutch)	取扱説明書 (S11)
	TiNSW2340GHZZ	*	*	N	D	Operation manual(COPY)	(Swedish)	取扱説明書 (ｺﾋﾟｰ)
	TiNSW2355GHZZ	*	*	N	D	Operation manual(KEY)	(Swedish)	取扱説明書 (ｷｰ)
	TiNSW2371GHZZ	*	*	N	D	Operation manual(COLOR)	(Swedish)[AR-C260M]	取扱説明書 (ｶﾗｰ)
	TiNSW2387GHZZ	*	*	N	D	Operation manual(MFP install)	(Swedish)[AR-C260M]	取扱説明書 (MFP ｲﾝｽﾄｰﾙ)
	TiNSW2453GHZZ	*	*	N	D	Operation manual(S11)	(Swedish)	取扱説明書 (S11)
	TiNSZ2342GHZZ	*	*	N	D	Operation manual(COPY)	(Norwegian)	取扱説明書 (ｺﾋﾟｰ)
	TiNSZ2357GHZZ	*	*	N	D	Operation manual(KEY)	(Norwegian)	取扱説明書 (ｷｰ)
	TiNSZ2373GHZZ	*	*	N	D	Operation manual(COLOR)	(Norwegian)[AR-C260M]	取扱説明書 (ｶﾗｰ)
	TiNSZ2389GHZZ	*	*	N	D	Operation manual(MFP install)	(Norwegian)[AR-C260M]	取扱説明書 (MFP ｲﾝｽﾄｰﾙ)
	TiNSZ2455GHZZ	*	*	N	D	Operation manual(S11)	(Norwegian)	取扱説明書 (S11)
	TiNSZ2343GHZZ	*	*	N	D	Operation manual(COPY)	(Finnish)	取扱説明書 (ｺﾋﾟｰ)
	TiNSZ2358GHZZ	*	*	N	D	Operation manual(KEY)	(Finnish)	取扱説明書 (ｷｰ)
	TiNSZ2374GHZZ	*	*	N	D	Operation manual(COLOR)	(Finnish)[AR-C260M]	取扱説明書 (ｶﾗｰ)
	TiNSZ2390GHZZ	*	*	N	D	Operation manual(MFP install)	(Finnish)[AR-C260M]	取扱説明書 (MFP ｲﾝｽﾄｰﾙ)
	TiNSZ2456GHZZ	*	*	N	D	Operation manual(S11)	(Finnish)	取扱説明書 (S11)
	TiNSD2344GHZZ	*	*	N	D	Operation manual(COPY)	(Danish)	取扱説明書 (ｺﾋﾟｰ)
	TiNSD2359GHZZ	*	*	N	D	Operation manual(KEY)	(Danish)	取扱説明書 (ｷｰ)
	TiNSD2375GHZZ	*	*	N	D	Operation manual(COLOR)	(Danish)[AR-C260M]	取扱説明書 (ｶﾗｰ)
10	TiNSD2391GHZZ	*	*	N	D	Operation manual(MFP install)	(Danish)[AR-C260M]	取扱説明書 (MFP ｲﾝｽﾄｰﾙ)
	TiNSD2457GHZZ	*	*	N	D	Operation manual(S11)	(Danish)	取扱説明書 (S11)
	CCADZ1561FC01	AK	DX		D	Maintenance card	(Japan)	ﾒﾝﾃﾅﾝｽｶｰﾄﾞ
	CCADZ1518FC01	AB	DJ		D	Maintenance card	(Except Japan)	ﾒﾝﾃﾅﾝｽｶｰﾄﾞ
	TCADZ6017FCZZ	AF	DS	N	D	MSDS card	(U.S.A,Canada)	MSDS ｶｰﾄﾞ
	TCADZ6017GHZZ	*	*	N	D	MSDS card	(English)[Europe]	MSDS ｶｰﾄﾞ
	PSHEP5013FCZ1	*	*	N	D	Key sheet	(French)	ｷｰｼｰﾄ
	PSHEP5013FCZZ	*	*	N	D	Key sheet	(German)	ｷｰｼｰﾄ
	PSHEP5013FCZ2	*	*	N	D	Key sheet	(Spanish)	ｷｰｼｰﾄ
	PSHEP5013FCZ3	*	*	N	D	Key sheet	(Italian)	ｷｰｼｰﾄ
	PSHEP5013FCZ4	*	*	N	D	Key sheet	(Dutch)	ｷｰｼｰﾄ
	PSHEP5013FCZ5	*	*	N	D	Key sheet	(Swedish)	ｷｰｼｰﾄ
	PSHEP5013FCZ6	*	*	N	D	Key sheet	(Norwegian)	ｷｰｼｰﾄ
	PSHEP5013FCZ7	*	*	N	D	Key sheet	(Finnish)	ｷｰｼｰﾄ
	PSHEP5013FCZ8	*	*	N	D	Key sheet	(Danish)	ｷｰｼｰﾄ
	TCADS1512FCZZ	AB	DJ		D	Supply set up card	(Australia,New Zealand)	納入設置報告書
	TCADS1511FCZZ	AC	DJ		D	Supply set up card	(Europe)	納入設置報告書
	CDSKA0014FC31	AT	EZ	N	D	CD-ROM	(AR-C260M/C260FP)[Japan]	CD-ROM
	CDSKA0014FC32	AT	EZ	N	D	CD-ROM	(AR-C260M)[U.S.A other countries]	CD-ROM
	CDSKA0014GH35	*	*	N	D	CD-ROM	(AR-C260M)[Europe]	CD-ROM
	CDSKA0014FC35	AT	EZ	N	D	CD-ROM	(AR-C260M)[Yenen,Saudi Arabia, Oman,Qutar,Bahrain,Kuwait,UAE]	CD-ROM
	CDSKA0002QS33	AP	EQ	N	D	NIC CD-ROM	(AR-C260M/C260FP)[Except Europe]	NIC CD-ROM
	CDSKA0002TS33	*	*	N	D	NIC CD-ROM	(AR-C260M)[Europe]	NIC CD-ROM
	UKOG-0304FCZZ	AQ	EQ	N	D	Color chart	(AR-C260M/C260FP)	ｶﾗｰﾁｬｰﾄ
⚠	QACCJ6912QCPZ	AV	FG	N	B	AC cord	(Japan,Philippines)	AC ｺｰﾄﾞ
⚠	QACCD7912QCPZ	AS	EQ	N	B	AC cord	(U.S.A,Canada)	AC ｺｰﾄﾞ
⚠	QACCL7922QCPZ	AN	EQ	N	B	AC cord	(Australia,New zealand)	AC ｺｰﾄﾞ
⚠	QACCB7626QCPZ	*	*	N	B	AC cord	(U.Kingdom)	AC ｺｰﾄﾞ
⚠	QACCE6922QCPZ	AQ	EQ	N	B	AC cord	(SEEG,STCL)	AC ｺｰﾄﾞ
⚠	DHAi-3332DSZZ	BB	GD	N	B	AC cord	(SRS/SRSSC,Indonesia)	AC ｺｰﾄﾞ
⚠	DHAi-3332DS11	BB	GD	N	B	AC cord	(India)	AC ｺｰﾄﾞ
⚠	QACCB7623QCZZ	BB	GD	N	B	AC cord	(Other countries)	AC ｺｰﾄﾞ
11								
12	SPAKA6346FCZZ	AD	DJ	N	D	Accesories spacer	(Japan only)	付属品ｽﾍﾟｰｻｰ
13	SSAKA2440QCZZ	AB	DD		D	Vinyl bag(280×410mm)		ﾎﾟﾘﾌﾞｸﾛ
14	LX-BZ0555FCZZ	AB	DD		D	Screw		DVS 取付けﾋﾞｽ
15	TCADZ1178FCZZ	AB	DJ		D	Screw remove caution tag		ﾋﾞｽ開梱注意ｶｰﾄﾞ
16	LX-WZ0326FCZZ	AA	DD		D	MB cushion B9		MB ｸｯｼｮﾝ B9
17	SPAKA6302FCZ1	AD	DJ	N	D	Packing add		転写固定材
18	SPAKA4693FCZZ	AE	DS		D	Packing add OC	[Japan](AR-C260S)	OC 保護材
21	SSAKA5003CCZZ	AA	DD		C	Vinyl bag(140×260mm)		ﾎﾟﾘﾌﾞｸﾛ
22	SPAKA6075FCZZ	AE	DJ	N	D	RSPF protect sheet	[Japan](AR-C260F/C260FP)	RSPF 保護ｼｰﾄ
	SPAKA6450FCZZ	AD	DJ	N	D	OC protect sheet	(Other Model)	OC 保護ｼｰﾄ
24	TCADZ1275FCZZ	AB	DJ		D	Cassette rotation plate caution tag		ｶｾｯﾄ回転板注意ｶｰﾄﾞ
25	LHLDW1226FCZZ	AB	DJ		C	Turn fastener		ﾀｰﾝﾌｧｽﾅｰ
26	SPAKA6345FCZZ	AE	DJ	N	D	Scanner reinforce add		ｽｷｬﾅｰ補強材
27	QCNW-7197XCZZ	AH	DX		C	Line cable	[Japan](AR-C260F/C260FP)	ﾗｲﾝｹｰﾌﾞﾙ
28	RCORF0046FCZZ	AH	DX	N	C	Ferrite core	[Japan](AR-C260F/C260FP)	ﾌｪﾗｲﾄｺｱ
29	SSAKH3013CCZZ	AA	DD		C	Vinyl bag(120×220mm)	[Japan](AR-C260F/C260FP)	ﾎﾟﾘﾌﾞｸﾛ
30	SSAKA0006UCZZ	AA	DD		C	Vinyl bag(50×60mm)		ﾎﾟﾘﾌﾞｸﾛ

36 梱包材&付属品 (Packing Material & Accessories)

NO.	PARTS CODE	PRICE RANK		NEW MARK	PART RANK	DESCRIPTION
		Ex.	Ja.			
31	XBBSE40P06000	AA	DD		C	Screw(4×6) [Japan](AR-C260F/C260FP) ﾋﾞｽ
32	MLEVP0864FCZZ	AD	DJ	N	C	Full actuator FU 満杯ｱｸﾁｭｴｰﾀ FU
101	TCADZ6015FCZZ	AC	DJ	N	D	Set up card 設置手順書
102	SPAKA6440FCZZ	AL	EB	N	D	Scanner reinforce slleve (AR-C260F/C260FP) ｽｷｬﾅｰ補強ｽﾘｰﾌﾞ
103	SPAKA6386FCZZ	AL	EB	N	D	ADF spacer (AR-C260F/C260FP) ADF ｽﾍﾟｰｻｰ
104	SPAKA6235DSZZ	AH	DX	N	D	Joint C (AR-C260F/C260FP) ｼﾞｮｲﾝﾄ C
105	TCADZ1593FCZZ	AC	DJ	N	D	Process insert inst card ﾌﾟﾛｾｽ挿入手順書
106	GCOVZ0237FCZZ	AZ	FQ	N	D	Dust cover (Yenen,Saudi Arabia, Oman,Qutar,Bahrain,Kuwait,UAE) ﾀﾞｽﾄｶﾊﾞｰ

36 梱包材&付属品 (Packing Material & Accessories)

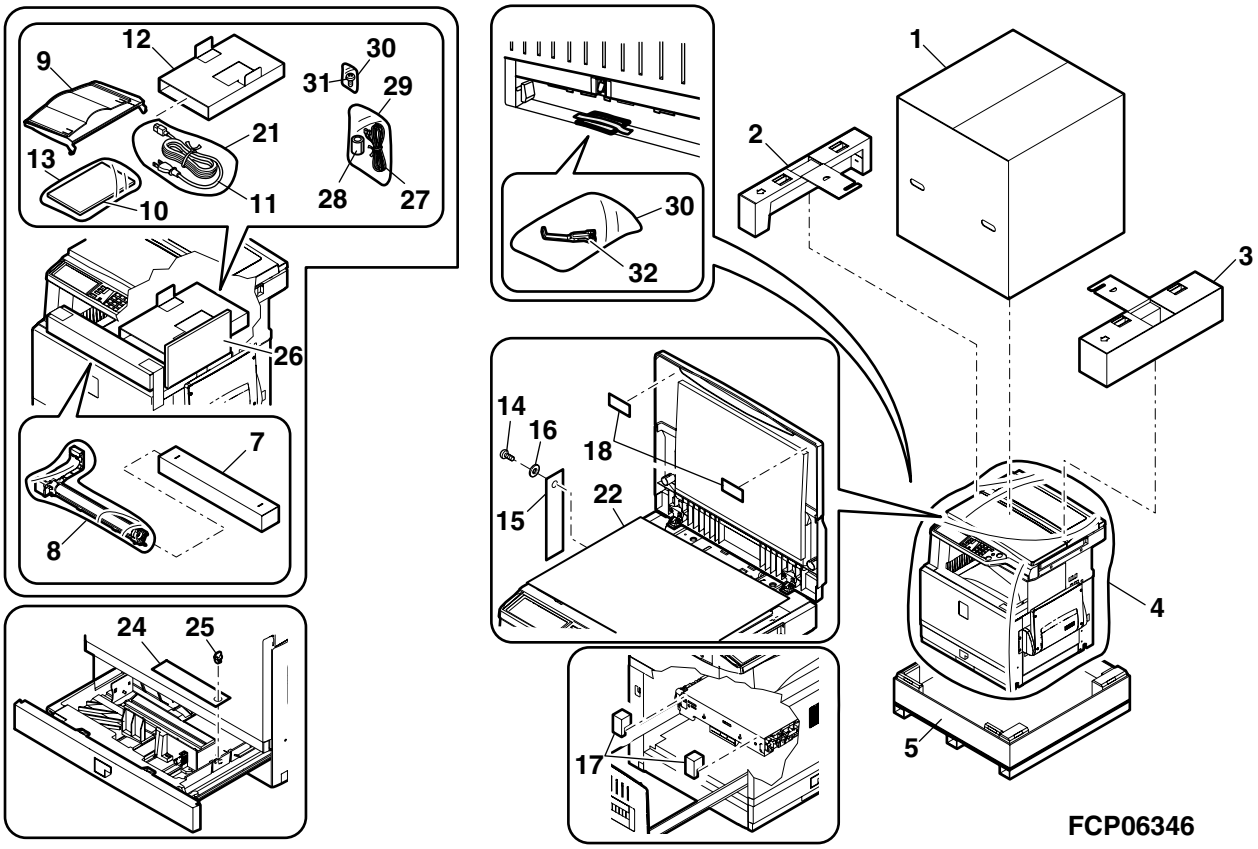

37 FAX BOX unit(AR-C260F/AR-C260FP)

NO.	PARTS CODE	PRICE RANK		NEW MARK	PART RANK	DESCRIPTION	
		Ex.	Ja.				
1	PCOVP1564FCZZ	AF	DS		D	FAX ROM cover	FAX ROM ｶﾊﾞｰ
2	GCAB-0947FCZZ	AT	EZ		D	FAX rear cabinet	FAX 後ｷｬﾋﾞ
3	LHLDZ1494FCZZ	AF	DS		C	FAX AC cord holder B	FAX AC ｺｰﾄﾞﾎﾙﾀﾞｰ B
4	LFiX-0567FCZZ	AD	DJ		C	FAX holder cord fixing plate	FAX ﾎﾙﾀﾞｰｺｰﾄﾞ押え
5	DHAi-3441FCZZ	AV	FG	N	C	FAX power supply harness	FAX 電源ﾊｰﾈｽ
6	LHLDZ1493FCZZ	AF	DS		C	FAX AC cord holder C	FAX AC ｺｰﾄﾞﾎﾙﾀﾞｰ C
7	XEBSE30P12000	AA	DD		C	Screw(3×12)	ﾋﾞｽ
8	XEBSE30P10000	AA	DD		C	Screw(3×10)	ﾋﾞｽ
9	XBPSD40P06K00	AA	DD		C	Screw(4×6K)	ﾋﾞｽ
10	XBPSD40P40XS0	AA	DD		C	Screw(4x40XS)	ﾋﾞｽ
11	RDENC0004FCZZ	BV	RB		E	FAX AC power supply unit	FAX AC 電源基板
12	LBSHZ1001ACZZ	AB	DD		C	Edge saddle	ｴｯｼﾞｻﾄﾞﾙ
13	XHBSE30P06000	AA	DD		C	Screw(3×6)	ﾋﾞｽ
14	LPLTM5788FCZZ	AP	EQ		C	FAX power supply fixing plate	FAX 電源取付板
15	QSW-C9295QCZZ	AL	EB		B	FAX power supply switch(ALP SDDJF3)	FAX 電源ｽｲｯﾁ
16	LBSHZ2050SCZZ	AB	DD		C	Edge saddle(EDS-1208U)	ｴｯｼﾞｻﾄﾞﾙ
17	LX-WZ0443FCZZ	AB	DD		C	Washer	ｱｰｽ用ﾋﾗﾜｯｼｬｰ
18	LSUPP0118FCZZ	AB	DJ		C	PWB supporter(SPLSN6)	基板ｻﾎﾟｰﾀｰ
19	LHLDW1499FCZZ	AC	DJ		C	Wire saddle(WS-2U)	ﾜｲﾔｰｻﾄﾞﾙ
20	LSUPP0076FCZZ	AA	DD		C	PWB supporter(SPSN6U)	基板ｻﾎﾟｰﾀｰ
21	XBPSD30P08KS0	AA	DD		C	Screw(3x8KS)	ﾋﾞｽ
22	LPLTM5892FCZZ	AD	DJ		C	FAX separate plate	FAX 仕切り板
23	LFiX-0560FCZZ	AF	DS		C	FAX AC cord fixing plate	FAX AC ｺｰﾄﾞ押え
24	PSHEZ4933FCZZ	AD	DJ		C	FAX MD cover sheet	FAX MD ｶﾊﾞｰｼｰﾄ
25	DHAi-3207FC11	AG	DX	N	C	FAX switch harness	FAX ｽｲｯﾁﾊｰﾈｽ
26	DHAi-3204FC11	AM	EG	N	C	FAX BOX harness	FAX BOX ﾊｰﾈｽ
27	GCAB-0946FCZ2	AZ	FQ		D	FAX front cabinet B	FAX 前ｷｬﾋﾞ B
28	LPLTM6075FCZ1	AS	EQ	N	C	FAX fixing plate N	FAX 取付板 N
29	LPLTM6108FCZZ	AF	DS	N	C	FAX fixing plate B	FAX 取付板 B
30	LPLTM5789FCZZ	AF	DS		C	Speaker fixing plate	ｽﾋﾟｰｶｰ取付板
31	DUNT-7136FCA1	AN	EQ	N	E	FAX speaker unit	FAX ｽﾋﾟｰｶｰﾕﾆｯﾄ
32	XHBSE40P05000	AB	DD		C	Screw(4×5)	ﾋﾞｽ
33	PSHEZ4879FCZZ	AH	DX		C	FAX front sheet	FAX 前ｼｰﾄ
34	CPWBN1491FCE1	CA	TV		E	TEL/LIU PWB	TEL/LIU 基板
35	LPLTM5787FCZZ	AQ	EQ		C	FAX PWB fixing plate	FAX 基板取付板
36	CPWBN1472FCE4	CG	UM		E	Modem control PWB	ﾓﾃﾞﾑｺﾝﾄﾛｰﾙ基板
37	QCNW-0210FCZZ	AE	DJ		C	FAX interface FFC	FAX 中継 FFC
38	VHi28F082L06S	BF	GN	N	E	FAX FLASH ROM(28F082L06S)	FAX ﾌﾗｯｼｭﾛﾑ
39	DHAi-3206FC11	AG	DX	N	C	CIP interface harness	CIP ﾁｭｳｹｲﾊｰﾈｽ
40	LX-BZ0962FCZ1	AF	DS	N	C	Screw	ﾋﾞｽ
41	LHLDW2087SCZZ	AA	DD	N	C	Mini clanp	ﾐﾆｸﾗﾝﾌﾟ
42	XBPSE26P08000	AA	DD		C	Screw(2.6×8)	ﾋﾞｽ
43	LX-BZ0938FCZZ	AC	DD		C	Screw	ﾋﾞｽ
44	XWHSE30-05080	AA	DD		C	Washer	ﾋﾗ ﾜｯｼｬ
45	NSFTZ2738FCZZ	AD	DJ	N	C	FAX fixing shaft	FAX 取付ｼｬﾌﾄ
46	XHBSE40P08000	AA	DD		C	Screw(4×8)	ﾋﾞｽ
47	XHBSE40P10000	AA	DD		C	Screw(4×10)	ﾋﾞｽ
501	CPLTM5788FCE4	BS	MW	N	E	FAX power supply unit	FAX 電源ﾕﾆｯﾄ

37 FAX BOX unit(AR-C260F/AR-C260FP)

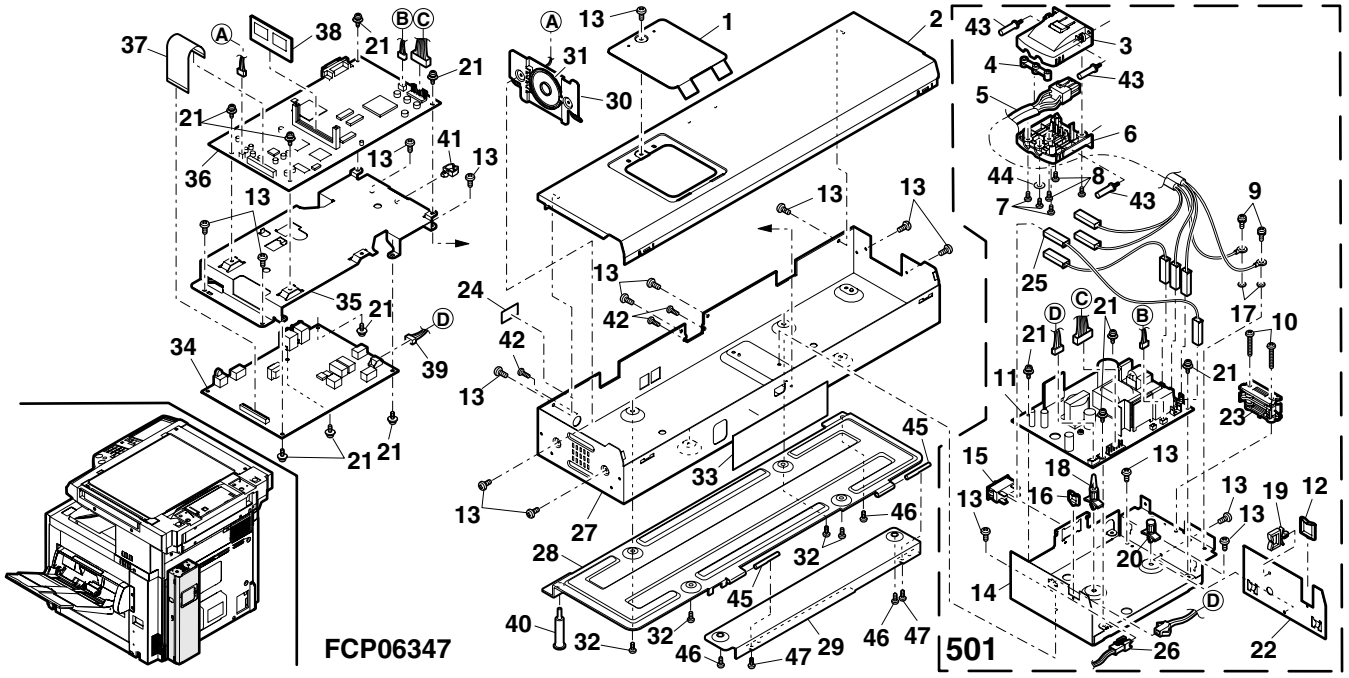

38 ﾌﾟﾘﾝﾀｺﾝﾄﾛｰﾗｰ部 (Printer controler section)[AR-C260M/AR-C260FP]

NO.	PARTS CODE	PRICE RANK		NEW MARK	PART RANK	DESCRIPTION	
		Ex.	Ja.				
1	XHBSD30P06000	AA	DD		C	Screw(3×6)	ﾋﾞｽ
2	MSPRP3168FCZZ	AC	DJ	N	C	HDD spring	HDD ｽﾌﾟﾘﾝｸﾞ
3	LX-BZ1022LCZZ	AB	DD		C	Screw	ﾋﾞｽ
4	XBPSE30P06000	AA	DD		C	Screw(3×6)	ﾋﾞｽ
5	DUNT-7269FCZZ	CD	UD		E	HDD	HDD
6	LPLTM6028FCZZ	AL	EB	N	C	HDD fixing plate	HDD 取付けﾌﾟﾚｰﾄ
7	DHAi-3454FCZZ	AK	DX	N	C	HDD P/S harness	HDD 電源ﾊｰﾈｽ
8	DHAi-3453FCZZ	AV	FG	N	C	HDD IDE harness	HDD IDE ﾊｰﾈｽ
9	CPWBN1534DS52	BP	LP	N	E	HDD PWB	HDD 基板
10	XHBSD30P05000	AA	DD		C	Screw(3×5)	ﾋﾞｽ
11	LBNDJ0016FCZZ	AA	DD		C	Band	ﾊﾞﾝﾄﾞ
12	CPWBN1521DS51	BM	HR	N	E	SCN IF PWB	SCN IF PWB
14	LX-BZ0963FCZZ	AF	DS	N	C	Screw	ﾋﾞｽ
15	XHBSD30P08000	AA	DD		C	Screw(3×8)	ﾋﾞｽ
16	CPWBN1518DS55	EB	ZZ	N	E	Printer controler PWB	ﾌﾟﾘﾝﾀｺﾝﾄﾛｰﾗｰ基板
17	LPLTM5977FCZZ	AS	EQ	N	C	Controler PWB fixing plate	ｺﾝﾄﾛｰﾗ基板取付け板
19	LX-BZ0855FCZZ	AC	DD		C	Tension spring screw	ﾃﾝｼｮﾝｽﾌﾟﾘﾝｸﾞ段ﾋﾞｽ
22	VHi28F322L33F	BM	HR	N	E	Flash ROM KANJI [Japan only]	ﾌﾗｯｼｭ ROM 漢字
23	VHi28F322L32F	BG	GT	N	E	Flash ROM PCL	ﾌﾗｯｼｭ ROM PCL
24	VHi28F081L11F	AY	FQ	N	B	Flash ROM BOOT	ﾌﾗｯｼｭ ROM BOOT
25	NFANP0071FCZZ	AZ	FX	N	B	Fan	ﾌｧﾝ
26	LHLDZ1547FCZZ	AD	DJ	N	C	Fan holder	ﾌｧﾝﾎﾙﾀﾞｰ
27	XHBSE30P06000	AA	DD		C	Screw(3×6)	ﾋﾞｽ
28	LX-BZ0901FCZZ	AC	DD		C	Screw	ﾋﾞｽ

38 ﾌﾟﾘﾝﾀｺﾝﾄﾛｰﾗｰ部 (Printer controler section)[AR-C260M/AR-C260FP]

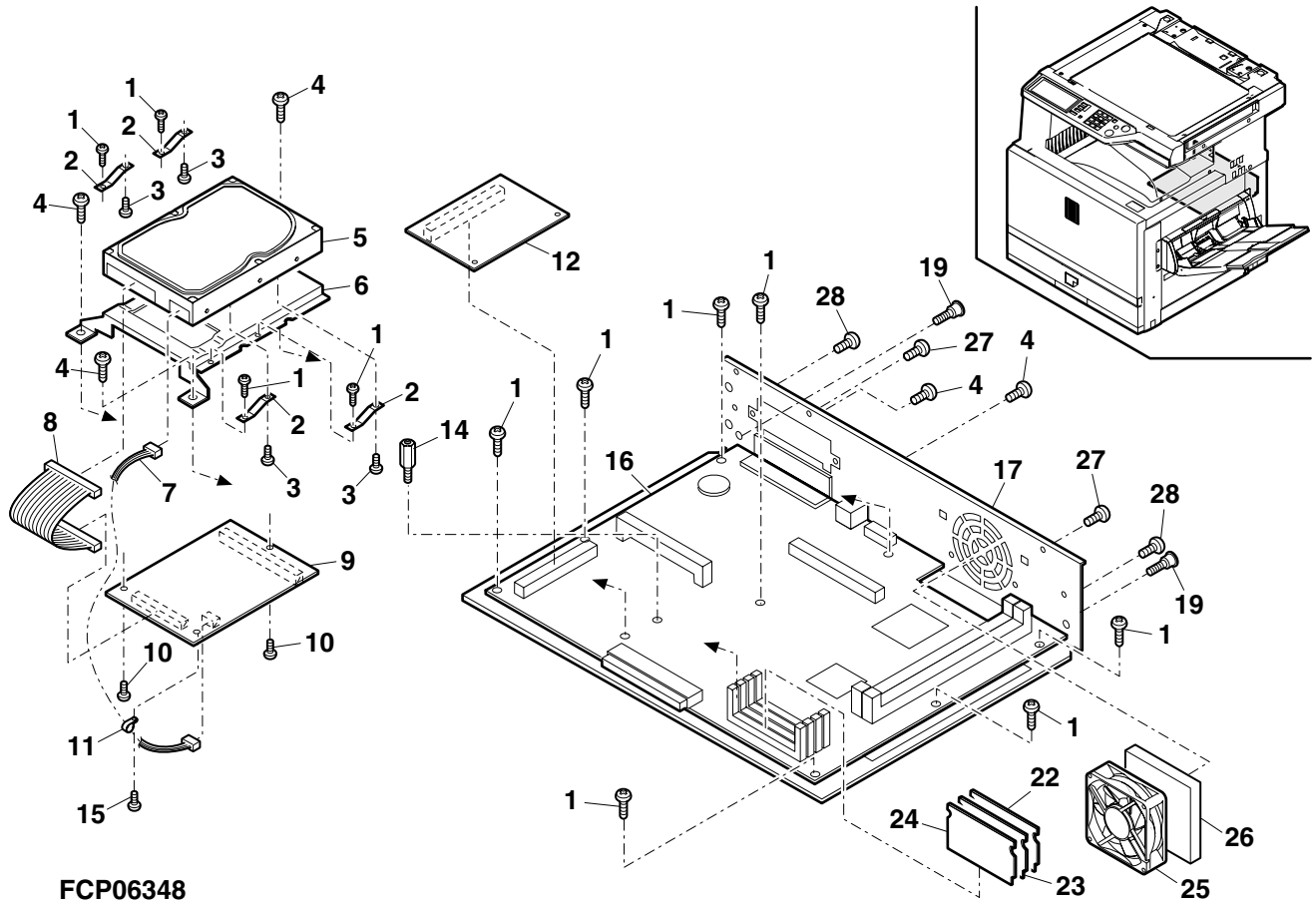

39 RADF 外装部 (RADF Exteriors)[AR-C260F/AR-C260FP]

NO.	PARTS CODE	PRICE RANK		NEW MARK	PART RANK	DESCRIPTION	
		Ex.	Ja.				
1	0CW2269P068//	AK	DX	N	C	Tray guide F	ﾄﾚｲｶﾞｲﾄﾞ F
3	0CW040100FNiT	AB	DJ	N	C	Screw(M4IT)	ﾋﾞｽ
4	0CW2269P004//	BB	GD	N	C	Paper feeding tray	給紙ﾄﾚｲ
5	0CW2268P084//	AF	DS	N	C	Tray rack gear	ﾄﾚｲﾗｯｸｷﾞﾔ
6	0CW2269P069//	AK	DX	N	C	Tray guide R	ﾄﾚｲｶﾞｲﾄﾞ R
7	0CW2269P077//	AL	EB	N	C	Tray sensor lever	ﾄﾚｲｾﾝｻｰﾚﾊﾞｰ
8	0CWE314000619	AH	DX		B	Photo interrupter	ﾌｫﾄｲﾝﾀﾗﾌﾟﾀｰ
9	0CW660580////	AA	DD		C	Nut	ﾅｯﾄ
10	0CW2268P085//	AE	DJ	N	C	Tray pinion gear	ﾄﾚｲﾋﾟﾆｵﾝｷﾞﾔ
11	0CW2268P170//	AE	DS	N	C	Tray spring	ﾄﾚｲｲﾀﾊﾞﾈ
12	0CW2269K032//	CB	TZ	N	E	Paper feeding unit	給紙ﾕﾆｯﾄ
13	0CW2214P128B/	AK	DX	N	C	Slide switch bracket	ｽﾗｲﾄﾞｽｲｯﾁﾌﾞﾗｹｯﾄ
14	0CW2185P357A/	AA	DJ		C	Screw(M3×8)	ﾋﾞｽ
15	0CW2269K232//	AY	FQ	N	B	Harness	ﾊｰﾈｽ
16	0CW2269P003//	BA	FX	N	C	Rrar cover	ﾘﾔｶﾊﾞｰ
17	0CW040080FNBi	AA	DD		C	Screw	ﾋﾞｽ
18	0CW2269P009//	AP	EQ	N	C	Rear sub cover	ﾘﾔｻﾌﾞｶﾊﾞｰ
19	0CW2158P322A/	AC	DJ	N	C	Screw	ﾋﾞｽ
20	0CW2269P365//	AV	FG	N	C	Rrar cover sound proof cushion 1	ﾘｱｶﾊﾞｰ防音ｽﾎﾟﾝｼﾞ 1
21	0CW2269P366//	AS	EQ	N	C	Rrar cover sound proof cushion 2	ﾘｱｶﾊﾞｰ防音ｽﾎﾟﾝｼﾞ 2
23	0CW2269P002//	AX	FQ	N	C	Front cover	ﾌﾛﾝﾄｶﾊﾞｰ
24	0CW2269P381//	AL	EB	N	C	LED label	LED ﾗﾍﾞﾙ
25	0CW2269K207//	AH	DX	N	E	LED PWB	LED ｷﾊﾞﾝ
26	0CW4054P220D/	AB	DJ		C	Screw	ﾋﾞｽ
27	0CW040080FZTP	AA	DD		C	Screw(M4×8)	ﾋﾞｽ
28	0CW2269K066//	BY	TF	N	D	Reverse unit	反転ﾕﾆｯﾄ
29	0CW030060FZWS	AA	DD		C	Screw	ﾋﾞｽ
501	0CW2269K064//	BG	GT	N	D	Tray unit	ﾄﾚｲﾕﾆｯﾄ

39 RADF 外装部 (RADF Exteriors)[AR-C260F/AR-C260FP]

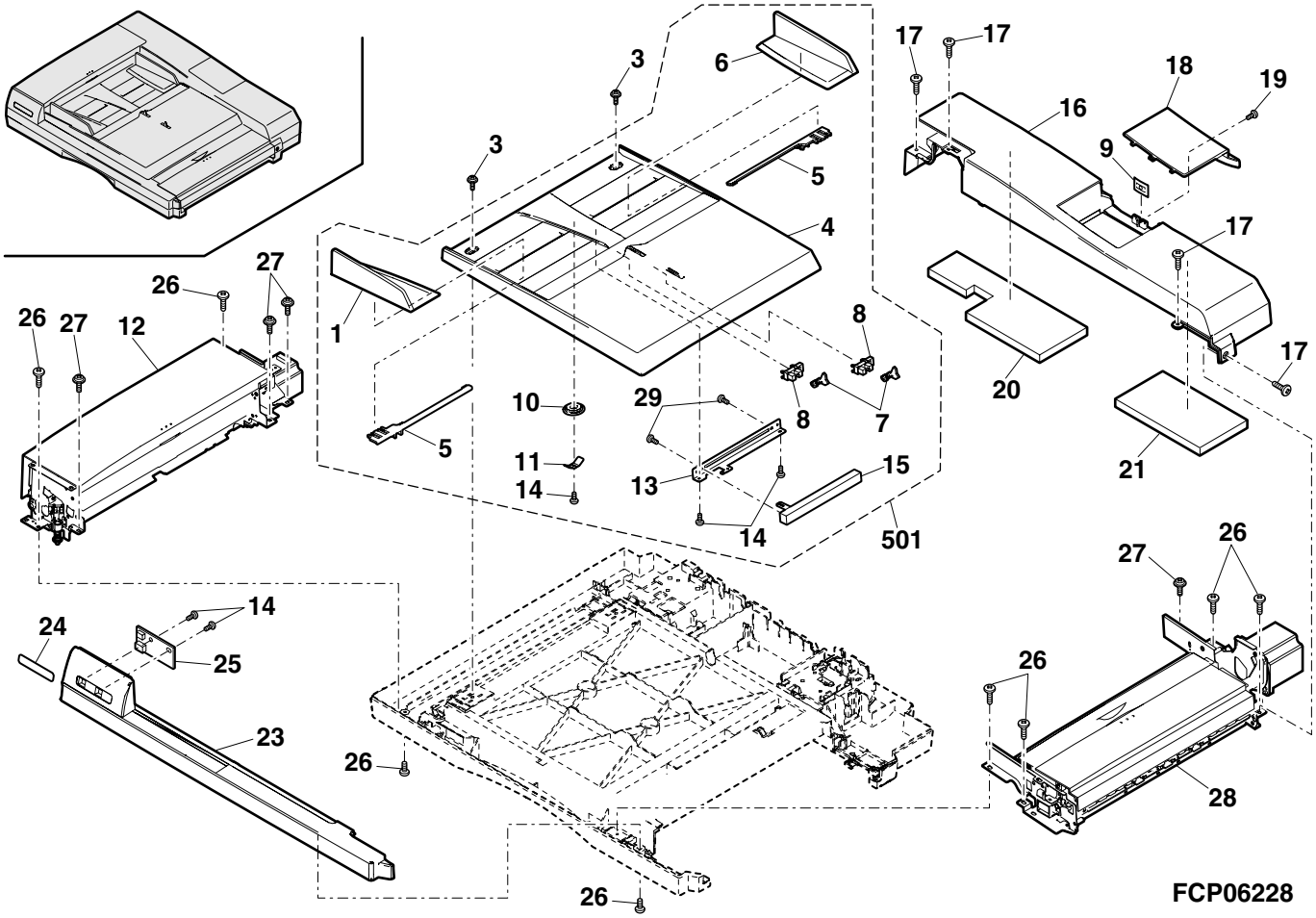

40 RADF 給紙部 1 (RADF Paper feeding section 1)[AR-C260F/AR-C260FP]

NO.	PARTS CODE	PRICE RANK		NEW MARK	PART RANK	DESCRIPTION	
		Ex.	Ja.				
1	0CW2269P133//	AG	DX	N	C	Paper feeding bracket R	給紙ｼﾃﾝﾌﾞﾗｹｯﾄ R
2	0CW2254P494A/	AB	DJ	N	C	Screw(M4×8)	ﾋﾞｽ
3	0CW2268P057//	AE	DJ	N	C	Resist arm R	ﾚｼﾞｱｰﾑ R
4	0CW2269P368//	AF	DS	N	C	Reverse cover seal cushion F	反転ｶﾊﾞｰｼｰﾙｽﾎﾟﾝｼﾞ F
5	0CW2269P362//	AD	DJ	N	C	Stopper cushion	ﾋﾟｯｸｽﾄｯﾊﾟｰｽﾎﾟﾝｼﾞ
6	0CW2269P054D/	AE	DS	N	C	Shutter	ｼｬｯﾀｰ
7	0CW2269P350//	AD	DJ	N	C	Shutter cushion	ｼｬｯﾀｰｽﾎﾟﾝｼﾞ
8	0CW2269P139//	AE	DS	N	C	Bracket	ﾌﾞﾝﾘﾌﾞﾗｹｯﾄ
10	0CW2269P364//	AF	DS	N	C	Paper feeding cover seal cushion	給紙ｶﾊﾞｰｼｰﾙｽﾎﾟﾝｼﾞ
11	0CW2268P056//	AE	DJ	N	C	Resist arm F	ﾚｼﾞｱｰﾑ F
12	0CW2269P132//	AE	DS	N	C	Paper feeding bracket F	給紙ｼﾃﾝﾌﾞﾗｹｯﾄ F
13	0CW2269P007//	AZ	FQ	N	D	Paper feeding opening/closing cover	給紙開閉ｶﾊﾞｰ
14	0CW2269P301//	AV	FG	N	B	Paper feeding roller	給紙ﾛｰﾗｰ
15	0CW2269P361//	AD	DJ	N	C	Ring 5	ﾋﾞｱｽﾘﾝｸﾞ 5
16	0CW2252P620C/	AD	DJ	N	C	Clip 4	ｸﾘｯﾌﾟ 4
18	0CW2269P052//	AD	DJ	N	C	Shutter stopper	ｼｬｯﾀｰｽﾄｯﾊﾟｰ
19	0CW2225P312A/	AD	DJ	N	C	Bearing	ｼﾞｸｳｹ
20	0CWER050SKP//	AA	DD	N	C	E-ring 5	E ﾘﾝｸﾞ 5
21	0CW2269P341B/	AF	DS	N	C	Arm F sheet	ﾋﾟｯｸｱｰﾑ F ﾏｲﾗｰ
23	0CW2269P300//	AN	EQ	N	B	Roller	ﾋﾟｯｸﾛｰﾗｰ
24	0CWNSBLT00056	AN	EG		C	Timing belt	ﾀｲﾐﾝｸﾞﾍﾞﾙﾄ
25	0CW2261P055A/	AC	DJ	N	C	Pulley	ﾌﾟｰﾘｰ
26	0CWHP02010SCH	AC	DJ	N	C	Pin(2×10)	ﾍｲｺｳﾋﾟﾝ
27	0CW2261P023E/	AD	DJ	N	C	Arbor	ｱｰﾊﾞｰ
28	0CW2269P316//	AH	DX	N	C	Spring clutch	ﾋﾟｯｸﾊﾞﾈｸﾗｯﾁ
29	0CW2269P206//	AQ	EQ	N	C	Roller shaft	ﾌｨｰﾄﾞﾛｰﾗｼｬﾌﾄ
30	0CW2269P061E/	AG	DX	N	C	Arm F	ﾋﾟｯｸｱｰﾑ F
31	0CW2269K061//	AL	EB	N	C	Roller shaft unit	ﾋﾟｯｸﾛｰﾗｰｼｬﾌﾄﾕﾆｯﾄ
33	0CWER040SKP//	AB	DD	N	C	E-ring 4	E ﾘﾝｸﾞ 4
36	0CW2269P062//	AN	EG	N	C	Arm R	ﾋﾟｯｸｱｰﾑ R
37	0CW2166P034B/	AC	DJ		C	Clip 5	ｸﾘｯﾌﾟ 5
42	0CW2269P318//	AH	DX	N	C	Gear spring clutch	ﾋﾟｯｸｷﾞﾔﾊﾞﾈｸﾗｯﾁ
43	0CW2260P002A/	AE	DJ	N	C	Gear	ｷﾞﾔ
45	0CW2269K062B/	AU	EZ	N	E	Paper feeding upper guide unit	給紙上ｶﾞｲﾄﾞﾕﾆｯﾄ
48	0CW2269P344D/	AG	DS	N	C	Paper feeding sheet	給紙ﾏｲﾗｰ
49	0CW2269P053//	AE	DS	N	C	Sensor lever	ｴﾝﾌﾟﾃｨｾﾝｻｰﾚﾊﾞｰ
50	0CW2269P071D/	AH	DX	N	C	Paper feeding maintenace cover	給紙ﾒﾝﾃﾅﾝｽｶﾊﾞｰ
51	0CW2268P076B/	AD	DJ	N	C	Flange	ﾌﾗﾝｼﾞ
52	0CW2269P355A/	AH	DX	N	C	Cushion	ｽﾎﾟﾝｼﾞ
53	0CW2269P356A/	AF	DS	N	C	Cushion	ｽﾎﾟﾝｼﾞ
60	0CW2269P459//	AG	DS	N	C	Mylar R	ﾏｲﾗｰ R
61	0CW2269P460//	AE	DS	N	C	Pick-up arm F mylar 2	ﾋﾟｯｸｱｯﾌﾟｱｰﾑ F ﾏｲﾗｰ 2

40 RADF 給紙部 1 (RADF Paper feeding section 1)[AR-C260F/AR-C260FP]

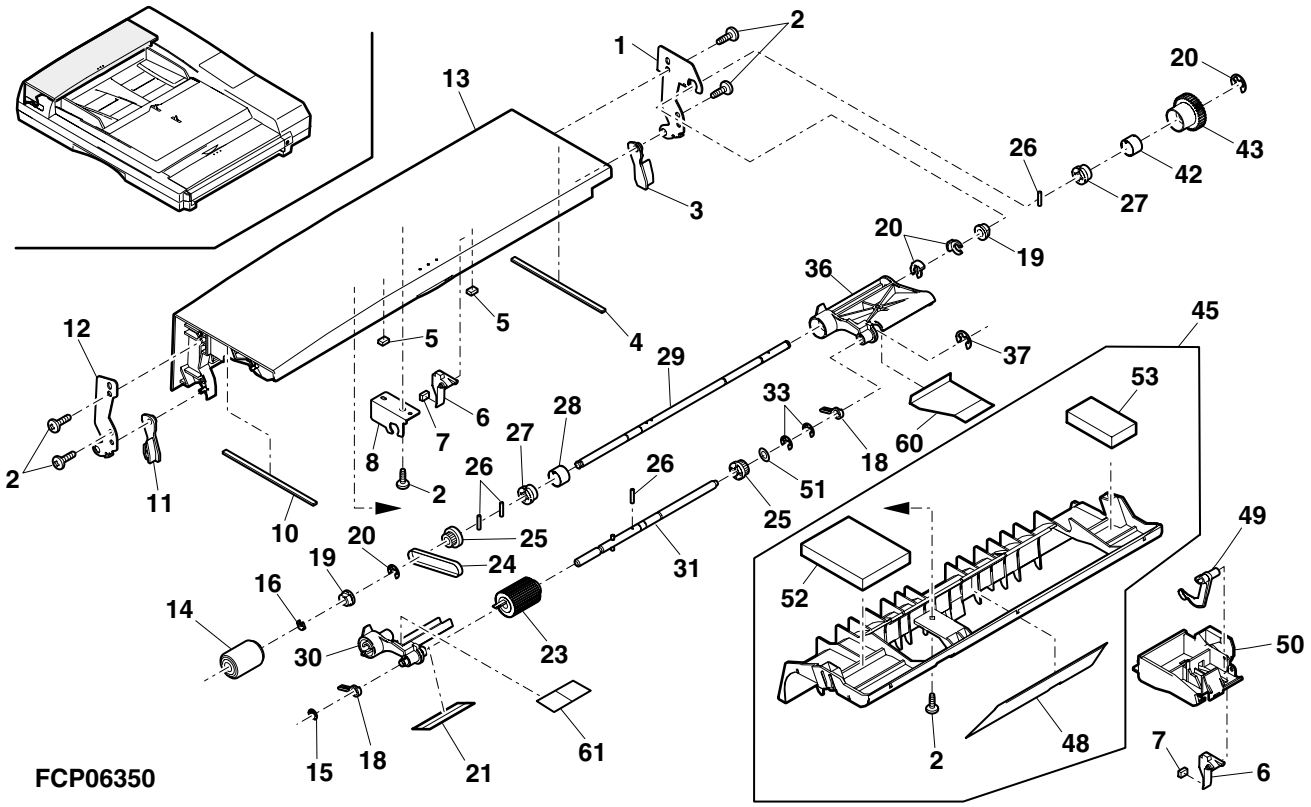

41 RADF 給紙部 2 (RADF Paper feeding section 2)[AR-C260F/AR-C260FP]

NO.	PARTS CODE	PRICE RANK		NEW MARK	PART RANK	DESCRIPTION	
		Ex.	Ja.				
1	0CW2269P010//	AS	EQ	N	C	Transport guide	搬送ｶﾞｲﾄﾞ
2	0CW2269P011//	AQ	EQ	N	C	Resist guide U	ﾚｼﾞｶﾞｲﾄﾞ U
3	0CW2269K094C/	AZ	FX	N	B	Separation pad unit	分離ﾊﾟｯﾄﾕﾆｯﾄ
4	0CW2269P065//	AE	DS	N	C	Separation spring cover	分離ﾊﾞﾈｶﾊﾞｰ
5	0CW2269P349B/	AD	DJ	N	C	Separation spring	分離ﾊﾞﾈ
6	0CW2185P357A/	AA	DJ		C	Screw(M3×8)	ﾋﾞｽ
7	0CW2269P066//	AF	DS	N	C	Separation spring holder	分離ﾊﾞﾈﾎﾙﾀﾞｰ
8	0CW2268P071//	AE	DJ	N	C	Collar	ﾃｲｹﾞﾝｺﾛ
9	0CW2269K047//	AR	EQ	N	B	Front plate rubber + cover	ﾏｴｻﾊﾞｷｺﾞﾑ + ｶﾊﾞｰ
10	0CW2269P320//	AE	DS	N	B	Lower cushion	ﾋﾟｯｸ下ｽﾎﾟﾝｼﾞ
11	0CW2269P311//	AG	DX	N	B	Lower moquette	ﾋﾟｯｸ下ﾓｹｯﾄ
12	0CW030080FNWS	AA	DJ		C	Screw(M3×8)	ﾋﾞｽ
13	0CW2268K041A/	AG	DX	N	C	Fulcrum bracket unit R	ｼﾃﾝﾌﾞﾗｹｯﾄｶｼﾒﾕﾆｯﾄ R
14	0CW2164P330A/	AB	DJ		C	Screw(M3×6)	ﾋﾞｽ
15	0CW2247P326A/	AF	DS	N	C	Bearing MF	ｼﾞｸｳｹ MF
16	0CW2268P354//	AG	DX	N	C	Resist spring	ﾚｼﾞｽﾄｽﾌﾟﾘﾝｸﾞ
17	0CWER050SKP//	AA	DD	N	C	E-ring 5	E ﾘﾝｸﾞ 5
18	0CWNSBRG00019	AQ	EQ	N	C	Bearing(ϕ8)	ﾍﾞｱﾘﾝｸﾞ
19	0CW2252P620C/	AD	DJ	N	C	Clip 4	ｸﾘｯﾌﾟ 4
20	0CWER070SKP//	AA	DD	N	C	E-ring 7	E ﾘﾝｸﾞ 7
21	0CW2268P073//	AD	DJ	N	C	Grar	ｷﾞﾔ
22	0CW2254P494A/	AB	DJ	N	C	Screw(M4×8)	ﾋﾞｽ
23	0CW2214P455C/	AE	DS	N	C	Plate spring	ﾛｯｸｲﾀﾊﾞﾈ
24	0CW030060FZTP	AA	DD		C	Screw(M3×6)	ﾋﾞｽ
25	0CW2269P324//	AE	DS	N	C	Empty earth sheet	ｴﾝﾌﾟﾃｨｰｱｰｽｼｰﾙ
26	0CW2269P334//	AY	FQ	N	B	Resist roller	ﾚｼﾞｽﾄﾛｰﾗｰ
27	0CW2240P835A/	AT	EZ	N	B	Reverse sensor	反射ｾﾝｻｰ
28	0CW030080FZWS	AA	DD		C	Screw	ﾋﾞｽ
29	0CW040060FNBB	AB	DJ		C	Screw(M4×6)	ﾋﾞｽ
30	0CW2269P115//	AL	EB	N	C	Resist sensor bracket	ﾚｼﾞｽﾄｾﾝｻｰﾌﾞﾗｹｯﾄ
31	0CW2269P149//	AE	DJ	N	C	Sensor bracket	ｴﾝﾌﾟﾃｨｾﾝｻｰﾌﾞﾗｹｯﾄ
32	0CWE314000619	AH	DX		B	Photo interrupter	ﾌｫﾄｲﾝﾀﾗﾌﾟﾀｰ
33	0CW2269P109//	AT	EZ	N	C	Resist guide L	ﾚｼﾞｶﾞｲﾄﾞ L
35	0CW2269P332//	AR	EQ	N	C	Discharge brush R	給紙除電ﾌﾞﾗｼ R
37	0CW2269K042B/	AG	DX	N	C	Sensor seal unit	反射ｾﾝｻｰｼｰﾙﾕﾆｯﾄ
39	0CW2269P331//	AT	EZ	N	C	Discharge brush F	給紙除電ﾌﾞﾗｼ F
40	0CWPW080025//	AB	DJ	N	C	Poly slider	ﾎﾟﾘｽﾗｲﾀﾞｰ
41	0CW2269P315//	AD	DJ	N	C	Spring	ﾚｼﾞﾛｰﾗｽﾗｽﾄﾊﾞﾈ
42	0CW2268K040B/	AG	DX	N	C	Fulcrum bracket unit F	支点ﾌﾞﾗｹｯﾄｶｼﾒﾕﾆｯﾄ F
43	0CW2254P058A/	AE	DJ	N	C	Sensor lever	ｵｰﾌﾟﾝｾﾝｻｰﾚﾊﾞｰ
44	0CW2254P338A/	AC	DJ	N	C	Spring holder SP	ﾊﾞﾈﾎﾙﾀﾞｰ SP
45	0CW030060FZSW	AA	DD		C	Screw	ﾋﾞｽ
46	0CW2269P038//	AE	DS	N	C	Sensor holder	ｵｰﾌﾟﾝｾﾝｻｰﾎﾙﾀﾞｰ
47	0CW2268P336//	AD	DJ	N	C	Resist guide sheet	ﾚｼﾞｽﾄ案内ﾏｲﾗｰ
48	0CW2268P303//	BA	FX	N	C	Resist assist roller	ﾚｼﾞ従動ﾛｰﾗ
50	0CW2268P401//	AG	DS	N	C	Harness guide 1	ﾊｰﾈｽｶﾞｲﾄﾞ 1
52	0CW2269P451A/	AF	DS	N	C	Separation sheet	分離ﾏｲﾗｰ
53	0CW2269P453A/	AE	DJ	N	C	Separation sheet	分離ﾏｲﾗｰ
54	0CW2269P455A/	AQ	EQ	N	C	Sub pad	ｻﾌﾞﾊﾟｯﾄﾞ
55	0CW2269P012A/	AM	EG	N	C	Lower frame	下ﾌﾚｰﾑ
56	0CW030060FZWS	AA	DD		C	Screw	ﾋﾞｽ

41 RADF 給紙部 2 (RADF Paper feeding section 2)[AR-C260F/AR-C260FP]

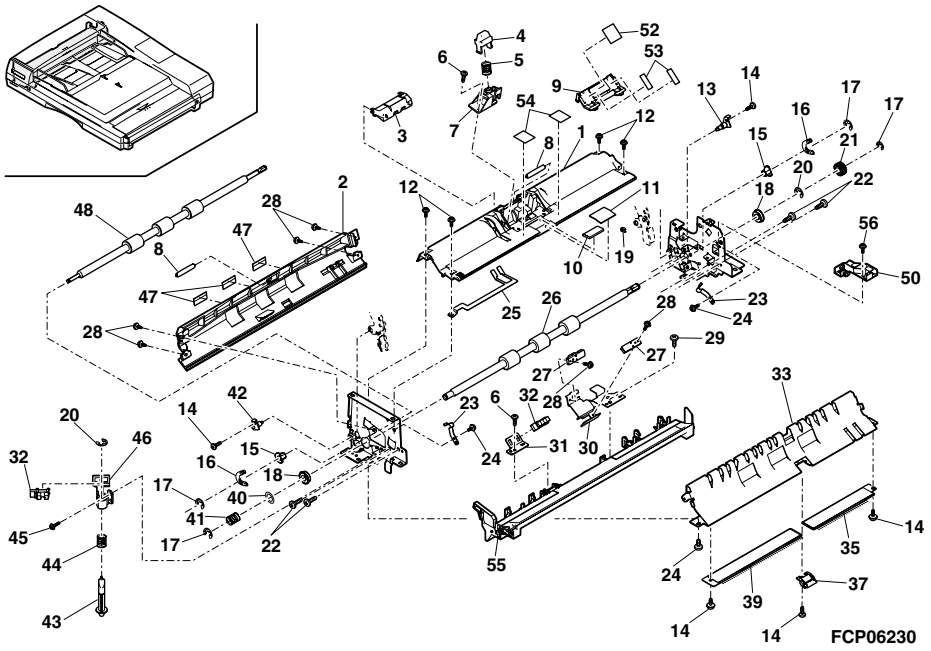

42 RADF 給紙駆動部 (RADF Paper feeding drive section)[AR-C260F/AR-C260FP]

NO.	PARTS CODE	PRICE RANK		NEW MARK	PART RANK	DESCRIPTION	
		Ex.	Ja.				
1	0CW2269P055//	AE	DS	N	C	Sensor lever	ｵｰﾌﾟﾝｾﾝｻﾚﾊﾞｰ
2	0CWE314000619	AH	DX		B	Photo interrupter	ﾌｫﾄｲﾝﾀﾗﾌﾟﾀｰ
3	0CW030080FZWS	AA	DD		C	Screw	ﾋﾞｽ
4	0CW2268P083//	AF	DS	N	C	Sensor holder	ｵｰﾌﾟﾝｾﾝｻﾎﾙﾀﾞｰ
5	0CW2164P340A/	AA	DD		C	Screw(M4×7)	ﾋﾞｽ
6	0CW040080FZTP	AA	DD		C	Screw(M4×8)	ﾋﾞｽ
8	0CW2269K013//	AU	EZ	N	C	Paper feeding motor bracket unit	給紙ﾓｰﾀｰﾌﾞﾗｹｯﾄﾕﾆｯﾄ
9	0CWNSBRG00016	AT	EZ		C	Braring(φ6)	ﾍﾞｱﾘﾝｸﾞ
11	0CW040080FZWS	AA	DD		C	Screw	ﾋﾞｽ
12	0CW2269K241B/	BL	HL	N	B	Paper feedig motor	給紙ﾓｰﾀｰ
13	0CW2269P171//	AL	EB	N	C	Switch spring	ｽｲｯﾁｲﾀﾊﾞﾈ
14	0CWE120001648	AP	EQ	N	B	Microswitch	ﾏｲｸﾛｽｲｯﾁ
15	0CW023100FZWS	AB	DJ	N	C	Screw(M2.3×10)	ﾋﾞｽ
17	0CW2268P064//	AG	DX	N	C	Pulley	ﾌﾟｰﾘｰ
18	0CW2268P065//	AG	DX	N	C	Gear	ｷﾞﾔ
19	0CWER070SKP//	AA	DD	N	C	E-ring 7	E ﾘﾝｸﾞ 7
20	0CWER050SKP//	AA	DD	N	C	E-ring 5	E ﾘﾝｸﾞ 5
21	0CW2268P217//	AK	EB	N	C	Paper feeding gear shaft	給紙ｷﾞﾔｼｬﾌﾄ
22	0CWNSBLT00277	AP	EQ	N	C	Timing belt	ﾀｲﾐﾝｸﾞﾍﾞﾙﾄ
23	0CW2269P057//	AE	DS	N	C	Pulley	ﾌﾟｰﾘｰ
24	0CW2268P344//	AP	EQ	N	C	Clutch	連結ﾜﾝｳｪｰｸﾗｯﾁ
25	0CW2268P066//	AH	DX	N	C	Gear	ｷﾞﾔ
26	0CWHP02010SCH	AC	DJ	N	C	Pin(2×10)	ﾍｲｺｳﾋﾟﾝ
30	0CW2269P056//	AD	DJ	N	C	Paper feeding tension collar	給紙ﾃﾝｼｮﾝｺﾛ
31	0CW2078P023B/	AC	DJ		C	Screw(M3)	ﾋﾞｽ
32	0CW2269K011//	AH	DX	N	C	Paper feeding tension bracket unit	給紙ﾃﾝｼｮﾝﾌﾞﾗｹｯﾄﾕﾆｯﾄ
33	0CW2268P335//	AD	DJ	N	C	Paper feeding tension spring	給紙ﾃﾝｼｮﾝﾊﾞﾈ

42 RADF 給紙駆動部 (RADF Paper feeding drive section)[AR-C260F/AR-C260FP]

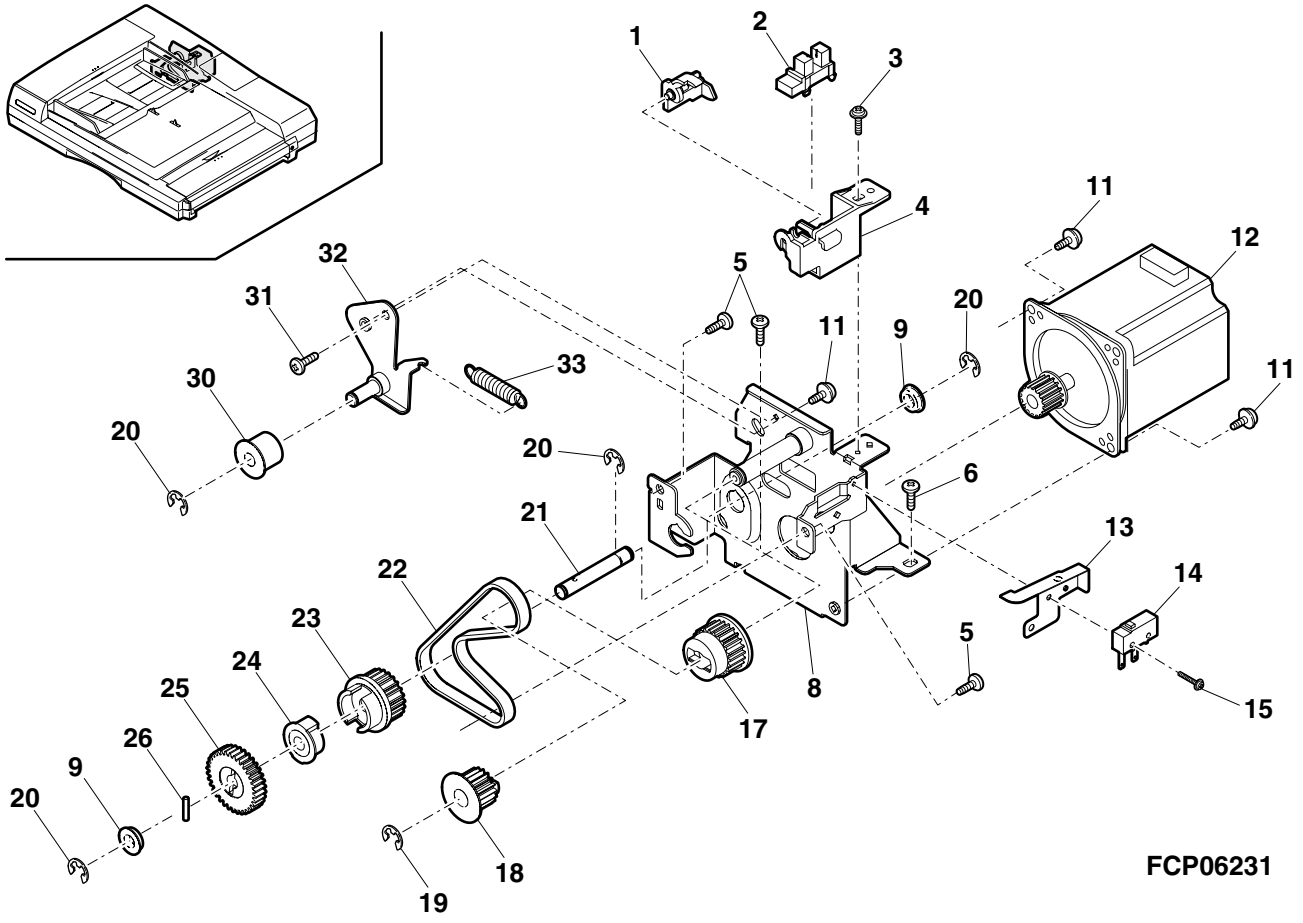

43 RADF 排紙部 1 (RADF Delivery section 1)[AR-C260F/AR-C260FP]

NO.	PARTS CODE	PRICE RANK		NEW MARK	PART RANK	DESCRIPTION	
		Ex.	Ja.				
1	0CW2269P354//	AL	EB	N	C	Sound proof cushion	反転防音ｽﾎﾟﾝｼﾞ
2	0CW2269P306//	AQ	EQ	N	C	Discharge brush	反転ﾍﾞﾙﾄ口除電ﾌﾞﾗｼ
4	0CW2269P336//	AG	DX	N	C	Fixing sheet	ｵｻｴﾏｲﾗｰ
6	0CWE4500011139	AC	DJ	N	C	Clamp	ｸﾗﾝﾌﾟ
8	0CWE4500011128	AC	DJ		C	Tielap	ﾀｲﾗｯﾌﾟ
9	0CWE3140006 19	AH	DX		B	Photo interrupter	ﾌｫﾄｲﾝﾀﾗﾌﾟﾀｰ
10	0CW2269P017//	AE	DJ	N	C	Reverse lever	反転ｵｰﾌﾟﾝﾚﾊﾞｰ
11	0CW4062Q304B/	AC	DJ	N	C	Screw(M3)	ﾋﾞｽ
12	0CW2164P330A/	AB	DJ		C	Screw(M3×6)	ﾋﾞｽ
13	0CW2214P455C/	AE	DS	N	C	Plate spring	ﾛｯｸｲﾀﾊﾞﾈ
14	0CW030080FZBi	AA	DJ		C	Screw(M3×8)	ﾋﾞｽ
15	0CWNSBRG00019	AQ	EQ	N	C	Bearing(φ8)	ﾍﾞｱﾘﾝｸﾞ
16	0CW2268P352//	AD	DJ	N	C	Reverse spring	反転ｽﾗｽﾄﾊﾞﾈ
17	0CW2268P078//	AE	DS	N	C	Pulley	ﾌﾟｰﾘｰ
18	0CWER050SKP//	AA	DD	N	C	E-ring 5	E ﾘﾝｸﾞ 5
19	0CW2269P333//	BB	GD	N	B	Reverse roller	反転ﾛｰﾗｰ
20	0CW3085P334A/	AC	DJ	N	C	Screw(M3×4)	ﾋﾞｽ
21	0CW2269P105//	AH	DX	N	C	Reverse sensor earth	反転ｾﾝｻｰｱｰｽ
22	0CW2269P106//	AF	DS	N	C	Reverse earth	反転ｱｰｽ
23	0CW2269P015//	AG	DS	N	C	Reverse roller guide cover	反転ﾛｰﾗｰｶﾞｲﾄﾞｶﾊﾞｰ
24	0CW2269P304//	AD	DJ	N	C	Reverse sensor sheet	反転ｾﾝｻｰﾏｲﾗｰ
25	0CW2240P835A/	AT	EZ	N	B	Reverse sensor	反射ｾﾝｻｰ
26	0CW2269P014C/	AW	FG	N	C	Reverse roller guide	反転ﾛｰﾗｰｶﾞｲﾄﾞ
27	0CW2078P086B/	AB	DD		C	Screw(M3)	ﾋﾞｽ
28	0CW2269P340//	AF	DS	N	C	Reverse sensor harness sheet	反転ｾﾝｻｰﾊｰﾈｽﾏｲﾗｰ
29	0CW2269P359//	AN	EG	N	C	Reverse exit sheet	反転出口ﾏｲﾗｰ
30	0CW2269P358//	AD	DJ	N	C	Sheet	ｽｸｲｱｹﾞﾏｲﾗｰ
31	0CW030060FZTP	AA	DD		C	Screw(M3×6)	ﾋﾞｽ
32	0CW2129P188A/	AD	DJ	N	C	Clip 3	ｸﾘｯﾌﾟ 3
33	0CW2269P107//	AK	DX	N	C	Reverse roller guide bracket	反転ﾛｰﾗｰｶﾞｲﾄﾞﾌﾞﾗｹｯﾄ
34	0CW2269P016//	AD	DJ	N	C	Delivery lever	排紙ﾚﾊﾞｰ
35	0CW2269P207//	AF	DS	N	C	Delivery sensor lever shaft	排紙ｾﾝｻｰﾚﾊﾞｰｼｬﾌﾄ
37	0CW2078P652B/	AE	DS	N	C	Bearing 8	ｼﾞｸｳｹ 8
38	0CWER070SKP//	AA	DD	N	C	E-ring 7	E ﾘﾝｸﾞ 7
39	0CW2269P059//	AE	DJ	N	C	Reverse solenoid lever	反転ｿﾚﾉｲﾄﾞﾚﾊﾞｰ
40	0CW2252P620C/	AD	DJ	N	C	Clip 4	ｸﾘｯﾌﾟ 4
41	0CW2269P308//	AD	DJ	N	C	Solenoid spring	ｿﾚﾉｲﾄﾞﾊﾞﾈ
44	0CW2269P142//	AF	DS	N	C	Solenoid bracket	反転ｿﾚﾉｲﾄﾞﾌﾞﾗｹｯﾄ
45	0CW030040FZWS	AA	DD		C	Screw(M3×4)	ﾋﾞｽ
47	0CW2269P339//	AD	DJ	N	C	Solenoid lever cushion	ｿﾚﾉｲﾄﾞﾚﾊﾞｰｽﾎﾟﾝｼﾞ
49	0CW2185P357A/	AA	DJ		C	Screw(M3×8)	ﾋﾞｽ
50	0CW2269P389//	AD	DJ	N	C	Revers sensor cushion	反転ｾﾝｻｰｵｻｴｽﾎﾟﾝｼﾞ
51	0CW2269P440//	AT	EZ	N	C	Solenoid + Harness	ｿﾚﾉｲﾄﾞ + ﾊｰﾈｽ
52	0CW2269P013//	AQ	EQ	N	C	Reverse guide	反転ｶﾞｲﾄﾞ

43 RADF 排紙部 1 (RADF Delivery section 1)[AR-C260F/AR-C260FP]

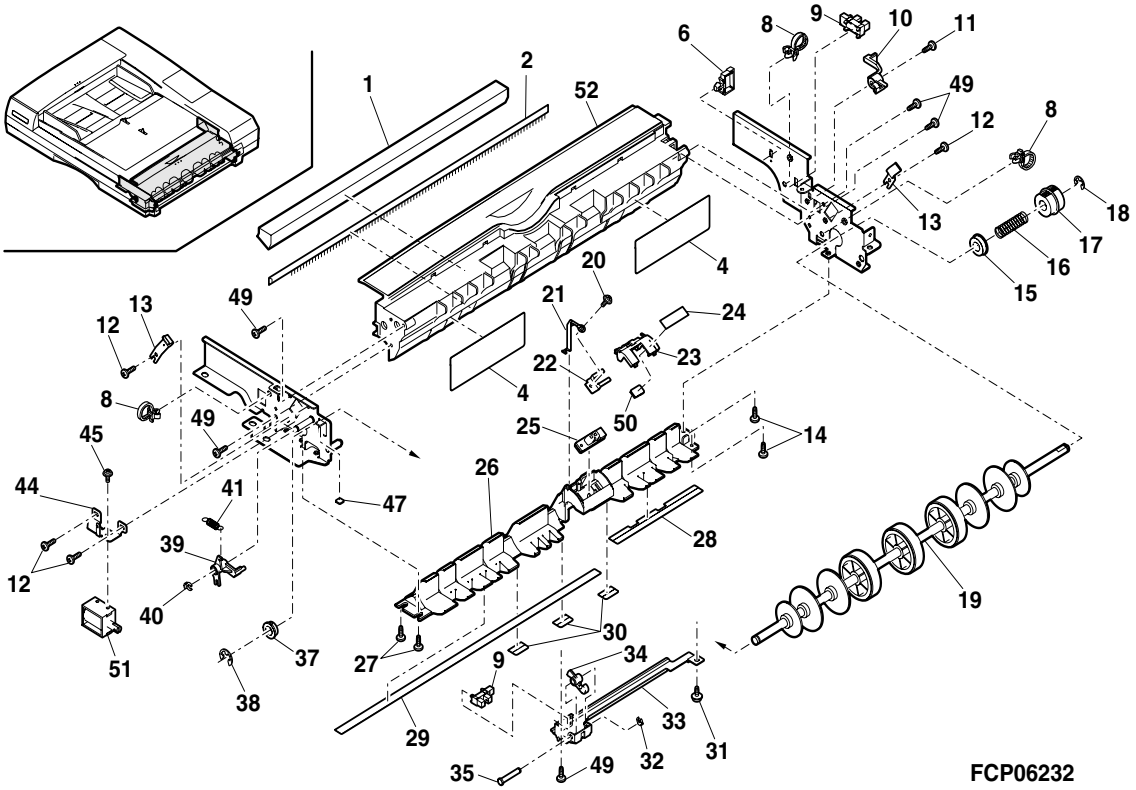

44 RADF 排紙部 2 (RADF Delivery section 2)[AR-C260F/AR-C260FP]

NO.	PARTS CODE	PRICE RANK		NEW MARK	PART RANK	DESCRIPTION	
		Ex.	Ja.				
1	0CW4048P300A／	AC	DJ	N	C	Screw(M4×5)	ﾋﾞｽ
2	0CW2269P111／／	AN	EG	N	C	Reverse motor bracket	反転ﾓｰﾀｰﾌﾞﾗｹｯﾄ
3	0CW2268P360／／	AD	DJ	N	C	Reverse tension spring	反転ﾃﾝｼｮﾝﾊﾞﾈ
4	0CW2269P160A／	AG	DX	N	C	Reverse motor adjust bracket	反転ﾓｰﾀｰ調整ﾌﾞﾗｹｯﾄ
5	0CW040060FZWS	AA	DD		C	Screw(M4×6)	ﾋﾞｽ
6	0CW2268K522A／	BL	HL	N	B	Motor	ﾓｰﾀｰ
7	0CW2269P305／／	AQ	EQ	N	C	Discharge brush	排紙口除電ﾌﾞﾗｼ
8	0CW2269P006／／	AW	FG	N	C	Reverse cover	反転ｶﾊﾞｰ
9	0CW2269P369／／	AE	DS	N	C	Reverse cover seal cushion R	反転ｶﾊﾞｰｼｰﾙｽﾎﾟﾝｼﾞ R
10	0CW2269P368／／	AF	DS	N	C	Reverse cover seal cushion F	反転ｶﾊﾞｰｼｰﾙｽﾎﾟﾝｼﾞ F
11	0CW2269P338／／	AD	DJ	N	C	Reverse sensor cover seal	反射ｾﾝｻｰｼｰﾙ
12	0CW2269P005／／	AP	EQ	N	C	Reverse upper guide	反転上ｶﾞｲﾄﾞ
13	0CW2269P335／／	AD	DJ	N	C	Reverse collar front sheet	反転ｺﾛ前ﾏｲﾗｰ
14	0CW2269P128／／	AE	DS	N	C	Reverse plate spring U	反転ｲﾀﾊﾞﾈU
15	0CW2268P005A／	AD	DJ	N	C	Reverse collar	反転ｺﾛ
16	0CW2185P357A／	AA	DJ		C	Screw(M3×8)	ﾋﾞｽ
17	0CW2269P303／／	AY	FQ	N	C	Reverse flapper	反転ﾌﾗｯﾊﾟｰ
18	0CW2269P104／／	AF	DS	N	C	Reverse bracket R	反転ｼﾃﾝﾌﾞﾗｹｯﾄ R
19	0CW2254P494A／	AB	DJ	N	C	Screw(M4×8)	ﾋﾞｽ
20	0CW2269P112／／	AF	DS	N	C	Reverse bracket F	反転ｼﾃﾝﾌﾞﾗｹｯﾄ F
21	0CW2269P060／／	AE	DJ	N	C	Reverse flapper lever	反転ﾌﾗｯﾊﾟｰﾚﾊﾞｰ
22	0CWER040SKP／／	AB	DD	N	C	E-ring 4	E ﾘﾝｸﾞ 4
24	0CW2269P110／／	AP	EQ	N	C	Discharge bracket	排紙ﾌﾞﾗｹｯﾄ
25	0CW030060FZTP	AA	DD		C	Screw(M3×6)	ﾋﾞｽ
26	0CW2269P018／／	AQ	EQ	N	C	Discharge guide	排紙ｶﾞｲﾄﾞ
27	0CW2269P309／／	AC	DJ	N	C	Discharge collar spring	排紙ｺﾛﾊﾞﾈ
28	0CW2269P211／／	AG	DX	N	C	Discharge collar shaft	排紙ｺﾛｼｬﾌﾄ
29	0CW2269P357／／	AG	DX	N	C	Discharge collar	排紙ｺﾛ
30	0CW2269P351／／	AC	DJ	N	C	Flapper cushion	ﾌﾗｯﾊﾟｰｽﾎﾟﾝｼﾞ
31	0CW2269P337／／	AE	DJ	N	C	Discharge collar front sheet	排紙ｺﾛ前ﾏｲﾗｰ
32	0CW2269P307／／	AN	EQ	N	C	Sheet	ｽｸｲｱｹﾞﾏｲﾗｰ
33	0CW2269K016／／	AF	DS	N	C	Paper feeding bracket R unit	給紙ｼﾃﾝﾌﾞﾗｹｯﾄ R ﾕﾆｯﾄ
34	0CW3085P334A／	AC	DJ	N	C	Screw(M3×4)	ﾋﾞｽ
35	0CW040060FZBP	AB	DJ		C	Screw	ﾋﾞｽ
36	0CWNSBLT00278	AL	EB	N	C	Timing belt	ﾀｲﾐﾝｸﾞﾍﾞﾙﾄ
37	0CW2269P399A／	AE	DS	N	C	Sheet	ﾏｲﾗｰ
40	0CW2260P457／／	AP	EQ	N	C	Discharge mylar S	除電ﾏｲﾗｰ S
41	0CW2260P458／／	AN	EQ	N	C	Discharge mylar C	除電ﾏｲﾗｰ C

44 RADF 排紙部 2 (RADF Delivery section 2)[AR-C260F/AR-C260FP]

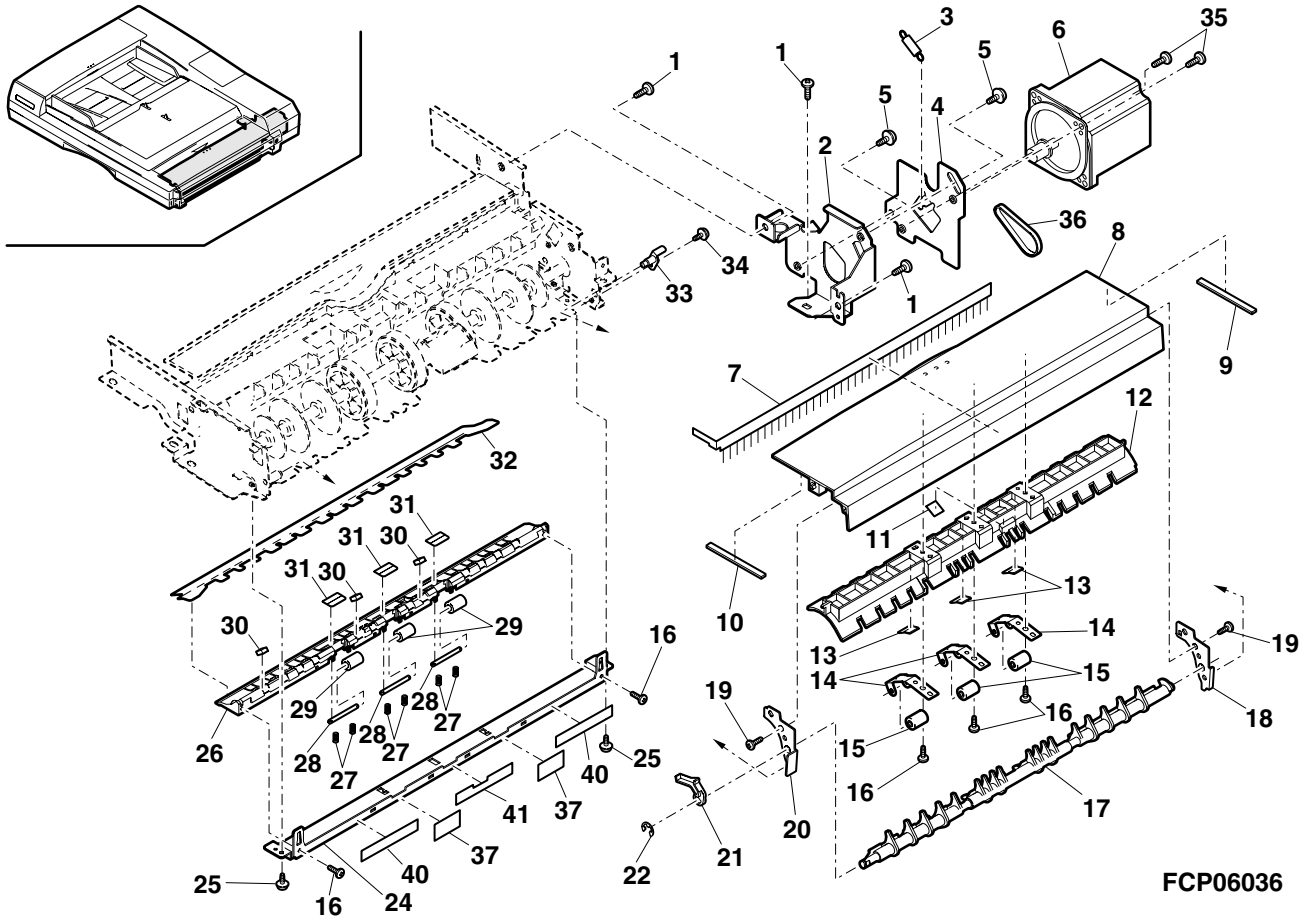

45 RADF 搬送部 (RADF Transport section)[AR-C260F/AR-C260FP]

NO.	PARTS CODE	PRICE RANK		NEW MARK	PART RANK	DESCRIPTION	
		Ex.	Ja.				
1	0CW2269P327//	BA	FX	N	C	Belt roller L	ﾍﾞﾙﾄﾛｰﾗ左
2	0CW2164P142A/	AE	DS		C	Belt roller spring holder	ﾍﾞﾙﾄﾛｰﾗﾊﾞﾈｳｹ
3	0CW2205P360A/	AD	DJ	N	C	Roller spring	ｵﾄｼﾛｰﾗｰﾊﾞﾈ
4	0CW2269P029//	AG	DS	N	C	Roller holder F	ｵﾄｼﾛｰﾗｰﾎﾙﾀﾞｰF
5	0CW2269P025//	AG	DS	N	C	Roller holder R	ｵﾄｼﾛｰﾗｰﾎﾙﾀﾞｰR
6	0CW030060FZBP	AA	DD		C	Screw	ﾋﾞｽ
7	0CW2269P343//	AZ	FQ	N	C	Roller	ｵﾄｼﾛｰﾗｰ
8	0CWNSBRG00019	AQ	EQ	N	C	Bearing(φ8)	ﾍﾞｱﾘﾝｸﾞ
9	0CW2269P099A/	AD	DJ	N	C	Pulley	ﾌﾟｰﾘｰ
10	0CWER070SKP//	AA	DD	N	C	E-ring 7	E ﾘﾝｸﾞ 7
11	0CW2269P120//	AP	EQ	N	C	DF side plate R	DF ｿｸﾊﾞﾝR
12	0CW2269P119//	AQ	EQ	N	C	DF side plate F	DF ｿｸﾊﾞﾝF
13	0CW040080FNBi	AA	DD		C	Screw	ﾋﾞｽ
14	0CW2198P374A/	AC	DJ	N	C	Washer(M4)	ﾜｯｼｬｰ
15	0CW2214P044A/	AF	DS	N	C	Belt guide	ﾍﾞﾙﾄｶﾞｲﾄﾞ
16	0CW2205P147A/	AG	DX	N	C	Roller plate spring	ｵｻｴﾛｰﾗｰｲﾀﾊﾞﾈ
17	0CW2205P025A/	AD	DJ	N	C	Spacer	ｱｯｾﾂｽﾍﾞｰｻｰ
18	0CW2268P059//	AE	DJ	N	C	Fixing holder	ｵｻｴﾎﾙﾀﾞｰ
19	0CW2205P351A/	AU	EZ	N	C	Belt roller	ﾍﾞﾙﾄｵｻｴﾛｰﾗｰ
20	0CW2269P123//	AH	DX	N	C	Belt tension bracket F	ﾍﾞﾙﾄﾃﾝｼｮﾝﾌﾞﾗｹｯﾄ F
21	0CW2078P023B/	AC	DJ		C	Screw(M3)	ﾋﾞｽ
22	0CW040060FNBi	AA	DD		C	Screw(M4×6)	ﾋﾞｽ
23	0CW2269P026//	AF	DS	N	C	Roller holder 1-F	ｵｻｴﾛｰﾗｰﾎﾙﾀﾞｰ1-F
24	0CW2269P022//	AF	DS	N	C	Roller holder 1-R	ｵｻｴﾛｰﾗｰﾎﾙﾀﾞｰ1-R
25	0CW2268P110//	AH	DX	N	C	Transport tension bracket	搬送ﾃﾝｼｮﾝﾌﾞﾗｹｯﾄ
26	0CW2269P382//	AD	DJ	N	C	DF unit regulation cushion	DF ﾕﾆｯﾄ上下規制ﾊﾟｯﾄ
27	0CW2269P326//	AZ	FQ	N	C	Belt roller R	ﾍﾞﾙﾄﾛｰﾗｰ右
28	0CW2214P520B/	AU	EZ	N	C	Fixing holder	ｵｻｴﾎﾙﾀﾞｰ
29	0CW2078P086B/	AB	DD		C	Screw(M3)	ﾋﾞｽ
30	0CW030060FZWS	AA	DD		C	Screw	ﾋﾞｽ
31	0CW2268P146//	AP	EQ	N	C	Transport unit stay	搬送ﾕﾆｯﾄｽﾃｰ
33	0CW2269P176//	AE	DS	N	C	Collar plate spring	ｺﾛｲﾀﾊﾞﾈ
35	0CW2198P305B/	AH	DX	N	C	Collar H	ｵｻｴｺﾛ H
36	0CW2214P157B/	AK	DX	N	C	Collar plate spring L	ｵｻｴｺﾛｲﾀﾊﾞﾈ L
37	0CW2214P575A/	BR	LP	N	A	DF belt CGR	DF ﾍﾞﾙﾄ CGR
38	0CW030080FZWS	AA	DD		C	Screw	ﾋﾞｽ

45 RADF 搬送部 (RADF Transport section)[AR-C260F/AR-C260FP]

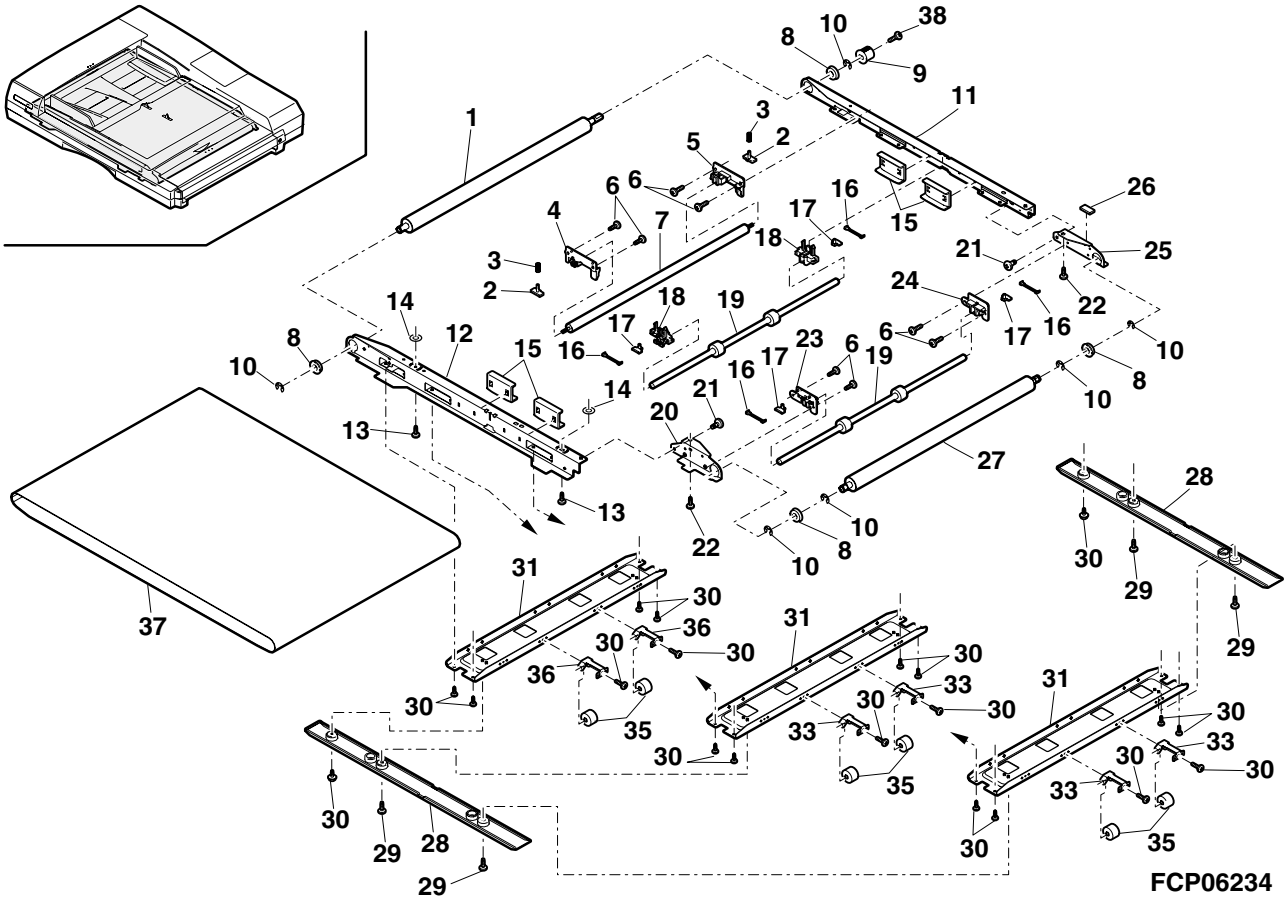

46 RADF 搬送駆動部 (RADF Transport drive section)[AR-C260F/AR-C260FP]

NO.	PARTS CODE	PRICE RANK		NEW MARK	PART RANK	DESCRIPTION	
		Ex.	Ja.				
1	0CW040080FZWS	AA	DD		C	Screw	ﾋﾞｽ
2	0CW2268P402//	AK	DX	N	C	Harness guide 2	ﾊｰﾈｽｶﾞｲﾄﾞ 2
3	0CW040080FZSW	AA	DD		C	Screw	ﾋﾞｽ
4	0CW2269K242B/	BM	HV	N	B	Motor	ﾓｰﾀｰ
5	0CW2269P363//	AD	DJ	N	C	Transport tension spring	搬送ﾃﾝｼｮﾝﾊﾞﾈ
7	0CW040060FZTP	AA	DD		C	Screw(M4×6)	ﾋﾞｽ
8	0CW2269P114//	AQ	EQ	N	C	Transport motor bracket	搬送ﾓｰﾀｰﾌﾞﾗｹｯﾄ
9	0CW4054P220D/	AB	DJ		C	Screw	ﾋﾞｽ
10	0CW2269K012//	AG	DX	N	C	Transport tension bracket unit	搬送ﾃﾝｼｮﾝﾌﾞﾗｹｯﾄﾕﾆｯﾄ
11	0CW2268P069//	AD	DJ	N	C	Tension collar	ﾃﾝｼｮﾝｺﾛ
12	0CW2268P076//	AD	DJ	N	C	Flange	ﾌﾗﾝｼﾞ
13	0CWER050SKP//	AA	DD	N	C	E-ring 5	E ﾘﾝｸﾞ 5

46 RADF 搬送駆動部 (RADF Transport drive section)[AR-C260F/AR-C260FP]

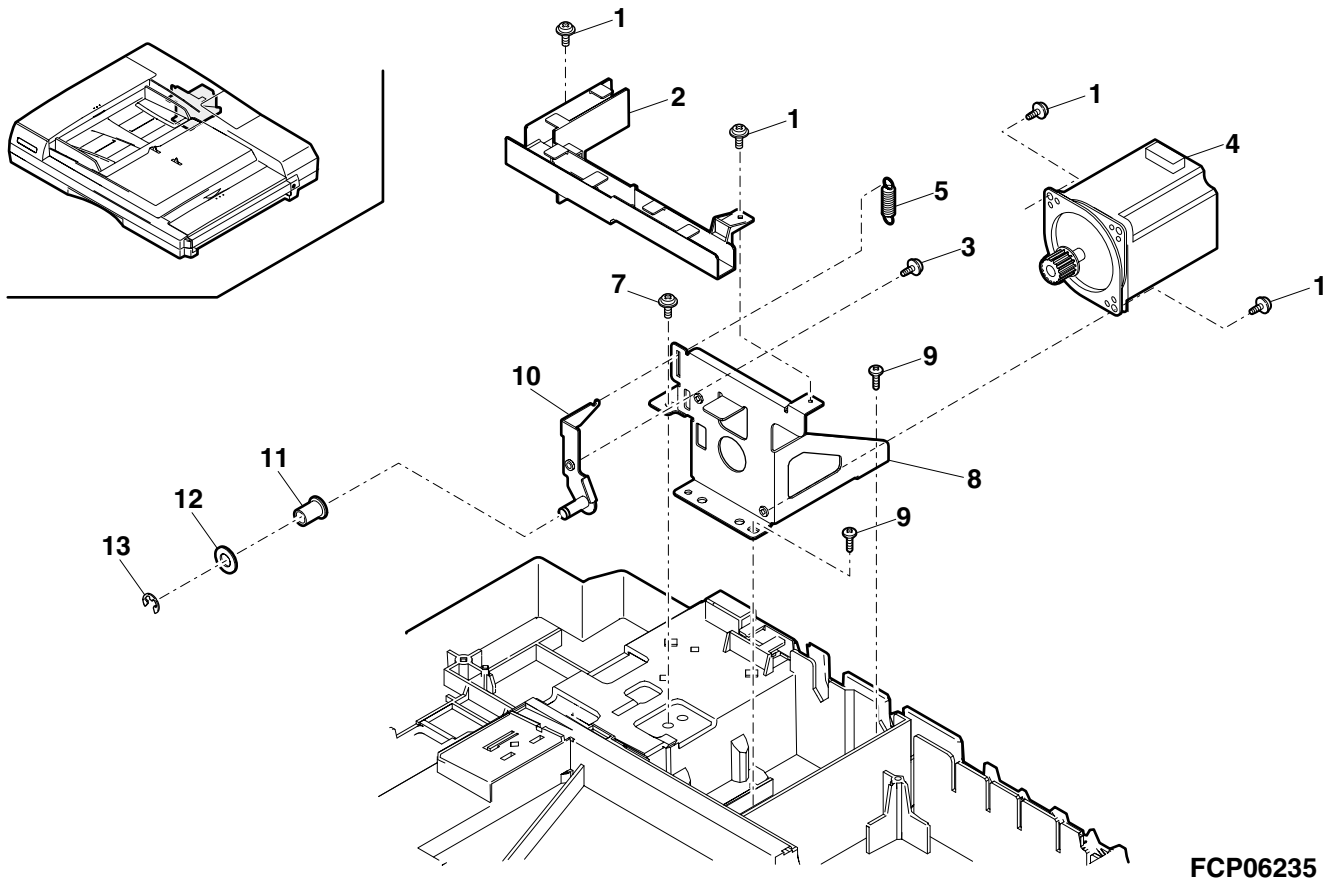

47 RADF 台板ユニット (RADF Base plate unit)[AR-C260F/AR-C260FP]

NO.	PARTS CODE	PRICE RANK		NEW MARK	PART RANK	DESCRIPTION	
		Ex.	Ja.				
1	0CW2214P116B/	AE	DJ	N	C	DF fixing plate	DF ｺﾃｲﾌﾟﾚｰﾄ
2	0CW2269P001//	BP	LP	N	D	Base	ﾍﾞｰｽ
3	0CW2269K202//	BZ	TF	N	E	Main PWB	ﾒｲﾝｷﾊﾞﾝ
4	0CW2269K240//	AX	FG	N	B	ROM (IC)	ROM (IC)
5	0CW040120FZiT	AB	DJ	N	C	Screw(M4×12)	ﾋﾞｽ
6	0CWE450000070	AB	DJ		C	Clamp	ｸﾗﾝﾌﾟ
7	0CWE450001139	AC	DJ	N	C	Clamp	ｸﾗﾝﾌﾟ
8	0CW2164P340A1	AB	DJ	N	C	Screw(M4×7)	ﾋﾞｽ
9	0CW2185P357A/	AA	DJ		C	Screw(M3×8)	ﾋﾞｽ
10	0CW2269P159//	AF	DS	N	C	Switch bracket	ｵｰﾌﾟﾝｽｲｯﾁﾌﾞﾗｹｯﾄ
11	0CW2269P172//	AK	DX	N	C	Switch plate spring 2	ｽｲｯﾁﾌﾟﾚｰﾄﾊﾞﾈ 2
12	0CWE120001648	AP	EQ	N	B	Microswitch	ﾏｲｸﾛｽｲｯﾁ
13	0CW023100FZWS	AB	DJ	N	C	Screw(M2.3×10)	ﾋﾞｽ
14	0CW2269P146//	AN	EG	N	C	Base stay R	ﾍﾞｰｽｽﾃｰ R
15	0CW2269P108//	AH	DX	N	C	Base F bracket	ﾍﾞｰｽ F ﾌﾞﾗｹｯﾄ
16	0CW4054P143B1	AB	DJ	N	C	Screw(M4×12)	ﾋﾞｽ
17	0CW2269K026G/	BD	GN	N	C	Hinge R unit	ﾋﾝｼﾞ R ﾕﾆｯﾄ
18	0CW2269P147//	AF	DS	N	C	Switch lever	ｵｰﾌﾟﾝｽｲｯﾁﾚﾊﾞｰ
19	0CW030060FZWS	AA	DD		C	Screw	ﾋﾞｽ
21	0CW040060FZTP	AA	DD		C	Screw(M4×6)	ﾋﾞｽ
22	0CW2269K001//	AH	DX	N	C	Transport unit fulcrum bracket R	搬送ﾕﾆｯﾄｼｼﾞﾌﾞﾗｹｯﾄ R
23	0CW2268P145//	AG	DS	N	C	Transport unit earth spring	搬送ﾕﾆｯﾄｱｰｽｲﾀﾊﾞﾈ
24	0CW030060FZTP	AA	DD		C	Screw(M3×6)	ﾋﾞｽ
25	0CW2269P116//	AH	DX	N	C	Magnet bracket	ﾏｸﾞﾈｯﾄﾌﾞﾗｹｯﾄ
26	0CW030040FZWS	AA	DD		C	Screw(M3×4)	ﾋﾞｽ
27	0CW2214P393A/	AG	DX	N	C	Magnet catch(13N)	ﾏｸﾞﾈｯﾄｷｬｯﾁ
28	0CW030060FZSW	AA	DD		C	Screw	ﾋﾞｽ
29	0CW2269K025F/	BD	GJ	N	C	Hinge L unit	ﾋﾝｼﾞ L ﾕﾆｯﾄ
31	0CW2269K008//	AK	EB	N	C	Transport unit fulcrum bracket L	搬送ﾕﾆｯﾄｼｼﾞﾌﾞﾗｹｯﾄ L
32	0CWER050SKP//	AA	DD	N	C	E-ring 5	E ﾘﾝｸﾞ 5
33	0CWNSBRG00016	AT	EZ		C	Braring(φ6)	ﾍﾞｱﾘﾝｸﾞ
34	0CW2269P221//	AH	DX	N	C	Transport drive shaft	搬送駆動ｼｬﾌﾄ
35	0CWNSBLT00282	AR	EQ	N	C	Belt	ﾍﾞﾙﾄ
36	0CW2269P020//	AD	DJ	N	C	Belt drive pulley	ﾍﾞﾙﾄ駆動ｱｲﾄﾞﾗﾌﾟｰﾘｰ
37	0CW2268P076//	AD	DJ	N	C	Flange	ﾌﾗﾝｼﾞ
38	0CW2269P393A1	AG	DX	N	C	Magnet catch(13N)	ﾏｸﾞﾈｯﾄｷｬｯﾁ
40	0CW2269P145//	AW	FG	N	C	Base stay L	ﾍﾞｰｽｽﾃｰ L
41	0CWNSBLT00281	AQ	EQ	N	C	Timing belt	ﾀｲﾐﾝｸﾞﾍﾞﾙﾄ

47 RADF 台板ユニット (RADF Base plate unit)[AR-C260F/AR-C260FP]

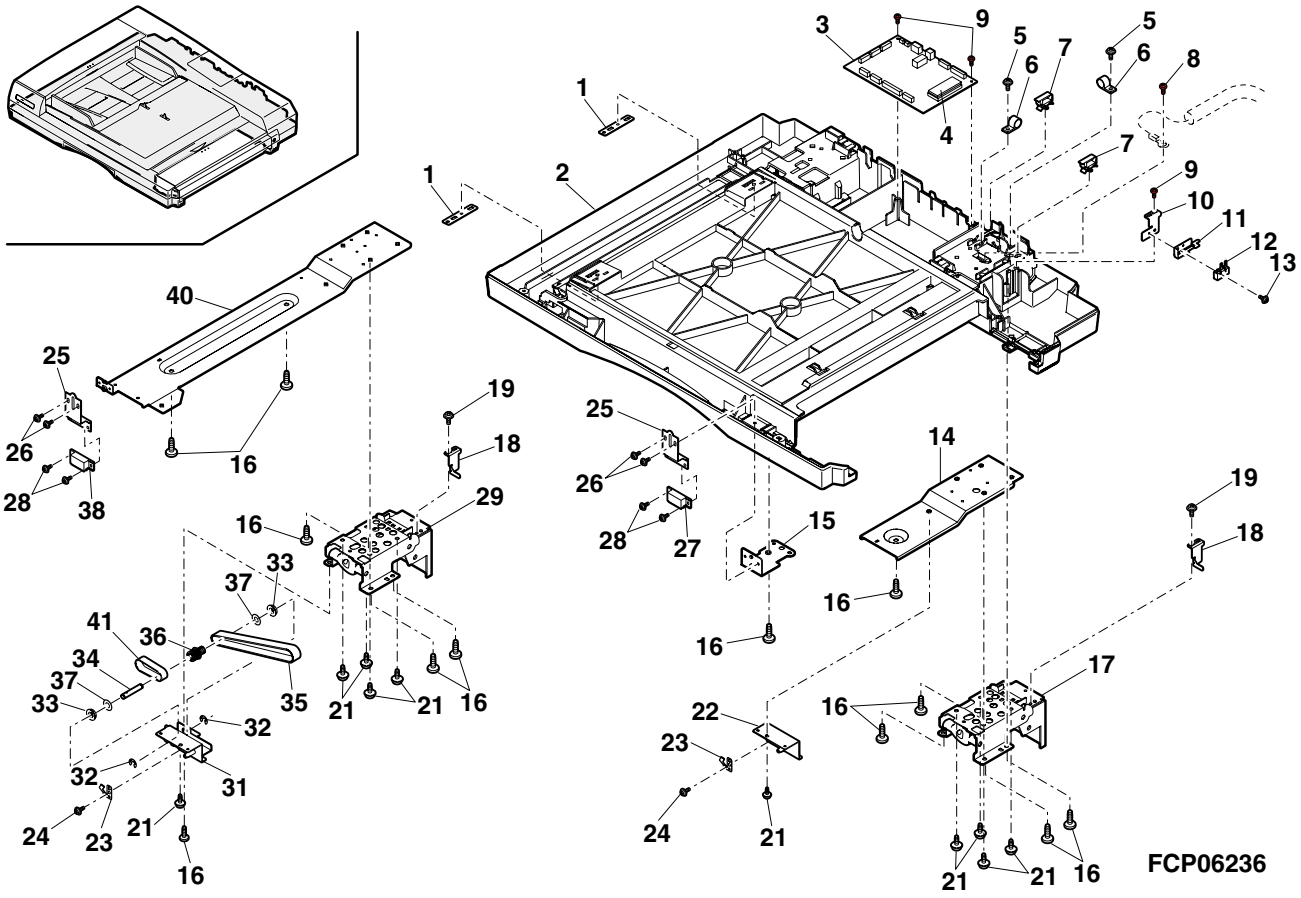

48 RADF 配線部 (RADF Wiring section)[AR-C260F/AR-C260FP]

NO.	PARTS CODE	PRICE RANK		NEW MARK	PART RANK	DESCRIPTION
		Ex.	Ja.			
1	0CW2269K225B/	AP	EQ	N	C	Harness ﾊｰﾈｽ
2	0CW2269K223B/	AL	EB	N	C	Harness ﾊｰﾈｽ
3	0CW2269K221//	AM	EG	N	C	Harness ﾊｰﾈｽ
6	0CW2269K230//	AK	EB	N	C	Harness ﾊｰﾈｽ
7	0CW2269K234B/	AY	FQ	N	C	Harness ﾊｰﾈｽ
8	0CW2269K243//	BL	HL	N	C	Harness ﾊｰﾈｽ
9	0CW2269K222B/	AG	DX	N	C	Harness ﾊｰﾈｽ
10	0CW2269K231//	AK	DX	N	C	Harness ﾊｰﾈｽ
11	0CW2269K224//	AL	EB	N	C	Harness ﾊｰﾈｽ

48 RADF 配線部 (RADF Wiring section)[AR-C260F/AR-C260FP]

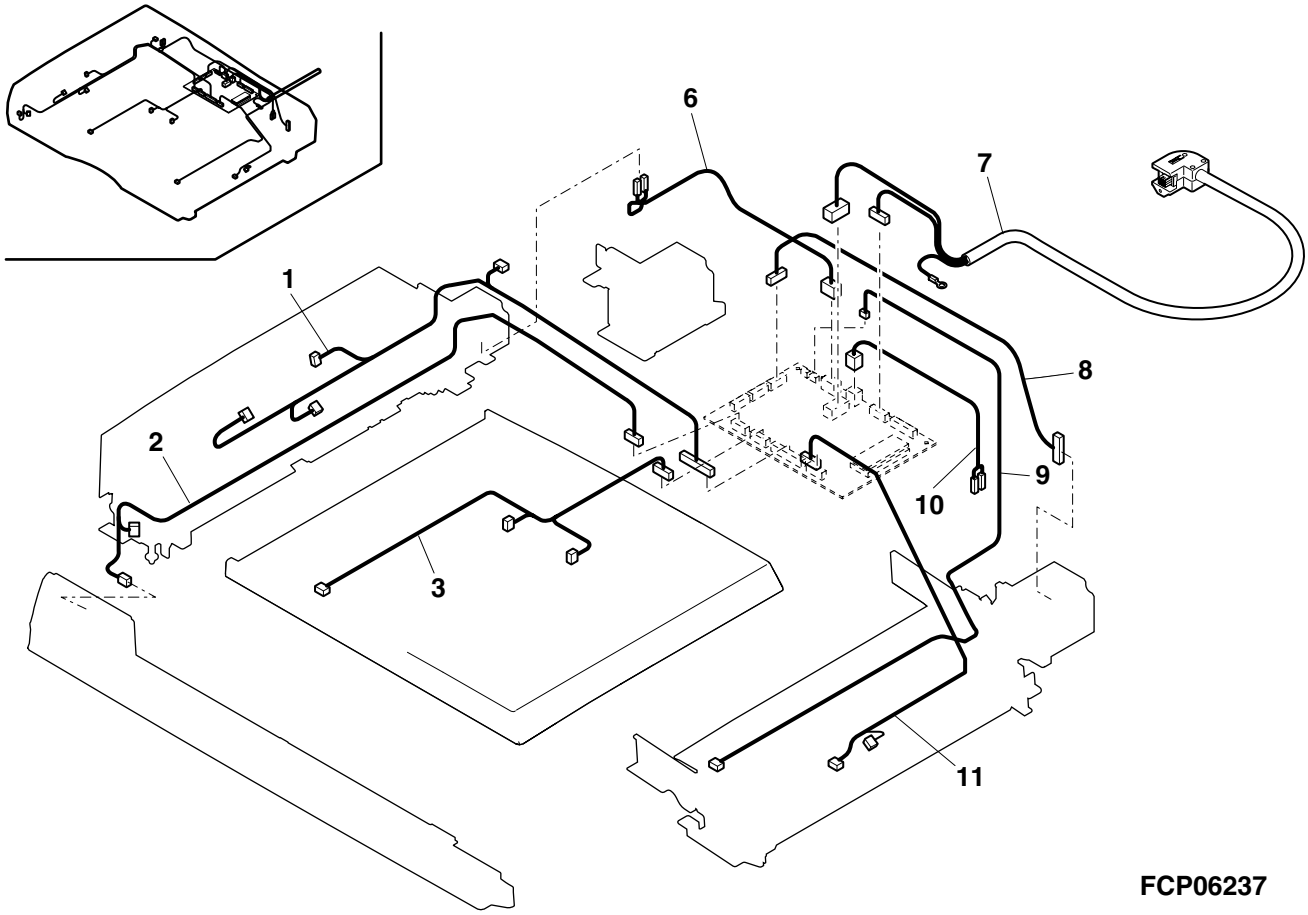

FCP06237

49 ﾓﾃﾞﾑｺﾝﾄﾛｰﾙ基板 (Modem control PWB)[AR-C260F/C260FP]

NO.	PARTS CODE	PRICE RANK		NEW MARK	PART RANK	DESCRIPTION	
		Ex.	Ja.				
1	QCNCM1069ACZZ	AD	DD		C	Connector(6pin)	[CN108] ｺﾈｸﾀｰ
2	QCNCM7014SC0B	AD	DJ		C	Connector(2pin)	[CN104] ｺﾈｸﾀｰ
3	QCNCM7014SC0C	AA	DD		C	Connector(3pin)	[CN105] ｺﾈｸﾀｰ
4	QCNCW1155FCZZ	AE	DJ		C	Connector(30pin)	[CN107] ｺﾈｸﾀｰ
5	QSOCN0082FCZZ	AP	EQ		C	Connector(26pin)	[CN101] ｺﾈｸﾀｰ
6	QSOCZ0073FCZZ	AL	EB		C	Connector(72pin)	[CN106] ｺﾈｸﾀｰ
7	RC-KZ0008QCZZ	AB	DD		C	Capacitor(50WV 0.1μF)	[C117,118,119,120,122,123] ｺﾝﾃﾞﾝｻｰ
	RC-KZ0008QCZZ	AB	DD		C	Capacitor(50WV 0.1μF)	[C124,125,149,151,153,155] ｺﾝﾃﾞﾝｻｰ
	RC-KZ0008QCZZ	AB	DD		C	Capacitor(50WV 0.1μF)	[C156,165,175,180,231,250] ｺﾝﾃﾞﾝｻｰ
	RC-KZ0008QCZZ	AB	DD		C	Capacitor(50WV 0.1μF)	[C267,282] ｺﾝﾃﾞﾝｻｰ
8	RCRSP0068FCZZ	AG	DS		B	Crystal(12.500MHZ)	[X101] ｸﾘｽﾀﾙ
9	RCRSP0069FCZZ	AG	DS		B	Crystal(14.7456MHZ)	[X103] ｸﾘｽﾀﾙ
10	RCRUA0010FCZZ	AQ	EQ		B	Crystal(24.576MHZ)	[X104] ｸﾘｽﾀﾙ
12	RFiLN0047FCZZ	AC	DJ		C	EMI filter(MMZ1608S121)	[NF101,102] EMI ﾌｧﾙﾀｰ
13	RFiLZ1042LCZZ	AC	DJ		C	Filter(ZJSR5101102)	[NF103] ﾌｨﾙﾀｰ
14	VCCCCZ1EH221J	AB	DD		C	Capacitor(25WV 220pF)	[C177] ｺﾝﾃﾞﾝｻｰ
15	VCCCCZ1HH100D	AA	DD		C	Capacitor(50WV 10pF)	[C141,143,197,233] ｺﾝﾃﾞﾝｻｰ
16	VCCCCZ1HH150J	AA	DD		C	Capacitor(50WV 15pF)	[C292] ｺﾝﾃﾞﾝｻｰ
17	VCEAPS1CC106M	AC	DD		C	Capacitor(16WV 10μF)	[C130,131,224,257] ｺﾝﾃﾞﾝｻｰ
18	VCEAPS1HC475M	AC	DJ		C	Capacitor(50WV 4.7μF)	[C161,181,182] ｺﾝﾃﾞﾝｻｰ
19	VCEAPZ1EW107M	AD	DJ		C	Capacitor(25WV 100μF)	[C249,268,273,281] ｺﾝﾃﾞﾝｻｰ
20	VCEAPZ1EW476M	AE	DJ		C	Capacitor(25WV 47μF)	[C176,192,232,245,246] ｺﾝﾃﾞﾝｻｰ
	VCEAPZ1EW476M	AE	DJ		C	Capacitor(25WV 47μF)	[C248,287,288] ｺﾝﾃﾞﾝｻｰ
21	VCFYDA1HA104J	AC	DD		C	Capacitor(50WV 0.1μF)	[C179,185,186] ｺﾝﾃﾞﾝｻｰ
22	VCFYDA1HA105J	AE	DJ		C	Capacitor(50WV 1μF)	[C178,190] ｺﾝﾃﾞﾝｻｰ
23	VCFYDA1HA333J	AC	DD		C	Capacitor(50WV 0.033μF)	[C184] ｺﾝﾃﾞﾝｻｰ
24	VCFYDA1HA474J	AD	DJ		C	Capacitor(50WV 0.47μF)	[C157] ｺﾝﾃﾞﾝｻｰ
25	VCKYCZ1AF224Z	AC	DD		C	Capacitor(10WV 0.22μF)	[C216~221,251,252,253] ｺﾝﾃﾞﾝｻｰ
	VCKYCZ1AF224Z	AC	DD		C	Capacitor(10WV 0.22μF)	[C269,271,275~279] ｺﾝﾃﾞﾝｻｰ
26	VCKYCZ1CF104Z	AB	DD		C	Capacitor(16WV 0.10μF)	[C101,102,105,106,107] ｺﾝﾃﾞﾝｻｰ
	VCKYCZ1CF104Z	AB	DD		C	Capacitor(16WV 0.10μF)	[C121,132,133,134,135,136] ｺﾝﾃﾞﾝｻｰ
	VCKYCZ1CF104Z	AB	DD		C	Capacitor(16WV 0.10μF)	[C139,140,142,144] ｺﾝﾃﾞﾝｻｰ
	VCKYCZ1CF104Z	AB	DD		C	Capacitor(16WV 0.10μF)	[C145,146,147] ｺﾝﾃﾞﾝｻｰ
	VCKYCZ1CF104Z	AB	DD		C	Capacitor(16WV 0.10μF)	[C148,163,166,168~174] ｺﾝﾃﾞﾝｻｰ
	VCKYCZ1CF104Z	AB	DD		C	Capacitor(16WV 0.10μF)	[C189,191,198~208] ｺﾝﾃﾞﾝｻｰ
	VCKYCZ1CF104Z	AB	DD		C	Capacitor(16WV 0.10μF)	[C222,223] ｺﾝﾃﾞﾝｻｰ
	VCKYCZ1CF104Z	AB	DD		C	Capacitor(16WV 0.10μF)	[C229,230,234~237,239,247] ｺﾝﾃﾞﾝｻｰ
	VCKYCZ1CF104Z	AB	DD		C	Capacitor(16WV 0.10μF)	[C254,255,256,264~266,270] ｺﾝﾃﾞﾝｻｰ
	VCKYCZ1CF104Z	AB	DD		C	Capacitor(16WV 0.10μF)	[C272,274,280,285,286,289] ｺﾝﾃﾞﾝｻｰ
	VCKYCZ1CF104Z	AB	DD		C	Capacitor(16WV 0.10μF)	[C290,291,293,294] ｺﾝﾃﾞﾝｻｰ
27	VCKYCZ1EB472K	AA	DD		C	Capacitor(25WV 4700pF)	[C154,187,104] ｺﾝﾃﾞﾝｻｰ
28	VCKYCZ1HB102K	AA	DD		C	Capacitor(50WV 1000pF)	[C152,162,188,193,194,196] ｺﾝﾃﾞﾝｻｰ
29	VCKYCZ1HB471K	AA	DD		C	Capacitor(50WV 470pF)	[C137,138] ｺﾝﾃﾞﾝｻｰ
31	VHDRB751V40-1	AD	DJ		B	Diode(RB751V40)	[D103,105] ﾀﾞｲｵｰﾄﾞ
32	VHD1SS133//-1	AA	DD		B	Diode(1SS133)	[D104] ﾀﾞｲｵｰﾄﾞ
33	VHERD5.1EB2-1	AA	DD		B	Zener diode(RD5.1EB2)	[ZD101] ﾂｪﾅｰﾀﾞｲｵｰﾄﾞ
34	VHiEES02L400P	AG	DX		B	IC(EES02L400P)	[IC110] IC
35	RH-iX0002FCZZ	AQ	EQ		B	IC(74LCX16652M)	[IC123] IC
36	VHiLCX244SJ-1	AG	DX		B	IC(LCX244SJ)	[IC124,128,129] IC
37	VHiLM111718-1	AH	DX		B	IC(LM111718)	[U101] IC
38	VHiMAX3225E-1	AT	EZ		B	IC(MAX3225E)	[IC108,109] IC
39	VHi29F04-01FC	AX	FG		B	Modem flash unit(29F04)	[IC132] ﾓﾃﾞﾑﾌﾗｯｼｭﾕﾆｯﾄ
40	VHiMN195004-1	BN	HZ		B	IC(MN195004)	[IC131] IC
42	VHiNJM2113M-1	AG	DS		B	IC(NJM2113M)	[IC114] IC
43	VHiNJM4558MF1	AE	DJ		B	IC(NJM4558MF1)	[IC112,113,115] IC
44	VHiNJU4051M-1	AG	DX		B	IC(NJU4051M)	[IC502] IC
45	VHiNJU4052BMF	AG	DS		B	IC(NJU4052BMF)	[IC503,504] IC
46	VHiNJU4053BMF	AG	DS		B	IC(NJU4053BMF)	[IC501] IC
47	VHiPST591CMT1	AE	DS		B	IC(PST591CMT1)	[IC107] IC
48	VHiPST591iM-1	AG	DS		B	IC(PST591IM)	[IC106] IC
49	VHiPST994C+-1	AG	DS		B	IC(PST994C)	[IC120] IC
50	VHiSD4M16L1-1	AZ	FX		B	IC(SD4M16L1)	[IC119] IC
51	VHiSH770910-1	BH	GX		B	IC(SH770910)	[IC111] IC
52	VHiSR1024L15J	AU	FG		B	IC(SR1024L15J)	[IC121,122] IC
53	RH-iX0004FCZZ	AS	EQ		B	IC(61C1024-15J)	[IC130] IC
54	VHiTD62503F/-	AG	DX		B	IC(TD62503F)	[IC101] IC
55	VHiTR88017S-1	BA	FX		B	IC(TR88017S)	[IC126] IC
56	VHiUPD65946-1	BB	GD		B	IC(UPD65946)	[IC127] IC
57	VHi74HC132M-1	AF	DS		B	IC(74HC132M)	[IC118,133] IC
58	VHi74HC74AM-1	AE	DJ		B	IC(74HC74AM)	[IC117] IC
59	VHi74LCX04M-1	AE	DJ		B	IC(74LCX04M)	[IC103,116] IC
60	VHi74LVX08M-1	AE	DJ		B	IC(74LVX08M)	[IC105] IC
61	VHi74LVX14M-1	AE	DJ		B	IC(74LVX14M)	[IC102] IC
62	VHP1LHEE-002A	AC	DJ		B	LED (Red)(1LHEE)	[LED104,105] LED 赤
63	VRD-HT2EY751J	AA	DD		C	Resistor(1/4W 750Ω ±5%)	[R160,231,232] 抵抗
64	VRD-HT2HY471J	AA	DD		C	Resistor(1/2W 470Ω ±5%)	[R233] 抵抗
65	VRS-CZ1JD000J	AA	DD		C	Resistor(1/16W 0Ω ±5%)	[R101,120~126,128,129,130] 抵抗
	VRS-CZ1JD000J	AA	DD		C	Resistor(1/16W 0Ω ±5%)	[R131,201,225,226,255] 抵抗
	VRS-CZ1JD000J	AA	DD		C	Resistor(1/16W 0Ω ±5%)	[R268~282,328~333,376] 抵抗
67	VRS-CZ1JD101J	AA	DD		C	Resistor(1/16W 100Ω ±5%)	[R285~298,315~327] 抵抗

49 ﾓﾃﾞﾑｺﾝﾄﾛｰﾙ基板 (Modem control PWB)[AR-C260F/C260FP]

NO.	PARTS CODE	PRICE RANK Ex.	PRICE RANK Ja.	NEW MARK	PART RANK	DESCRIPTION	
67	VRS-CZ1JD101J	AA	DD		C	Resistor(1/16W 100Ω ±5%)	[R344~359] 抵抗
68	VRS-CZ1JD102J	AA	DD		C	Resistor(1/16W 1.0KΩ ±5%)	[R342] 抵抗
69	VRS-CZ1JD103F	AA	DD		C	Resistor(1/16W 10KΩ ±1%)	[R170,210,213,227] 抵抗
70	VRS-CZ1JD103J	AA	DD		C	Resistor(1/16W 10KΩ ±5%)	[R106,117,132,176,177,178] 抵抗
	VRS-CZ1JD103J	AA	DD		C	Resistor(1/16W 10KΩ ±5%)	[R179,180,183,192,193,197] 抵抗
	VRS-CZ1JD103J	AA	DD		C	Resistor(1/16W 10KΩ ±5%)	[R198,199,229,237~252] 抵抗
	VRS-CZ1JD103J	AA	DD		C	Resistor(1/16W 10KΩ ±5%)	[R264,265,266,283] 抵抗
	VRS-CZ1JD103J	AA	DD		C	Resistor(1/16W 10KΩ ±5%)	[R284,310,311] 抵抗
	VRS-CZ1JD103J	AA	DD		C	Resistor(1/16W 10KΩ ±5%)	[R312,313,314,334,335,336] 抵抗
	VRS-CZ1JD103J	AA	DD		C	Resistor(1/16W 10KΩ ±5%)	[R337,338,343,367] 抵抗
71	VRS-CZ1JD104J	AA	DD		C	Resistor(1/16W 100KΩ ±5%)	[R187,191] 抵抗
72	VRS-CZ1JD123J	AA	DD		C	Resistor(1/16W 12KΩ ±5%)	[R174] 抵抗
73	VRS-CZ1JD133F	AA	DD		C	Resistor(1/16W 13KΩ ±1%)	[R184,185] 抵抗
74	VRS-CZ1JD152J	AA	DD		C	Resistor(1/16W 1.5KΩ ±5%)	[R234] 抵抗
75	VRS-CZ1JD153F	AB	DD		C	Resistor(1/16W 15KΩ ±1%)	[R166,167,168,169] 抵抗
76	VRS-CZ1JD183J	AA	DD		C	Resistor(1/16W 18KΩ ±5%)	[R215,228] 抵抗
77	VRS-CZ1JD203J	AA	DD		C	Resistor(1/16W 20KΩ ±5%)	[R186] 抵抗
78	VRS-CZ1JD222J	AA	DD		C	Resistor(1/16W 2.2KΩ ±5%)	[R230] 抵抗
79	VRS-CZ1JD273F	AA	DD		C	Resistor(1/16W 27KΩ ±1%)	[R214] 抵抗
80	VRS-CZ1JD273J	AA	DD		C	Resistor(1/16W 27KΩ ±5%)	[R195,366,378,204] 抵抗
81	VRS-CZ1JD302J	AA	DD		C	Resistor(1/16W 3KΩ ±5%)	[R173] 抵抗
82	VRS-CZ1JD330J	AA	DD		C	Resistor(1/16W 33Ω ±5%)	[R104,134,267,300~309] 抵抗
	VRS-CZ1JD330J	AA	DD		C	Resistor(1/16W 33Ω ±5%)	[R361,368~371,373~375] 抵抗
83	VRS-CZ1JD333J	AA	DD		C	Resistor(1/16W 33KΩ ±5%)	[R211,212,224] 抵抗
84	VRS-CZ1JD363J	AA	DD		C	Resistor(1/16W 36KΩ ±5%)	[R189] 抵抗
85	VRS-CZ1JD393F	AA	DD		C	Resistor(1/16W 39KΩ ±1%)	[R171] 抵抗
86	VRS-CZ1JD393J	AA	DD		C	Resistor(1/16W 39KΩ ±5%)	[R216] 抵抗
87	VRS-CZ1JD471J	AA	DD		C	Resistor(1/16W 470Ω ±5%)	[R116,340] 抵抗
88	VRS-CZ1JD472J	AA	DD		C	Resistor(1/16W 4.7KΩ ±5%)	[R103,105,114,133] 抵抗
	VRS-CZ1JD472J	AA	DD		C	Resistor(1/16W 4.7KΩ ±5%)	[R135,139~142] 抵抗
	VRS-CZ1JD472J	AA	DD		C	Resistor(1/16W 4.7KΩ ±5%)	[R144,145,148] 抵抗
	VRS-CZ1JD472J	AA	DD		C	Resistor(1/16W 4.7KΩ ±5%)	[R161,163,164,165,202] 抵抗
	VRS-CZ1JD472J	AA	DD		C	Resistor(1/16W 4.7KΩ ±5%)	[R205,206,207] 抵抗
	VRS-CZ1JD472J	AA	DD		C	Resistor(1/16W 4.7KΩ ±5%)	[R208,209,260] 抵抗
	VRS-CZ1JD472J	AA	DD		C	Resistor(1/16W 4.7KΩ ±5%)	[R261,262,263,299,360] 抵抗
89	VRS-CZ1JD473J	AA	DD		C	Resistor(1/16W 47KΩ ±5%)	[R235] 抵抗
90	VRS-CZ1JD513J	AA	DD		C	Resistor(1/16W 51KΩ ±5%)	[R182] 抵抗
91	VRS-CZ1JD560J	AA	DD		C	Resistor(1/16W 56Ω ±5%)	[R143,236] 抵抗
92	VRS-CZ1JD682J	AA	DD		C	Resistor(1/16W 6.8KΩ ±5%)	[R172,190] 抵抗
93	VRS-CZ1JD683J	AA	DD		C	Resistor(1/16W 68KΩ ±5%)	[R188] 抵抗
94	VRS-CZ1JD753J	AA	DD		C	Resistor(1/16W 75KΩ ±5%)	[R200] 抵抗
95	VRS-CZ1JD912J	AA	DD		C	Resistor(1/16W 9.1KΩ ±5%)	[R217] 抵抗
96	VRS-CZ1JD913J	AA	DD		C	Resistor(1/16W 91KΩ ±5%)	[R220] 抵抗
97	VSDTA114EUA-1	AC	DJ		B	Transistor(DTA114EUA)	[TR118] ﾄﾗﾝｼﾞｽﾀｰ
98	VSDTC114EUA-1	AC	DJ		B	Transistor(DTC114EUA)	[TR101,111,117] ﾄﾗﾝｼﾞｽﾀｰ
99	VSDTC363EU+-1	AC	DJ		B	Transistor(DTC363EU)	[TR102,103,104,105,109,110] ﾄﾗﾝｼﾞｽﾀｰ
	VSDTC363EU+-1	AC	DJ		B	Transistor(DTC363EU)	[TR112,113,114,115,116] ﾄﾗﾝｼﾞｽﾀｰ
	VSDTC363EU+-1	AC	DJ		B	Transistor(DTC363EU)	[TR120,121,122,123,124] ﾄﾗﾝｼﾞｽﾀｰ
100	VS2SD592A//-1	AE	DJ		B	Transistor(2SD592A)	[TR119] ﾄﾗﾝｼﾞｽﾀｰ
101	PCAPH0010GCZZ	AD	DJ		C	Cap(JM-2W-96)	[JP104] ｷｬｯﾌﾟ
102	QPiN-0003GCZZ	AC	DJ		C	Pin(T3B-SQ)	[JP104] ﾋﾟﾝ
103	VCKYCZ1CB103K	AA	DD		C	Capacitor(16WV 0.010μF)	[C295] ｺﾝﾃﾞﾝｻｰ
	(Unit)						
901	CPWBN1472FCE4	CG	UM	N	E	Modem control PWB unit	ﾓﾃﾞﾑｺﾝﾄﾛｰﾙ基板ﾕﾆｯﾄ

50 TEL/LIU 基板ﾕﾆｯﾄ (TEL/LIU PWB)[AR-C260F/C260FP]

NO.	PARTS CODE	PRICE RANK Ex.	PRICE RANK Ja.	NEW MARK	PART RANK	DESCRIPTION	
1	QCNCW1155FCZZ	AE	DJ		C	Connector(30pin)	[CN2] ｺﾈｸﾀｰ
2	QJAKT0001FCZZ	AD	DJ		C	Moduler connector(2pin)	[MJ1] ﾓｼﾞｭﾗｰｺﾈｸﾀｰ
3	QJAKT0002FCZZ	AE	DJ		C	Moduler connector(6pin)	[MJ2] ﾓｼﾞｭﾗｰｺﾈｸﾀｰ
4	RC-KZ0008QCZZ	AB	DD		C	Capacitor(50WV 0.1μF)	[C5,33,34,43,45,53] ｺﾝﾃﾞﾝｻｰ
	RC-KZ0008QCZZ	AB	DD		C	Capacitor(50WV 0.1μF)	[C17,27,35,47] ｺﾝﾃﾞﾝｻｰ
6	RCiLZ0089FCZZ	AG	DX		C	Coil(ST110AV)	[L8] ｺｲﾙ
7	RFiLN0047FCZZ	AC	DJ		C	EMI filter(MMZ1608S121)	[NF1] EMI ﾌｧﾙﾀｰ
8	RFiLN2011SCZZ	AC	DJ		C	Coil(SBT-0260)	[L1,2,6,7] ｺｲﾙ
	RFiLN2011SCZZ	AC	DJ		C	Coil(SBT-0260)	[L3,4,5] ｺｲﾙ
9	RR-WZ0418FCZZ	AF	DS		B	Relay(HPC1/2W)	[R30] ﾘﾚｰ
10	RRLYD1211QCZZ	AH	DX		B	Relay(OUAZSH112LZ)	[RY2] ﾘﾚｰ
	RRLYD1211QCZZ	AH	DX		B	Relay(OUAZSH112LZ)	[RY1] ﾘﾚｰ
11	RRLYD1411QCZZ	AM	EG		B	Relay(RSH-12-U)	[RY3,4] ﾘﾚｰ
14	VCCCCZ1EH221J	AB	DD		C	Capacitor(25WV 220pF)	[C50] ｺﾝﾃﾞﾝｻｰ
	VCCCCZ1EH221J	AB	DD		C	Capacitor(25WV 220pF)	[C20,32] ｺﾝﾃﾞﾝｻｰ
15	VCCCCZ1HH101J	AA	DD		C	Capacitor(50WV 100pF)	[C44] ｺﾝﾃﾞﾝｻｰ
16	VCEAZA1EW476M	AC	DD		C	Capacitor(25WV 47μF)	[C14,51] ｺﾝﾃﾞﾝｻｰ
17	VCEAZA1HW105M	AB	DD		C	Capacitor(50WV 1.0μF)	[C52] ｺﾝﾃﾞﾝｻｰ

50 TEL/LIU 基板ユニット (TEL/LIU PWB)[AR-C260F/C260FP]

NO.	PARTS CODE	PRICE RANK		NEW MARK	PART RANK	DESCRIPTION	
		Ex.	Ja.				
17	VCEAZA1HW105M	AB	DD		C	Capacitor(50WV 1.0μF)	[C36] ｺﾝﾃﾞﾝｻｰ
18	VCEAZA1HW226M	AC	DD		C	Capacitor(50WV 22μF)	[C1] ｺﾝﾃﾞﾝｻｰ
19	VCEAZA1HW334M	AB	DD		C	Capacitor(50WV 0.33μF)	[C10] ｺﾝﾃﾞﾝｻｰ
20	VCEAZA1HW475M	AB	DD		C	Capacitor(50WV 4.7μF)	[C4,11,42,48,49] ｺﾝﾃﾞﾝｻｰ
21	VCE9EA1CW106M	AC	DD		C	Capacitor(16WV 10μF)	[C30,31] ｺﾝﾃﾞﾝｻｰ
22	VCE9GA1CW476M	AD	DD		C	Capacitor(16WV 47μF)	[C8] ｺﾝﾃﾞﾝｻｰ
23	VCFYJU2EA105K	AE	DS		C	Capacitor(250WV 1μF)	[C6] ｺﾝﾃﾞﾝｻｰ
25	VCKYCZ1HB102K	AA	DD		C	Capacitor(50WV 1000pF)	[C9] ｺﾝﾃﾞﾝｻｰ
	VCKYCZ1HB102K	AA	DD		C	Capacitor(50WV 1000pF)	[C2,18,19,21,28] ｺﾝﾃﾞﾝｻｰ
26	VCKYCZ1HB471K	AA	DD		C	Capacitor(50WV 470pF)	[C39] ｺﾝﾃﾞﾝｻｰ
27	VHD0R5G4B42-1	AF	DS		B	Diode(0R5G4B42)	[REC1,2] ﾀﾞｲｵｰﾄﾞ
28	VHD1SS133//-1	AA	DD		B	Diode(1SS133)	[D7,8,9] ﾀﾞｲｵｰﾄﾞ
	VHD1SS133//-1	AA	DD		B	Diode(1SS133)	[D1,3,4,5,6,10] ﾀﾞｲｵｰﾄﾞ
29	VHD10DDA40+-1	AB	DD		B	Diode(10DDA40)	[D2] ﾀﾞｲｵｰﾄﾞ
30	VHEHZS2C1//-1	AB	DJ		B	Zener diode(HZS2C1)	[ZD2,3] ﾂｪﾅｰﾀﾞｲｵｰﾄﾞ
31	VHEMTZJ33B+-1	AC	DJ		B	Zener diode(MTZJ33B)	[ZD1,6] ﾂｪﾅｰﾀﾞｲｵｰﾄﾞ
32	VHEMTZJ4R7B-1	AC	DJ		B	Zener diode(MTZJ4R7B)	[ZD4,5,8,9] ﾂｪﾅｰﾀﾞｲｵｰﾄﾞ
33	VHEMTZJ8.2B-1	AB	DJ		B	Zener diode(MTZJ8.2B)	[ZD7] ﾂｪﾅｰﾀﾞｲｵｰﾄﾞ
34	VHiBU4066BCF1	AD	DJ		B	IC(BU4066BCF1)	[IC103,104] IC
35	VHiNJM4558MF1	AE	DJ		B	IC(NJM4558MF1)	[IC102,105,107,108] IC
36	VHiTA31076F-1	AH	DX		B	IC(TA31076F)	[IC101] IC
37	VHPPC814X1+-1	AD	DJ		B	Photo coupler(PC814X1)	[PC3] ﾌｫﾄｶﾌﾟﾗｰ
38	VHPPC817D//-1	AD	DJ		B	Photo coupler(PC817D)	[PC1,4] ﾌｫﾄｶﾌﾟﾗｰ
39	VHPTLP624-1BV	AG	DX		B	Photo coupler(TLP624)	[PC2] ﾌｫﾄｶﾌﾟﾗｰ
40	VHVDSS-401M//	AH	DX		B	Arrestor(DSS)	[SA2] ｱﾚｽﾀ
41	VHVTNR5V471K/	AD	DJ		B	Varistor(TNR5V471K)	[SA1] ﾊﾞﾘｽﾀｰ
42	VHVTN07G101-1	AB	DJ		B	Varistor(TN07G101)	[VA2] ﾊﾞﾘｽﾀｰ
43	VRD-HT2EY100J	AA	DD		C	Resistor(1/4W 10Ω ±5%)	[R11,53] 抵抗
44	VRD-HT2EY104J	AA	DD		C	Resistor(1/4W 100KΩ ±5%)	[R20] 抵抗
45	VRD-HT2EY124J	AA	DD		C	Resistor(1/4W 120KΩ ±5%)	[R21] 抵抗
46	VRD-HT2EY164J	AA	DD		C	Resistor(1/4W 160KΩ ±5%)	[R4] 抵抗
47	VRD-HT2EY183J	AA	DD		C	Resistor(1/4W 18KΩ ±5%)	[R39] 抵抗
48	VRD-HT2EY204J	AA	DD		C	Resistor(1/4W 200KΩ ±5%)	[R3] 抵抗
49	VRD-HT2EY224J	AA	DD		C	Resistor(1/4W 220KΩ ±5%)	[R19] 抵抗
50	VRD-HT2EY300J	AA	DD		C	Resistor(1/4W 30Ω ±5%)	[R18] 抵抗
52	VRD-HT2EY303J	AA	DD		C	Resistor(1/4W 30KΩ ±5%)	[R38] 抵抗
53	VRD-HT2EY471J	AA	DD		C	Resistor(1/4W 470Ω ±5%)	[R7] 抵抗
55	VRD-HT2EY682J	AA	DD		C	Resistor(1/4W 6.8KΩ ±5%)	[R5] 抵抗
56	VRD-HT2EY910J	AA	DD		C	Resistor(1/4W 91Ω ±5%)	[R10] 抵抗
57	VRS-CZ1JD000J	AA	DD		C	Resistor(1/16W 0Ω ±5%)	[R1,2,6] 抵抗
58	VRS-CZ1JD102J	AA	DD		C	Resistor(1/16W 1.0KΩ ±5%)	[R15,23,26,28,29] 抵抗
59	VRS-CZ1JD103J	AA	DD		C	Resistor(1/16W 10KΩ ±5%)	[R14,25,56,75,76] 抵抗
60	VRS-CZ1JD113J	AA	DD		C	Resistor(1/16W 11KΩ ±5%)	[R43,79,81] 抵抗
61	VRS-CZ1JD153J	AA	DD		C	Resistor(1/16W 15KΩ ±5%)	[R74] 抵抗
62	VRS-CZ1JD183J	AA	DD		C	Resistor(1/16W 18KΩ ±5%)	[R78] 抵抗
63	VRS-CZ1JD203J	AA	DD		C	Resistor(1/16W 20KΩ ±5%)	[R41,54] 抵抗
64	VRS-CZ1JD223J	AA	DD		C	Resistor(1/16W 22KΩ ±5%)	[R8,33,48,49,50] 抵抗
	VRS-CZ1JD223J	AA	DD		C	Resistor(1/16W 22KΩ ±5%)	[R65,66,68,71] 抵抗
	VRS-CZ1JD223J	AA	DD		C	Resistor(1/16W 22KΩ ±5%)	[R51,52,59,60] 抵抗
65	VRS-CZ1JD243J	AA	DD		C	Resistor(1/16W 24KΩ ±5%)	[R55] 抵抗
	VRS-CZ1JD243J	AA	DD		C	Resistor(1/16W 24KΩ ±5%)	[R82] 抵抗
66	VRS-CZ1JD272J	AA	DD		C	Resistor(1/16W 2.7KΩ ±5%)	[R40] 抵抗
67	VRS-CZ1JD273J	AA	DD		C	Resistor(1/16W 27KΩ ±5%)	[R58,77,84] 抵抗
68	VRS-CZ1JD332J	AA	DD		C	Resistor(1/16W 3.3KΩ ±5%)	[R44] 抵抗
70	VRS-CZ1JD512J	AA	DD		C	Resistor(1/16W 5.1KΩ ±5%)	[R73] 抵抗
71	VRS-CZ1JD513J	AA	DD		C	Resistor(1/16W 51KΩ ±5%)	[R72] 抵抗
72	VRS-CZ1JD621J	AA	DD		C	Resistor(1/16W 681KΩ ±5%)	[R67,69] 抵抗
74	VRS-RA3AA202J	AB	DD		C	Resistor(1W 2KΩ ±5%)	[R13] 抵抗
75	VSDTC143ZKA-1	AC	DJ		B	Transistor(DTC143ZKA)	[Q104,117,118,119,121,122] ﾄﾗﾝｼﾞｽﾀｰ
	VSDTC143ZKA-1	AC	DJ		B	Transistor(DTC143ZKA)	[Q101,102,105,106,111,112] ﾄﾗﾝｼﾞｽﾀｰ
	VSDTC143ZKA-1	AC	DJ		B	Transistor(DTC143ZKA)	[Q113,115,116,120,123] ﾄﾗﾝｼﾞｽﾀｰ
76	VS2SA1807-P-1	AE	DS		B	Transistor(2SA1807)	[Q110] ﾄﾗﾝｼﾞｽﾀｰ
77	VS2SC2412KS-1	AB	DD		B	Transistor(2SC2412KS)	[Q108,109] ﾄﾗﾝｼﾞｽﾀｰ
78	VS2SC3415-P-1	AP	EQ		B	Transistor(2SC3415)	[Q1] ﾄﾗﾝｼﾞｽﾀｰ
79	VS2SD1266A0-1	AF	DS		B	Transistor(2SD1266A0)	[Q2] ﾄﾗﾝｼﾞｽﾀｰ
80	VS2SD592A-S-1	AK	DX		B	Transistor(2SD592A)	[Q3] ﾄﾗﾝｼﾞｽﾀｰ
81	QCNCM1156FCZZ	AD	DJ		C	Connector(3pin)	[CN3] ｺﾈｸﾀｰ
82	QSOCD0081FCZZ	AL	EB		C	Connector(6pin)	[CN1] ｺﾈｸﾀｰ
83	RC-KZ0009QCZZ	AB	DD		C	Capacitor(50WV 0.01μF)	[C24] ｺﾝﾃﾞﾝｻｰ
84	RRLYD3211QCZZ	AM	EG		B	Relay(G6E134PUS)	[RY5] ﾘﾚｰ
85	RTRNP0534FCZZ	AT	EZ		B	Transformer(CIT1414EP-A)	[T3] ﾄﾗﾝｽ
86	RTRNP2105SCZZ	AP	EQ		B	Transformer(2105)	[T1] ﾄﾗﾝｽ
87	VCEAZA1HW225M	AB	DD		C	Capacitor(50WV 2.2μF)	[C16,22,26,29] ｺﾝﾃﾞﾝｻｰ
88	VCFYDA1HA105J	AE	DJ		C	Capacitor(50WV 1μF)	[C13] ｺﾝﾃﾞﾝｻｰ
89	VCFYJU2AA824K	AF	DS		C	Capacitor(100WV 0.82μF)	[C23] ｺﾝﾃﾞﾝｻｰ
90	VCFYJU2GA473K	AC	DD		C	Capacitor(400WV 0.047μF)	[C7] ｺﾝﾃﾞﾝｻｰ
91	VCKYCZ1AB333K	AB	DD		C	Capacitor(10WV 0.033μF)	[C38,54] ｺﾝﾃﾞﾝｻｰ
92	VCKYCZ1HB222K	AA	DD		C	Capacitor(50WV 2200pF)	[C3] ｺﾝﾃﾞﾝｻｰ
93	VCQYNU1HM223K	AA	DD		C	Capacitor(50WV 0.023μF)	[C15] ｺﾝﾃﾞﾝｻｰ
95	VHiH8D3063+-1	AW	FG		B	IC(H8D3063)	[IC1] IC

50 TEL/LIU 基板ﾕﾆｯﾄ (TEL/LIU PWB)[AR-C260F/C260FP]

NO.	PARTS CODE	PRICE RANK		NEW MARK	PART RANK	DESCRIPTION	
		Ex.	Ja.				
97	VHiTHS56F//-1	AS	EZ		B	IC(THS56F)	[IC2] IC
98	VRD-HT2EY472J	AA	DD		C	Resistor(1/4W 4.7KΩ ±5%)	[R22] 抵抗
99	VRS-CZ1JD151J	AA	DD		C	Resistor(1/16W 150Ω ±1%)	[R46] 抵抗
100	VRS-CZ1JD222J	AA	DD		C	Resistor(1/16W 2.2KΩ ±5%)	[R45] 抵抗
101	VRS-CZ1JD331J	AA	DD		C	Resistor(1/16W 330Ω ±5%)	[R16] 抵抗
102	VRS-CZ1JD363J	AA	DD		C	Resistor(1/16W 36KΩ ±5%)	[R57] 抵抗
103	VRS-CZ1JD393J	AA	DD		C	Resistor(1/16W 39KΩ ±5%)	[R31] 抵抗
104	VRS-CZ1JD472J	AA	DD		C	Resistor(1/16W 4.7KΩ ±5%)	[R9] 抵抗
105	VRS-CZ1JD683J	AA	DD		C	Resistor(1/16W 68KΩ ±5%)	[R27,42] 抵抗
106	VRS-CZ1JD821J	AA	DD		C	Resistor(1/16W 820Ω ±5%)	[R64] 抵抗
107	VRS-CZ1JD822J	AA	DD		C	Resistor(1/16W 8.2KΩ ±5%)	[R32] 抵抗
108	VRS-RA3AA472J	AB	DD		C	Resistor(1W 4.7KΩ ±5%)	[R83] 抵抗
	(Unit)						
901	CPWBN1491FCE1	CA	TV		E	TEL/LIU PWB unit	TEL/LIU 基板ﾕﾆｯﾄ

51 PCU 基板 (PCU PWB)

NO.	PARTS CODE	PRICE RANK		NEW MARK	PART RANK	DESCRIPTION	
		Ex.	Ja.				
1	QCNCM0879FCZZ	AF	DS		C	Connector(28Pin)	[CN17] ｺﾈｸﾀｰ
2	QCNCM0923FC10	AE	DJ		C	Connector(10pin)	[CN6,CN14] ｺﾈｸﾀｰ
3	QCNCM0923FC12	AE	DJ		C	Connector(12pin)	[CN10] ｺﾈｸﾀｰ
4	QCNCM0923FC16	AF	DS		C	Connector(16pin)	[CN19] ｺﾈｸﾀｰ
5	QCNCM0923FC22	AF	DS		C	Connector(22pin)	[CN20] ｺﾈｸﾀｰ
6	QCNCM0923FC24	AF	DS		C	Connector(24pin)	[CN9] ｺﾈｸﾀｰ
7	QCNCM0923FC32	AG	DS		C	Connector(32Pin)	[CN7] ｺﾈｸﾀｰ
8	QCNCM0923FC3D	AF	DS		C	Connector(B34B-PHDSS)(34pin)	[CN11,CN12] ｺﾈｸﾀｰ
9	QCNCM7014SC0C	AA	DD		C	Connector(3pin)	[CN1,CN3,CN5,CN8] ｺﾈｸﾀｰ
10	QCNCM7014SC0F	AB	DD		C	Connector(6pin)	[CN13,CN2] ｺﾈｸﾀｰ
11	QCNCW0885FCZZ	AG	DX		C	Connector(1-171825-2)	[CN4] ｺﾈｸﾀｰ
13	QCNCW1170FCZZ	AG	DS		C	Connector(28FMZ-BT)	[CN16] ｺﾈｸﾀｰ
14	QSOCZ0073FCZZ	AL	EB		C	Connector(72pin)	[SOCKET1] ｺﾈｸﾀｰ
15	QSOCZ6428ACZZ	AE	DS		C	IC socket(28pin)	[IC22] IC ｿｹｯﾄ
16	RCRSP0071FCZZ	AH	DX	N	B	Crystal(AT-51(20.00MHz))	[X1] ｸﾘｽﾀﾙ
17	RCRSZ0001QSZZ	AG	DS		B	Crystal(AT-51(19.6608MHz))	[X2] ｸﾘｽﾀﾙ
18	RFiLZ0004QSZZ	AM	EG		C	Filter(ZJSR5101-223)	[NF5,NF4] ﾌｨﾙﾀ -
19	RFiLZ1043LCZZ	AC	DJ		C	Filter(33000pF)	[NF1,NF2,NF3] ﾌｨﾙﾀｰ
20	RH-iX0003QSZZ	AQ	EQ		B	IC(SRAM)(IS61LV256-12J)	[IC25,IC24] IC(SRAM)
21	RMPTW4101QCJJ	AB	DD		B	Block resistor(100Ω×4)	[BR15,BR19] ﾌﾞﾛｯｸﾃｲｺｳ
22	RMPTW4102QCJJ	AB	DD		B	Block resistor(1.0KΩ×4)	[BR26,BR29] ﾌﾞﾛｯｸﾃｲｺｳ
	RMPTW4102QCJJ	AB	DD		B	Block resistor(1.0KΩ×4)	[BR31,BR34,BR35,BR36,BR38] ﾌﾞﾛｯｸﾃｲｺｳ
23	RMPTW4103QCJJ	AB	DD		B	Block resistor(10KΩ×4)	[BR21,BR24,BR41,BR42,BR43] ﾌﾞﾛｯｸﾃｲｺｳ
	RMPTW4103QCJJ	AB	DD		B	Block resistor(10KΩ×4)	[BR44,BR45,BR46,BR17] ﾌﾞﾛｯｸﾃｲｺｳ
24	RMPTW4330QCJJ	AB	DD		B	Resistor arrey(33Ω×4 1/32W ±5%)	[BR8,BR9] ﾃｲｺｳｱﾚｲ
	RMPTW4330QCJJ	AB	DD		B	Resistor arrey(33Ω×4 1/32W ±5%)	[BR10,BR11] ﾃｲｺｳｱﾚｲ
	RMPTW4330QCJJ	AB	DD		B	Resistor arrey(33Ω×4 1/32W ±5%)	[BR12,BR16,BR20] ﾃｲｺｳｱﾚｲ
	RMPTW4330QCJJ	AB	DD		B	Resistor arrey(33Ω×4 1/32W ±5%)	[BR23,BR47] ﾃｲｺｳｱﾚｲ
26	RMPTW4472QCJJ	AB	DD		B	Resistor arrey(4.7kΩ×4 ±5%)	[BR1,BR4,BR5,BR6,BR13] ﾃｲｺｳｱﾚｲ
	RMPTW4472QCJJ	AB	DD		B	Resistor arrey(4.7kΩ×4 ±5%)	[BR14,BR27,BR28] ﾃｲｺｳｱﾚｲ
	RMPTW4472QCJJ	AB	DD		B	Resistor arrey(4.7kΩ×4 ±5%)	[BR32,BR33] ﾃｲｺｳｱﾚｲ
	RMPTW4472QCJJ	AB	DD		B	Resistor arrey(4.7kΩ×4 ±5%)	[BR40] ﾃｲｺｳｱﾚｲ
27	RMPTW4473QCJJ	AB	DD		B	Resistor arrey(47kΩ×4 ±5%)	[BR30,BR37,BR39] ﾃｲｺｳｱﾚｲ
29	VCCCCZ1HH180J	AA	DD		C	Capacitor(50WV 18pF)(GRM36CH180J50PT)	[C82,C89] ｺﾝﾃﾞﾝｻｰ
30	VCCCCZ1HH220J	AA	DD		C	Capacitor(50WV 22pF)	[C84,C83] ｺﾝﾃﾞﾝｻｰ
31	VCCUCY1AJ105Z	AC	DD		C	Capacitor(10WV 1.0μF)	[C105] ｺﾝﾃﾞﾝｻｰ
32	VCEAGA0JW107M	AC	DD		C	Capacitor(6.3WV 100μF)	[C110] ｺﾝﾃﾞﾝｻｰ
33	VCEAGA1AW108M	AC	ZT		C	Capacitor(10WV 1000μF)	[C44] ｺﾝﾃﾞﾝｻｰ
34	VCEAGA1AW477M	AB	DD		C	Capacitor(10WV 470μF)	[C55] ｺﾝﾃﾞﾝｻｰ
35	VCEAZU1VW106M	AB	DD		C	Capacitor(10μF/35V)(SMG35VB-10M)	[C15,C35,C40] ｺﾝﾃﾞﾝｻｰ
	VCEAZU1VW106M	AB	DD		C	Capacitor(10μF/35V)(SMG35VB-10M)	[CC48,C56] ｺﾝﾃﾞﾝｻｰ
	VCEAZU1VW106M	AB	DD		C	Capacitor(10μF/35V)(SMG35VB-10M)	[C58,C68,C77] ｺﾝﾃﾞﾝｻｰ
36	VCEAZU0JW338M	AE	DJ		C	Capacitor(3300μF/6.3V)(UVR0J332MPA1TD)	[C60] ｺﾝﾃﾞﾝｻｰ
37	VCEAZU1VW477M	AD	DJ		C	Capacitor(35WV 470μF)	[C3] ｺﾝﾃﾞﾝｻｰ
38	VCKYCY1HB223K	AC	DD		C	Capacitor(50WV 0.022μF)	[C2,C4,C5,C6,C7] ｺﾝﾃﾞﾝｻｰ
	VCKYCY1HB223K	AC	DD		C	Capacitor(50WV 0.022μF)	[C13,C14,C88] ｺﾝﾃﾞﾝｻｰ
39	VCKYCZ1CF104Z	AB	DD		C	Capacitor(16WV 0.1μF)	[C1,C8,C9,C11,C16] ｺﾝﾃﾞﾝｻｰ
	VCKYCZ1CF104Z	AB	DD		C	Capacitor(16WV 0.1μF)	[C17,C20,C23,C30,C33] ｺﾝﾃﾞﾝｻｰ
	VCKYCZ1CF104Z	AB	DD		C	Capacitor(16WV 0.1μF)	[C34,C36,C37,C38,C39] ｺﾝﾃﾞﾝｻｰ
	VCKYCZ1CF104Z	AB	DD		C	Capacitor(16WV 0.1μF)	[C42,C43,C45,C46,C47] ｺﾝﾃﾞﾝｻｰ
	VCKYCZ1CF104Z	AB	DD		C	Capacitor(16WV 0.1μF)	[C49,C50,C52,C53,C54] ｺﾝﾃﾞﾝｻｰ
	VCKYCZ1CF104Z	AB	DD		C	Capacitor(16WV 0.1μF)	[C57,C59,C61,C62,C63] ｺﾝﾃﾞﾝｻｰ
	VCKYCZ1CF104Z	AB	DD		C	Capacitor(16WV 0.1μF)	[C64,C65,C66,C70] ｺﾝﾃﾞﾝｻｰ
	VCKYCZ1CF104Z	AB	DD		C	Capacitor(16WV 0.1μF)	[C81,C85,C86,C87,C90] ｺﾝﾃﾞﾝｻｰ
	VCKYCZ1CF104Z	AB	DD		C	Capacitor(16WV 0.1μF)	[C91,C95,C96,C97,C101] ｺﾝﾃﾞﾝｻｰ
	VCKYCZ1CF104Z	AB	DD		C	Capacitor(16WV 0.1μF)	[C104,C107,C109] ｺﾝﾃﾞﾝｻｰ
	VCKYCZ1CF104Z	AB	DD		C	Capacitor(16WV 0.1μF)	[C111,C112,C113,C114,C115] ｺﾝﾃﾞﾝｻｰ
	VCKYCZ1CF104Z	AB	DD		C	Capacitor(16WV 0.1μF)	[C116,C118,C123,C124,C125] ｺﾝﾃﾞﾝｻｰ

51 PCU 基板 (PCU PWB)

NO.	PARTS CODE	PRICE RANK		NEW MARK	PART RANK	DESCRIPTION		
		Ex.	Ja.					
39	VCKYCZ1CF104Z	AB	DD		C	Capacitor(16WV 0.1μF)	[C126,C127,C139]	ｺﾝﾃﾞﾝｻｰ
40	VCKYCZ1HB102K	AA	DD		C	Capacitor(50WV 1000pF)	[C18,C19,C21,C22,C24]	ｺﾝﾃﾞﾝｻｰ
	VCKYCZ1HB102K	AA	DD		C	Capacitor(50WV 1000pF)	[C25,C26,C27,C28,C29]	ｺﾝﾃﾞﾝｻｰ
	VCKYCZ1HB102K	AA	DD		C	Capacitor(50WV 1000pF)	[C31,C32,C69,C71,C72]	ｺﾝﾃﾞﾝｻｰ
	VCKYCZ1HB102K	AA	DD		C	Capacitor(50WV 1000pF)	[C73,C74,C75,C76,C78]	ｺﾝﾃﾞﾝｻｰ
	VCKYCZ1HB102K	AA	DD		C	Capacitor(50WV 1000pF)	[C79]	ｺﾝﾃﾞﾝｻｰ
	VCKYCZ1HB102K	AA	DD		C	Capacitor(50WV 1000pF)	[C106,C108,C117]	ｺﾝﾃﾞﾝｻｰ
	VCKYCZ1HB102K	AA	DD		C	Capacitor(50WV 1000pF)	[C119,C120,C121,C122]	ｺﾝﾃﾞﾝｻｰ
41	VHDDAN202U/-1	AB	DD		B	Diode(DAN202U)	[D2,D7,D8,D9]	ﾀﾞｲｵｰﾄﾞ
	VHDDAN202U/-1	AB	DD		B	Diode(DAN202U)	[D21,D22]	ﾀﾞｲｵｰﾄﾞ
42	VHDDAP202U/-1	AB	DD		B	Diode(DAP202U)	[D10,D23]	ﾀﾞｲｵｰﾄﾞ
43	VHDDSS133//-1	AA	DD		B	Diode(1SS133)	[D1,D5,D11,D12,D13,D20]	ﾀﾞｲｵｰﾄﾞ
44	VHDMA704A//-1	AC	DJ		B	Diode(MA704A)	[D15,D16]	ﾀﾞｲｵｰﾄﾞ
45	VHDRA13++++-1	AD	DJ		B	Diode(RA13)	[D14]	ﾀﾞｲｵｰﾄﾞ
46	VHERD22FB//-1	AD	DJ		B	Zener diode(RD22FB)	[D4]	ﾂｴﾅｰﾀﾞｲｵｰﾄﾞ
47	VHH103AT-2/-1	AG	DS		B	Thermistor(103AT-2)	[TH1]	ｻｰﾐｽﾀｰ
48	VHHMSMDC014-1	AF	DS		B	Thermistor(miniSMDC014)	[R71]	ﾎﾞﾘｽｲｯﾁ
49	VHi65946P110C	BB	GD		B	I/O_ASIC(uPD65946GN-P11-LMU)	[IC27]	IC
50	VHi74VHC32MTC	AD	DJ		B	IC(74VHC32MTC)	[IC9]	IC
52	VHiH8S2320+-1	AY	FQ		B	IC(H8S/2320)	[IC23]	IC
53	VHiHC151MTC-1	AE	DJ		B	LOGIC(74HC151MTCX)	[IC13,IC14,IC15,IC20]	IC
54	VHiHN58V65A-1	AW	FG		B	EEPROM(HN58V65AP)	[IC22]	EEPROM
55	VHiLM324D++-1	AE	DJ		B	OP-AMP(LM324DR)	[IC19]	IC
56	VHiLM339D++-1	AE	DJ		B	IC(LM339DT)	[IC17]	ｺﾝﾊﾟﾚｰﾀ
57	VHiM51957BFP1	AH	DX		B	IC(M51957BFP1)	[IC35,IC34]	IC
59	VHiSLA7031M-1	AQ	EQ		B	IC(SLA7031M)	[IC1,IC28]	IC
60	VHiSLA7032M-1	AR	EQ		B	IC(SLA7032M)	[IC2]	IC
61	VHiTA7291AS-1	AG	DX		B	IC(TA7291AS)	[IC12]	IC
62	VHiTD62003AF/	AE	DS		B	IC(TD62003AF)	[IC3,IC4,IC5,IC6,IC7]	IC
	VHiTD62003AF/	AE	DS		B	IC(TD62003AF)	[IC8,IC33]	IC
63	VHiVC4051MT-1	AF	DS		B	LOGIC(74VHC4051MTCX)	[IC36]	IC
64	VHiVHC14MTC-1	AD	DJ		B	LOGIC(74VHC14AMTCX)	[IC10,IC16,IC18,IC32]	IC
65	VHiVHCT14AM-1	AE	DJ		B	LOGIC(74VHCT14AMTCX)	[IC29]	IC
67	VHiVT574MTC-1	AF	DS		B	LOGIC(74VHCT574AMTCX)	[IC11]	IC
69	VRS-CY1JD270J	AA	DD		C	Resistor(1/16W 27Ω ±5%)	[R51,R38]	抵抗
70	VRS-CZ1JD000J	AA	DD		C	Resistor(1/16W 0Ω ±5%)	[R18,R19,R20,R23,R46]	抵抗
	VRS-CZ1JD000J	AA	DD		C	Resistor(1/16W 0Ω ±5%)	[R97,R212,R140,R142]	抵抗
71	VRS-CZ1JD101J	AA	DD		C	Resistor(1/16W 100Ω ±5%)	[R69,R90,R91,R110]	抵抗
	VRS-CZ1JD101J	AA	DD		C	Resistor(1/16W 100Ω ±5%)	[R124,R172,R185]	抵抗
72	VRS-CZ1JD102J	AA	DD		C	Resistor(1/16W 1KΩ ±5%)	[R13,R14,R27,R31,R32]	抵抗
	VRS-CZ1JD102J	AA	DD		C	Resistor(1/16W 1KΩ ±5%)	[R33,R34,R35,R39,R52]	抵抗
	VRS-CZ1JD102J	AA	DD		C	Resistor(1/16W 1KΩ ±5%)	[R57,R60,R63,R66,R67]	抵抗
	VRS-CZ1JD102J	AA	DD		C	Resistor(1/16W 1KΩ ±5%)	[R75,R93,R111]	抵抗
	VRS-CZ1JD102J	AA	DD		C	Resistor(1/16W 1KΩ ±5%)	[R113,R153,R154]	抵抗
	VRS-CZ1JD102J	AA	DD		C	Resistor(1/16W 1KΩ ±5%)	[R161,R169,R195,R196,R197]	抵抗
	VRS-CZ1JD102J	AA	DD		C	Resistor(1/16W 1KΩ ±5%)	[R202,R206,R207,R209,R210]	抵抗
	VRS-CZ1JD102J	AA	DD		C	Resistor(1/16W 1KΩ ±5%)	[R213,R214]	抵抗
73	VRS-CZ1JD103F	AA	DD		C	Resistor(1/16W 10KΩ ±1%)	[R199]	抵抗
74	VRS-CZ1JD103J	AA	DD		C	Resistor(1/16W 10KΩ ±5%)	[R47,R78,R125,R149,R150]	抵抗
	VRS-CZ1JD103J	AA	DD		C	Resistor(1/16W 10KΩ ±5%)	[R151,R152,R170,R175]	抵抗
75	VRS-CZ1JD104F	AA	DD		C	Resistor(1/16W 100KΩ ±1%)	[R130,R131,R198]	抵抗
76	VRS-CZ1JD104J	AA	DD		C	Resistor(1/16W 100KΩ ±5%)	[R42,R54,R56,R61,R70]	抵抗
	VRS-CZ1JD104J	AA	DD		C	Resistor(1/16W 100KΩ ±5%)	[R101,R116,R117]	抵抗
	VRS-CZ1JD104J	AA	DD		C	Resistor(1/16W 100KΩ ±5%)	[R145,R146]	抵抗
	VRS-CZ1JD104J	AA	DD		C	Resistor(1/16W 100KΩ ±5%)	[R192]	抵抗
77	VRS-CZ1JD105J	AA	DD		C	Resistor(1/16W 1.0MΩ ±5%)	[R81,R89,R92,R102,R103]	抵抗
	VRS-CZ1JD105J	AA	DD		C	Resistor(1/16W 1.0MΩ ±5%)	[R144]	抵抗
78	VRS-CZ1JD113F	AA	DD		C	Resistor(1/16W 11KΩ ±1%)	[R168]	抵抗
79	VRS-CZ1JD162J	AA	DD		C	Resistor(1.6KJ)(MCR01MZSJ162)	[R5,R106]	抵抗
80	VRS-CZ1JD201J	AA	DD		C	Resistor(1/16W 200Ω ±5%)	[R109]	抵抗
81	VRS-CZ1JD202J	AA	DD		C	Resistor(1/16W 2.0KΩ ±5%)	[R28]	抵抗
82	VRS-CZ1JD221J	AA	DD		C	Resistor(1/16W 220Ω ±5%)	[R147]	抵抗
84	VRS-CZ1JD272J	AA	DD		C	Resistor(1/16W 2.7KΩ ±5%)	[R99]	抵抗
85	VRS-CZ1JD273F	AA	DD		C	Resistor(1/16W 27KΩ ±1%)(MCR01MZSF272)	[R177]	抵抗
86	VRS-CZ1JD303J	AA	DD		C	Resistor(1/16W 30KΩ ±5%)(MCR01MZSJ303)	[R11,R16]	抵抗
	VRS-CZ1JD303J	AA	DD		C	Resistor(1/16W 30KΩ ±5%)(MCR01MZSJ303)	[R77]	抵抗
	VRS-CZ1JD303J	AA	DD		C	Resistor(1/16W 30KΩ ±5%)(MCR01MZSJ303)	[R119,R134]	抵抗
	VRS-CZ1JD303J	AA	DD		C	Resistor(1/16W 30KΩ ±5%)(MCR01MZSJ303)	[R165,R184]	抵抗
87	VRS-CZ1JD330J	AA	DD		C	Resistor(1/16W 33Ω ±5%)	[R50,R76,R82,R85,R95]	抵抗
	VRS-CZ1JD330J	AA	DD		C	Resistor(1/16W 33Ω ±5%)	[R98,R104,R136,R137,R143]	抵抗
	VRS-CZ1JD330J	AA	DD		C	Resistor(1/16W 33Ω ±5%)	[R155,R156,R157,R188,R191]	抵抗
	VRS-CZ1JD330J	AA	DD		C	Resistor(1/16W 33Ω ±5%)	[R193,R43,R64,R68,R41]	抵抗
88	VRS-CZ1JD391J	AA	DD		C	Resistor(1/16W 390Ω ±5%)(MCR01MZSJ391)	[R7,R108]	抵抗
89	VRS-CZ1JD472J	AA	DD		C	Resistor(1/16W 4.7KΩ ±5%)	[R1,R2,R3,R10,R12]	抵抗
	VRS-CZ1JD472J	AA	DD		C	Resistor(1/16W 4.7KΩ ±5%)	[R17,R24,R30,R36,R37]	抵抗
	VRS-CZ1JD472J	AA	DD		C	Resistor(1/16W 4.7KΩ ±5%)	[R40,R44,R45,R49,R53]	抵抗
	VRS-CZ1JD472J	AA	DD		C	Resistor(1/16W 4.7KΩ ±5%)	[R55,R58,R59,R62,R65]	抵抗
	VRS-CZ1JD472J	AA	DD		C	Resistor(1/16W 4.7KΩ ±5%)	[R72,R73,R80,R83,R87]	抵抗
	VRS-CZ1JD472J	AA	DD		C	Resistor(1/16W 4.7KΩ ±5%)	[R88,R112,R114,R118,R121]	抵抗
	VRS-CZ1JD472J	AA	DD		C	Resistor(1/16W 4.7KΩ ±5%)	[R122,R128,R133]	抵抗

51 PCU 基板 (PCU PWB)

NO.	PARTS CODE	PRICE RANK Ex.	PRICE RANK Ja.	NEW MARK	PART RANK	DESCRIPTION
	VRS-CZ1JD472J	AA	DD		C	Resistor(1/16W 4.7KΩ ±5%) [R148,R158] 抵抗
	VRS-CZ1JD472J	AA	DD		C	Resistor(1/16W 4.7KΩ ±5%) [R162,R171,R174] 抵抗
89	VRS-CZ1JD472J	AA	DD		C	Resistor(1/16W 4.7KΩ ±5%) [R176,R186] 抵抗
	VRS-CZ1JD472J	AA	DD		C	Resistor(1/16W 4.7KΩ ±5%) [R187,R194,R201] 抵抗
	VRS-CZ1JD472J	AA	DD		C	Resistor(1/16W 4.7KΩ ±5%) [R203,R204] 抵抗
	VRS-CZ1JD472J	AA	DD		C	Resistor(1/16W 4.7KΩ ±5%) [R205,R208,R211] 抵抗
90	VRS-CZ1JD473J	AA	DD		C	Resistor(1/16W 47KΩ ±5%) [R86,R129,R189,R190] 抵抗
91	VRS-CZ1JD622J	AA	DD		C	Resistor(1/16W 6.2KΩ ±5%)(MCR01MZSJ622) [R74] 抵抗
93	VRS-CZ1JD821J	AA	DD		C	Resistor(1/16W 820Ω ±5%)(MCR01MZSJ821) [R107] 抵抗
94	VRS-TP2BD1R0J	AA	DD		C	Resistor(1/8W 1.0Ω ±5%) [R178,R179,R180,R181,R182] 抵抗
	VRS-TP2BD1R0J	AA	DD		C	Resistor(1/8W 1.0Ω ±5%) [R183] 抵抗
96	VS2SA1576A/-1	AB	DJ		B	Transistor(2SA1576A) [Q3,Q4,Q5,Q8] ﾄﾗﾝｼﾞｽﾀｰ
97	VS2SC2412K/-1	AB	DD		B	Transistor(2SC2412K) [Q39,Q35] ﾄﾗﾝｼﾞｽﾀｰ
98	VSDTA114YUA-1	AC	DJ		B	Transistor(DTA114YUA) [Q30,Q31,Q36,Q40,Q53,Q58] ﾄﾗﾝｼﾞｽﾀｰ
99	VSDTA144EUA-1	AC	DJ		B	Transistor(DTA144EUA) [Q49] ﾄﾗﾝｼﾞｽﾀｰ
	VSDTC114YUA-1	AB	DJ		B	Transistor(DTC114YUA) [Q2,Q9,Q10,Q11,Q12] ﾄﾗﾝｼﾞｽﾀｰ
	VSDTC114YUA-1	AB	DJ		B	Transistor(DTC114YUA) [Q13,Q14,Q15,Q16,Q18] ﾄﾗﾝｼﾞｽﾀｰ
	VSDTC114YUA-1	AB	DJ		B	Transistor(DTC114YUA) [Q19,Q20,Q21,Q22,Q23] ﾄﾗﾝｼﾞｽﾀｰ
100	VSDTC114YUA-1	AB	DJ		B	Transistor(DTC114YUA) [Q24,Q25,Q26,Q27,Q28] ﾄﾗﾝｼﾞｽﾀｰ
	VSDTC114YUA-1	AB	DJ		B	Transistor(DTC114YUA) [Q33,Q34,Q37,Q38] ﾄﾗﾝｼﾞｽﾀｰ
	VSDTC114YUA-1	AB	DJ		B	Transistor(DTC114YUA) [Q45,Q47] ﾄﾗﾝｼﾞｽﾀｰ
	VSDTC114YUA-1	AB	DJ		B	Transistor(DTC114YUA) [Q48,Q50,Q51,Q52,Q54] ﾄﾗﾝｼﾞｽﾀｰ
	VSDTC114YUA-1	AB	DJ		B	Transistor(DTC114YUA) [Q55,Q56,Q57,Q59] ﾄﾗﾝｼﾞｽﾀｰ
	(Unit)					
901	CPWBN1544DS51	BR	LX	N	E	PCU PWB UNIT PCU 基板ﾕﾆｯﾄ

52 MFPC2 基板 (MFPC2 PWB)

NO.	PARTS CODE	PRICE RANK Ex.	PRICE RANK Ja.	NEW MARK	PART RANK	DESCRIPTION
1	QCNCM0923FC10	AE	DJ		C	Connector(10pin) [CN9] ｺﾈｸﾀｰ
2	QCNCM0923FC14	AE	DJ		C	Connector(14pin) [CN10] ｺﾈｸﾀｰ
3	QCNCM0923FC16	AF	DS		C	Connector(16pin) [CN11] ｺﾈｸﾀｰ
4	QCNCM0923FC24	AF	DS		C	Connector(24pin) [CN12] ｺﾈｸﾀｰ
5	QCNCM0991FCZZ	AG	DX		C	Connector(30FMZ-BT) [CN3,CN13] ｺﾈｸﾀｰ
6	QCNCM1069AC1J	AD	DJ		C	Connector(10pin) [CN7] ｺﾈｸﾀｰ
7	QCNCM7014SC0F	AB	DD		C	Connector(6pin) [CN6] ｺﾈｸﾀｰ
8	QCNCW1157FCZZ	AB	DJ		C	Connector(IMSA-9604S-05C) [CN8] ｺﾈｸﾀｰ
9	QCNCW1169FCZZ	AG	DS		C	Connector(26FMZ-BT) [CN5] ｺﾈｸﾀｰ
10	QCNCW5380NCZZ	AC	DJ		C	Connector(B4B-PH-K-S) [CN14] ｺﾈｸﾀｰ
11	QSOCZ0071FCZZ	AP	EQ		C	Socket(MM20-72B1-1) [SOCKET1,SOCKET2] ｿｹｯﾄ
12	QSOCZ6428ACZZ	AE	DS		C	IC socket(28pin) [IC51] IC ｿｹｯﾄ
13	RCRSQ0072FCZZ	AF	DS		B	Crystal(22.1184MHz)(AT-51) [X1] ｸﾘｽﾀﾙ
14	RCRSQ0073FCZZ	AF	DS		B	Crystal(21.47727MHz)(AT-51) [X3] ｸﾘｽﾀﾙ
15	RCRSQ0074FCZZ	AF	DS		B	Crystal(25.69930MHz)(AT-51) [X4] ｸﾘｽﾀﾙ
16	RCRSZ0001QSZZ	AG	DS		B	Crystal(AT-51(19.6608MHz)) [X2] ｸﾘｽﾀﾙ
17	RFiLN0046FCZZ	AH	DX		C	Noise filter(ZJSC-R47121) [NF20] ﾉｲｽﾞﾌｨﾙﾀ
18	RFiLZ1042LCZZ	AC	DJ		C	Filter(1000pF) [NF3,NF10,NF11,NF13,NF15] ﾌｨﾙﾀｰ
	RFiLZ1042LCZZ	AC	DJ		C	Filter(1000pF) [NF16] ﾌｨﾙﾀｰ
	RFiLZ1043LCZZ	AC	DJ		C	Filter(33000pF) [NF5,NF6,NF8,NF9,NF17] ﾌｨﾙﾀｰ
	RFiLZ1043LCZZ	AC	DJ		C	Filter(33000pF) [NF18,NF19,NF21,NF22] ﾌｨﾙﾀｰ
19	RFiLZ1043LCZZ	AC	DJ		C	Filter(33000pF) [NF23,NF24,NF25,NF26,NF27] ﾌｨﾙﾀｰ
	RFiLZ1043LCZZ	AC	DJ		C	Filter(33000pF) [NF28,NF34,NF36,NF37,NF38] ﾌｨﾙﾀｰ
	RFiLZ1043LCZZ	AC	DJ		C	Filter(33000pF) [NF39] ﾌｨﾙﾀｰ
20	RH-iX0003QSZZ	AQ	EQ		B	IC(SRAM)(IS61LV256-12J) [IC41,IC33] IC(SRAM)
21	RH-iX3103YAZZ	AG	DS		B	REGURATOR(L1087MPX_ADJ) [IC1,IC12,IC18,IC43,IC57] IC
	RMPTC4103QCJJ	AC	DD		B	Block resistor(10KΩ×4) [BR52,BR53,BR54,BR55,BR67] ﾌﾞﾛｯｸﾃｲｺｳ
	RMPTC4103QCJJ	AC	DD		B	Block resistor(10KΩ×4) [BR68,BR69,BR73,BR74,BR75] ﾌﾞﾛｯｸﾃｲｺｳ
	RMPTC4103QCJJ	AC	DD		B	Block resistor(10KΩ×4) [BR79,BR80,BR81,BR82,BR83] ﾌﾞﾛｯｸﾃｲｺｳ
22	RMPTC4103QCJJ	AC	DD		B	Block resistor(10KΩ×4) [BR84,BR95,BR98,BR99,BR101] ﾌﾞﾛｯｸﾃｲｺｳ
	RMPTC4103QCJJ	AC	DD		B	Block resistor(10KΩ×4) [BR102,BR103,BR105,BR107] ﾌﾞﾛｯｸﾃｲｺｳ
	RMPTC4103QCJJ	AC	DD		B	Block resistor(10KΩ×4) [BR109,BR111,BR113,BR117] ﾌﾞﾛｯｸﾃｲｺｳ
	RMPTC4103QCJJ	AC	DD		B	Block resistor(10KΩ×4) [BR118,BR120,BR122,BR124] ﾌﾞﾛｯｸﾃｲｺｳ
	RMPTC4330QCJJ	AC	DD		B	Block resistor(33Ω×4) [BR1,BR2,BR3,BR4,BR5,BR6] ﾌﾞﾛｯｸﾃｲｺｳ
	RMPTC4330QCJJ	AC	DD		B	Block resistor(33Ω×4) [BR7,BR8,BR9,BR10,BR20] ﾌﾞﾛｯｸﾃｲｺｳ
	RMPTC4330QCJJ	AC	DD		B	Block resistor(33Ω×4) [BR21,BR22,BR23,BR24,BR25] ﾌﾞﾛｯｸﾃｲｺｳ
	RMPTC4330QCJJ	AC	DD		B	Block resistor(33Ω×4) [BR26,BR27,BR28,BR29,BR30] ﾌﾞﾛｯｸﾃｲｺｳ
	RMPTC4330QCJJ	AC	DD		B	Block resistor(33Ω×4) [BR31,BR32,BR33,BR38,BR39] ﾌﾞﾛｯｸﾃｲｺｳ
	RMPTC4330QCJJ	AC	DD		B	Block resistor(33Ω×4) [BR40,BR41,BR42,BR43,BR44] ﾌﾞﾛｯｸﾃｲｺｳ
23	RMPTC4330QCJJ	AC	DD		B	Block resistor(33Ω×4) [BR45,BR46,BR47,BR48,BR49] ﾌﾞﾛｯｸﾃｲｺｳ
	RMPTC4330QCJJ	AC	DD		B	Block resistor(33Ω×4) [BR50,BR51,BR56,BR57,BR58] ﾌﾞﾛｯｸﾃｲｺｳ
	RMPTC4330QCJJ	AC	DD		B	Block resistor(33Ω×4) [BR59,BR60,BR61,BR62,BR63] ﾌﾞﾛｯｸﾃｲｺｳ
	RMPTC4330QCJJ	AC	DD		B	Block resistor(33Ω×4) [BR65,BR66,BR70,BR71,BR72] ﾌﾞﾛｯｸﾃｲｺｳ
	RMPTC4330QCJJ	AC	DD		B	Block resistor(33Ω×4) [BR76,BR77,BR78,BR85,BR86] ﾌﾞﾛｯｸﾃｲｺｳ
	RMPTC4330QCJJ	AC	DD		B	Block resistor(33Ω×4) [BR87,BR88,BR89,BR90,BR91] ﾌﾞﾛｯｸﾃｲｺｳ
	RMPTC4330QCJJ	AC	DD		B	Block resistor(33Ω×4) [BR92,BR93,BR94,BR96,BR97] ﾌﾞﾛｯｸﾃｲｺｳ
	RMPTC4330QCJJ	AC	DD		B	Block resistor(33Ω×4) [BR100,BR104,BR106,BR108] ﾌﾞﾛｯｸﾃｲｺｳ

52 MFPC2 基板 (MFPC2 PWB)

NO.	PARTS CODE	PRICE RANK		NEW MARK	PART RANK	DESCRIPTION	
		Ex.	Ja.				
	RMPTC4330QCJJ	AC	DD		B	Block resistor(33Ω×4)	[BR110,BR112,BR114,BR115] ﾌﾞﾛｯｸﾃｲｺｳ
23	RMPTC4330QCJJ	AC	DD		B	Block resistor(33Ω×4)	[BR116,BR119,BR121,BR123] ﾌﾞﾛｯｸﾃｲｺｳ
	RMPTC4330QCJJ	AC	DD		B	Block resistor(33Ω×4)	[BR125,BR127,BR128,BR129] ﾌﾞﾛｯｸﾃｲｺｳ
	RMPTC4330QCJJ	AC	DD		B	Block resistor(33Ω×4)	[BR130,BR131,BR132,BR133] ﾌﾞﾛｯｸﾃｲｺｳ
	RMPTC4473QCJJ	AC	DD		B	Block resistor(47KΩ×4)	[BR15,BR16,BR17,BR18,BR19] ﾌﾞﾛｯｸﾃｲｺｳ
24	RMPTC4473QCJJ	AC	DD		B	Block resistor(47KΩ×4)	[BR34,BR35,BR36,BR37,BR64] ﾌﾞﾛｯｸﾃｲｺｳ
	RMPTC4473QCJJ	AC	DD		B	Block resistor(47KΩ×4)	[BR126] ﾌﾞﾛｯｸﾃｲｺｳ
25	VCCCCZ1HH150J	AA	DD		C	Capacitor(50WV 15pF)	[C315,C316] ｺﾝﾃﾞﾝｻｰ
26	VCCCCZ1HH220J	AA	DD		C	Capacitor(50WV 22pF)	[C260,C262,C391] ｺﾝﾃﾞﾝｻｰ
	VCCCCZ1HH220J	AA	DD		C	Capacitor(50WV 22pF)	[C421,C454,C455] ｺﾝﾃﾞﾝｻｰ
	VCEAEA0JW107M	AA	DD		C	Capacitor(6.3WV 100μF)	[C10,C14,C30,C33,C59,C60] ｺﾝﾃﾞﾝｻｰ
	VCEAEA0JW107M	AA	DD		C	Capacitor(6.3WV 100μF)	[C70,C71,C187,C191,C194] ｺﾝﾃﾞﾝｻｰ
	VCEAEA0JW107M	AA	DD		C	Capacitor(6.3WV 100μF)	[C195,C268,C285,C289,C294] ｺﾝﾃﾞﾝｻｰ
27	VCEAEA0JW107M	AA	DD		C	Capacitor(6.3WV 100μF)	[C296,C299,C300,C314,C325] ｺﾝﾃﾞﾝｻｰ
	VCEAEA0JW107M	AA	DD		C	Capacitor(6.3WV 100μF)	[C334,C361,C371,C379,C380] ｺﾝﾃﾞﾝｻｰ
	VCEAEA0JW107M	AA	DD		C	Capacitor(6.3WV 100μF)	[C401,C405,C409,C444,C447] ｺﾝﾃﾞﾝｻｰ
	VCEAEA0JW107M	AA	DD		C	Capacitor(6.3WV 100μF)	[C451,C574] ｺﾝﾃﾞﾝｻｰ
28	VCEAGA1AW476M	AA	DD		C	Capacitor(10WV 47μF)	[C224,C393,C425,C461,C462] ｺﾝﾃﾞﾝｻｰ
	VCEAGA1AW476M	AA	DD		C	Capacitor(10WV 47μF)	[C463,C464,C465,C466] ｺﾝﾃﾞﾝｻｰ
29	VCEAGA1AW477M	AB	DD		C	Capacitor(10WV 470μF)	[C4,C5,C62,C64,C220,C222] ｺﾝﾃﾞﾝｻｰ
	VCEAGA1AW477M	AB	DD		C	Capacitor(10WV 470μF)	[C305,C307,C395,C429,C474] ｺﾝﾃﾞﾝｻｰ
30	VCEAGA1CW106M	AA	DD		C	Capacitor(16WV 10μF)	[C6,C61,C150,C225,C426] ｺﾝﾃﾞﾝｻｰ
	VCEAGA1CW106M	AA	DD		C	Capacitor(16WV 10μF)	[C572,C573] ｺﾝﾃﾞﾝｻｰ
31	VCEAGA1CW107M	AC	DD		C	Capacitor(100μF/16V)	[C411,C446] ｺﾝﾃﾞﾝｻｰ
32	VCEAGA1HW224M	AA	DD		C	Capacitor(50WV 0.22μF)	[C357,C399] ｺﾝﾃﾞﾝｻｰ
33	VCEAGA1VW107M	AB	DD		C	Capacitor(35WV 100μF)	[C410,C570] ｺﾝﾃﾞﾝｻｰ
34	VCEAGA1VW227M	AB	DD		C	Capacitor(35WV 220μF)	[C352,C398,C404,C438,C478] ｺﾝﾃﾞﾝｻｰ
	VCEAGA1VW227M	AB	DD		C	Capacitor(35WV 220μF)	[C569] ｺﾝﾃﾞﾝｻｰ
35	VCKYCY1HF223Z	AA	DD		C	Capacitor(50WV 0.022μF)	[C212,C400,C427,C483,C364] ｺﾝﾃﾞﾝｻｰ
	VCKYCZ1CF104Z	AB	DD		C	Capacitor(16WV 0.1μF)	[C3,C7,C8,C9,C11,C12,C13] ｺﾝﾃﾞﾝｻｰ
	VCKYCZ1CF104Z	AB	DD		C	Capacitor(16WV 0.1μF)	[C15,C16,C17,C18,C19,C20] ｺﾝﾃﾞﾝｻｰ
	VCKYCZ1CF104Z	AB	DD		C	Capacitor(16WV 0.1μF)	[C21,C22,C23,C24,C25,C26] ｺﾝﾃﾞﾝｻｰ
	VCKYCZ1CF104Z	AB	DD		C	Capacitor(16WV 0.1μF)	[C27,C28,C29,C34,C35,C36] ｺﾝﾃﾞﾝｻｰ
	VCKYCZ1CF104Z	AB	DD		C	Capacitor(16WV 0.1μF)	[C37,C38,C39,C40,C41,C42] ｺﾝﾃﾞﾝｻｰ
	VCKYCZ1CF104Z	AB	DD		C	Capacitor(16WV 0.1μF)	[C43,C44,C45,C46,C47,C48] ｺﾝﾃﾞﾝｻｰ
	VCKYCZ1CF104Z	AB	DD		C	Capacitor(16WV 0.1μF)	[C49,C50,C51,C52,C53,C54] ｺﾝﾃﾞﾝｻｰ
	VCKYCZ1CF104Z	AB	DD		C	Capacitor(16WV 0.1μF)	[C55,C56,C57,C58,C63,C65] ｺﾝﾃﾞﾝｻｰ
	VCKYCZ1CF104Z	AB	DD		C	Capacitor(16WV 0.1μF)	[C72,C73,C74,C75,C76,C77] ｺﾝﾃﾞﾝｻｰ
	VCKYCZ1CF104Z	AB	DD		C	Capacitor(16WV 0.1μF)	[C78,C79,C80,C81,C82,C83] ｺﾝﾃﾞﾝｻｰ
	VCKYCZ1CF104Z	AB	DD		C	Capacitor(16WV 0.1μF)	[C84,C85,C86,C87,C88,C89] ｺﾝﾃﾞﾝｻｰ
	VCKYCZ1CF104Z	AB	DD		C	Capacitor(16WV 0.1μF)	[C90,C91,C92,C93,C94,C95] ｺﾝﾃﾞﾝｻｰ
	VCKYCZ1CF104Z	AB	DD		C	Capacitor(16WV 0.1μF)	[C97,C99,C100,C102,C103] ｺﾝﾃﾞﾝｻｰ
	VCKYCZ1CF104Z	AB	DD		C	Capacitor(16WV 0.1μF)	[C104,C105,C106,C107,C108] ｺﾝﾃﾞﾝｻｰ
	VCKYCZ1CF104Z	AB	DD		C	Capacitor(16WV 0.1μF)	[C109,C111,C112,C113,C114] ｺﾝﾃﾞﾝｻｰ
	VCKYCZ1CF104Z	AB	DD		C	Capacitor(16WV 0.1μF)	[C115,C116,C117,C118,C119] ｺﾝﾃﾞﾝｻｰ
	VCKYCZ1CF104Z	AB	DD		C	Capacitor(16WV 0.1μF)	[C120,C121,C122,C123,C124] ｺﾝﾃﾞﾝｻｰ
	VCKYCZ1CF104Z	AB	DD		C	Capacitor(16WV 0.1μF)	[C125,C126,C127,C128,C129] ｺﾝﾃﾞﾝｻｰ
	VCKYCZ1CF104Z	AB	DD		C	Capacitor(16WV 0.1μF)	[C130,C131,C132,C133,C134] ｺﾝﾃﾞﾝｻｰ
	VCKYCZ1CF104Z	AB	DD		C	Capacitor(16WV 0.1μF)	[C135,C136,C137,C138,C139] ｺﾝﾃﾞﾝｻｰ
	VCKYCZ1CF104Z	AB	DD		C	Capacitor(16WV 0.1μF)	[C140,C141,C142,C149,C151] ｺﾝﾃﾞﾝｻｰ
	VCKYCZ1CF104Z	AB	DD		C	Capacitor(16WV 0.1μF)	[C152,C153,C154,C155,C156] ｺﾝﾃﾞﾝｻｰ
	VCKYCZ1CF104Z	AB	DD		C	Capacitor(16WV 0.1μF)	[C157,C158,C159,C160,C161] ｺﾝﾃﾞﾝｻｰ
	VCKYCZ1CF104Z	AB	DD		C	Capacitor(16WV 0.1μF)	[C162,C163,C164,C165,C166] ｺﾝﾃﾞﾝｻｰ
	VCKYCZ1CF104Z	AB	DD		C	Capacitor(16WV 0.1μF)	[C167,C168,C169,C171,C172] ｺﾝﾃﾞﾝｻｰ
36	VCKYCZ1CF104Z	AB	DD		C	Capacitor(16WV 0.1μF)	[C173,C174,C175,C176,C182] ｺﾝﾃﾞﾝｻｰ
	VCKYCZ1CF104Z	AB	DD		C	Capacitor(16WV 0.1μF)	[C183,C184,C185,C186,C188] ｺﾝﾃﾞﾝｻｰ
	VCKYCZ1CF104Z	AB	DD		C	Capacitor(16WV 0.1μF)	[C189,C190,C192,C193,C197] ｺﾝﾃﾞﾝｻｰ
	VCKYCZ1CF104Z	AB	DD		C	Capacitor(16WV 0.1μF)	[C198,C199,C200,C201,C202] ｺﾝﾃﾞﾝｻｰ
	VCKYCZ1CF104Z	AB	DD		C	Capacitor(16WV 0.1μF)	[C203,C205,C206,C207,C208] ｺﾝﾃﾞﾝｻｰ
	VCKYCZ1CF104Z	AB	DD		C	Capacitor(16WV 0.1μF)	[C209,C210,C211,C216,C218] ｺﾝﾃﾞﾝｻｰ
	VCKYCZ1CF104Z	AB	DD		C	Capacitor(16WV 0.1μF)	[C221,C223,C228,C230,C231] ｺﾝﾃﾞﾝｻｰ
	VCKYCZ1CF104Z	AB	DD		C	Capacitor(16WV 0.1μF)	[C234,C236,C237,C244,C246] ｺﾝﾃﾞﾝｻｰ
	VCKYCZ1CF104Z	AB	DD		C	Capacitor(16WV 0.1μF)	[C248,C249,C250,C252] ｺﾝﾃﾞﾝｻｰ
	VCKYCZ1CF104Z	AB	DD		C	Capacitor(16WV 0.1μF)	[C254,C261,C263,C267] ｺﾝﾃﾞﾝｻｰ
	VCKYCZ1CF104Z	AB	DD		C	Capacitor(16WV 0.1μF)	[C269,C270,C271,C275,C277] ｺﾝﾃﾞﾝｻｰ
	VCKYCZ1CF104Z	AB	DD		C	Capacitor(16WV 0.1μF)	[C278,C279,C280,C281,C282] ｺﾝﾃﾞﾝｻｰ
	VCKYCZ1CF104Z	AB	DD		C	Capacitor(16WV 0.1μF)	[C283,C284,C286,C287,C288] ｺﾝﾃﾞﾝｻｰ
	VCKYCZ1CF104Z	AB	DD		C	Capacitor(16WV 0.1μF)	[C290,C291,C292,C293,C295] ｺﾝﾃﾞﾝｻｰ
	VCKYCZ1CF104Z	AB	DD		C	Capacitor(16WV 0.1μF)	[C297,C298,C304,C306] ｺﾝﾃﾞﾝｻｰ
	VCKYCZ1CF104Z	AB	DD		C	Capacitor(16WV 0.1μF)	[C313,C318,C319,C320,C321] ｺﾝﾃﾞﾝｻｰ
	VCKYCZ1CF104Z	AB	DD		C	Capacitor(16WV 0.1μF)	[C322,C324,C327,C328,C329] ｺﾝﾃﾞﾝｻｰ
	VCKYCZ1CF104Z	AB	DD		C	Capacitor(16WV 0.1μF)	[C333,C335,C336,C337,C339] ｺﾝﾃﾞﾝｻｰ
	VCKYCZ1CF104Z	AB	DD		C	Capacitor(16WV 0.1μF)	[C340,C341,C342,C343,C344] ｺﾝﾃﾞﾝｻｰ
	VCKYCZ1CF104Z	AB	DD		C	Capacitor(16WV 0.1μF)	[C345,C346,C347,C348,C350] ｺﾝﾃﾞﾝｻｰ
	VCKYCZ1CF104Z	AB	DD		C	Capacitor(16WV 0.1μF)	[C351,C358,C359,C360,C362] ｺﾝﾃﾞﾝｻｰ
	VCKYCZ1CF104Z	AB	DD		C	Capacitor(16WV 0.1μF)	[C363,C366,C367,C368,C369] ｺﾝﾃﾞﾝｻｰ
	VCKYCZ1CF104Z	AB	DD		C	Capacitor(16WV 0.1μF)	[C370,C373,C375,C381,C382] ｺﾝﾃﾞﾝｻｰ
	VCKYCZ1CF104Z	AB	DD		C	Capacitor(16WV 0.1μF)	[C383,C384,C385,C386,C387] ｺﾝﾃﾞﾝｻｰ
	VCKYCZ1CF104Z	AB	DD		C	Capacitor(16WV 0.1μF)	[C388,C389,C390,C392,C394] ｺﾝﾃﾞﾝｻｰ
	VCKYCZ1CF104Z	AB	DD		C	Capacitor(16WV 0.1μF)	[C396,C397,C402,C403,C407] ｺﾝﾃﾞﾝｻｰ

52 MFPC2 基板 (MFPC2 PWB)

NO.	PARTS CODE	PRICE RANK		NEW MARK	PART RANK	DESCRIPTION		
		Ex.	Ja.					
36	VCKYCZ1CF104Z	AB	DD		C	Capacitor(16WV 0.1μF)	[C408,C412,C413,C414,C415]	ｺﾝﾃﾞﾝｻｰ
	VCKYCZ1CF104Z	AB	DD		C	Capacitor(16WV 0.1μF)	[C416,C417,C419,C420,C423]	ｺﾝﾃﾞﾝｻｰ
	VCKYCZ1CF104Z	AB	DD		C	Capacitor(16WV 0.1μF)	[C424,C428,C430,C431,C432]	ｺﾝﾃﾞﾝｻｰ
	VCKYCZ1CF104Z	AB	DD		C	Capacitor(16WV 0.1μF)	[C439,C440,C445,C448,C449]	ｺﾝﾃﾞﾝｻｰ
	VCKYCZ1CF104Z	AB	DD		C	Capacitor(16WV 0.1μF)	[C450,C452,C453,C458,C460]	ｺﾝﾃﾞﾝｻｰ
	VCKYCZ1CF104Z	AB	DD		C	Capacitor(16WV 0.1μF)	[C467,C468,C475,C479,C482]	ｺﾝﾃﾞﾝｻｰ
	VCKYCZ1CF104Z	AB	DD		C	Capacitor(16WV 0.1μF)	[C485,C487,C488,C490,C491]	ｺﾝﾃﾞﾝｻｰ
	VCKYCZ1CF104Z	AB	DD		C	Capacitor(16WV 0.1μF)	[C492,C493,C494,C496,C497]	ｺﾝﾃﾞﾝｻｰ
	VCKYCZ1CF104Z	AB	DD		C	Capacitor(16WV 0.1μF)	[C498,C499,C500,C501,C503]	ｺﾝﾃﾞﾝｻｰ
	VCKYCZ1CF104Z	AB	DD		C	Capacitor(16WV 0.1μF)	[C505,C506,C507,C509,C510]	ｺﾝﾃﾞﾝｻｰ
	VCKYCZ1CF104Z	AB	DD		C	Capacitor(16WV 0.1μF)	[C513,C514,C515,C516,C517]	ｺﾝﾃﾞﾝｻｰ
	VCKYCZ1CF104Z	AB	DD		C	Capacitor(16WV 0.1μF)	[C518,C520,C521,C522,C523]	ｺﾝﾃﾞﾝｻｰ
	VCKYCZ1CF104Z	AB	DD		C	Capacitor(16WV 0.1μF)	[C524,C525,C527,C529,C530]	ｺﾝﾃﾞﾝｻｰ
	VCKYCZ1CF104Z	AB	DD		C	Capacitor(16WV 0.1μF)	[C531,C533,C534,C537,C538]	ｺﾝﾃﾞﾝｻｰ
	VCKYCZ1CF104Z	AB	DD		C	Capacitor(16WV 0.1μF)	[C539,C540,C541,C542,C544]	ｺﾝﾃﾞﾝｻｰ
	VCKYCZ1CF104Z	AB	DD		C	Capacitor(16WV 0.1μF)	[C545,C546,C547,C548,C549]	ｺﾝﾃﾞﾝｻｰ
	VCKYCZ1CF104Z	AB	DD		C	Capacitor(16WV 0.1μF)	[C551,C553,C554,C555,C557]	ｺﾝﾃﾞﾝｻｰ
	VCKYCZ1CF104Z	AB	DD		C	Capacitor(16WV 0.1μF)	[C558,C560,C579,C580]	ｺﾝﾃﾞﾝｻｰ
37	VCKYCZ1EB472K	AA	DD		C	Capacitor(25WV 4700p(1005))	[C470]	ｺﾝﾃﾞﾝｻｰ
38	VCKYCZ1HB102K	AA	DD		C	Capacitor(50WV 1000pF)	[C110,C144,C145,C146,C170]	ｺﾝﾃﾞﾝｻｰ
	VCKYCZ1HB102K	AA	DD		C	Capacitor(50WV 1000pF)	[C196,C204,C213,C214,C215]	ｺﾝﾃﾞﾝｻｰ
	VCKYCZ1HB102K	AA	DD		C	Capacitor(50WV 1000pF)	[C217,C219,C238,C247,C251]	ｺﾝﾃﾞﾝｻｰ
	VCKYCZ1HB102K	AA	DD		C	Capacitor(50WV 1000pF)	[C253,C255,C256,C257,C259]	ｺﾝﾃﾞﾝｻｰ
	VCKYCZ1HB102K	AA	DD		C	Capacitor(50WV 1000pF)	[C301,C302,C303,C323]	ｺﾝﾃﾞﾝｻｰ
	VCKYCZ1HB102K	AA	DD		C	Capacitor(50WV 1000pF)	[C326,C331,C338,C353,C354]	ｺﾝﾃﾞﾝｻｰ
	VCKYCZ1HB102K	AA	DD		C	Capacitor(50WV 1000pF)	[C355,C356,C372,C374]	ｺﾝﾃﾞﾝｻｰ
	VCKYCZ1HB102K	AA	DD		C	Capacitor(50WV 1000pF)	[C406,C418,C433,C434,C435]	ｺﾝﾃﾞﾝｻｰ
	VCKYCZ1HB102K	AA	DD		C	Capacitor(50WV 1000pF)	[C436,C441,C442,C471,C473]	ｺﾝﾃﾞﾝｻｰ
	VCKYCZ1HB102K	AA	DD		C	Capacitor(50WV 1000pF)	[C476,C477,C486,C504,C528]	ｺﾝﾃﾞﾝｻｰ
	VCKYCZ1HB102K	AA	DD		C	Capacitor(50WV 1000pF)	[C552,C561,C562,C563,C564]	ｺﾝﾃﾞﾝｻｰ
	VCKYCZ1HB102K	AA	DD		C	Capacitor(50WV 1000pF)	[C565,C566,C567,C568]	ｺﾝﾃﾞﾝｻｰ
	VCKYCZ1HB102K	AA	DD		C	Capacitor(50WV 1000pF)	[C1,C2,C66,C67,C68]	ｺﾝﾃﾞﾝｻｰ
	VCKYCZ1HB102K	AA	DD		C	Capacitor(50WV 1000pF)	[C308,C365]	ｺﾝﾃﾞﾝｻｰ
39	VCKYCZ1HF103Z	AA	DD		C	Capacitor(0.01μF/50V)	[C143,C147,C148,C226,C227]	ｺﾝﾃﾞﾝｻｰ
	VCKYCZ1HF103Z	AA	DD		C	Capacitor(0.01μF/50V)	[C229,C232,C233,C235,C312]	ｺﾝﾃﾞﾝｻｰ
	VCKYCZ1HF103Z	AA	DD		C	Capacitor(0.01μF/50V)	[C349,C437,C443,C480,C571]	ｺﾝﾃﾞﾝｻｰ
40	VCKYTQ0JF106Z	AD	DJ		C	Capacitor(6.3WV 10μF)	[C484,C489,C495,C502,C508]	ｺﾝﾃﾞﾝｻｰ
	VCKYTQ0JF106Z	AD	DJ		C	Capacitor(6.3WV 10μF)	[C512,C519,C526,C532,C536]	ｺﾝﾃﾞﾝｻｰ
	VCKYTQ0JF106Z	AD	DJ		C	Capacitor(6.3WV 10μF)	[C543,C550,C556]	ｺﾝﾃﾞﾝｻｰ
41	VHDDAN202U/-1	AB	DD		B	Diode(DAN202U)	[D1,D2,D7,D8,D11,D15,D18]	ﾀﾞｲｵｰﾄﾞ
	VHDDAN202U/-1	AB	DD		B	Diode(DAN202U)	[D21,D23,D31,D34,D36,D38]	ﾀﾞｲｵｰﾄﾞ
	VHDDAN202U/-1	AB	DD		B	Diode(DAN202U)	[D39,D40,D42,D55,D56,D57]	ﾀﾞｲｵｰﾄﾞ
42	VHDDAP202U/-1	AB	DD		B	Diode(DAP202U)	[D3,D4,D9,D10,D12,D14,D17]	ﾀﾞｲｵｰﾄﾞ
	VHDDAP202U/-1	AB	DD		B	Diode(DAP202U)	[D20,D22,D30,D32,D35,D37]	ﾀﾞｲｵｰﾄﾞ
	VHDDAP202U/-1	AB	DD		B	Diode(DAP202U)	[D41,D43,D44,D45,D52,D53]	ﾀﾞｲｵｰﾄﾞ
	VHDDAP202U/-1	AB	DD		B	Diode(DAP202U)	[D54]	ﾀﾞｲｵｰﾄﾞ
43	VHDDSS133//-1	AA	DD		B	Diode(1SS133)	[D5,D6,D13,D25,D26,D27]	ﾀﾞｲｵｰﾄﾞ
	VHDDSS133//-1	AA	DD		B	Diode(1SS133)	[D28,D29,D33,D60]	ﾀﾞｲｵｰﾄﾞ
44	VHDM1FS4///-1	AD	DJ		B	Diode(M1FS4)	[D46,D47,D48,D49,D50,D51]	ﾀﾞｲｵｰﾄﾞ
	VHDM1FS4///-1	AD	DJ		B	Diode(M1FS4)	[D58,D59]	ﾀﾞｲｵｰﾄﾞ
45	VHDMA704A//-1	AC	DJ		B	Diode(MA704A)	[D16]	ﾀﾞｲｵｰﾄﾞ
46	VHDRA13++++-1	AD	DJ		B	Diode(RA13)	[D24]	ﾀﾞｲｵｰﾄﾞ
47	VHEHZS3B1//-1	AC	DJ		B	Zener diode(HZS3B1)	[ZD1]	ﾂｪﾅｰﾀﾞｲｵｰﾄﾞ
48	VHi161622FH1C	BA	FX		B	FCRAM(MB81E161622)	[IC3,IC5,IC13]	FCRAM
49	VHi61LV6416-1	AX	FG		B	SRAM(IS61LV6416(TSOP))	[IC50]	SRAM
50	VHi74LCX08MTC	AE	DJ		B	IC(74LCX08MTC)	[IC49]	IC
51	VHi74LCX14MTC	AE	DJ		B	IC(74LCX14MTC)	[IC11,IC17,IC22]	IC
	VHi74LCX14MTC	AE	DJ		B	IC(74LCX14MTC)	[IC32,IC39,IC48]	IC
52	VHi74LCX244MT	AM	DX		B	IC(74LCX244MT)	[IC14,IC25,IC27,IC34,IC35]	IC
53	VHi74LCX245MT	AM	DX		B	IC(74LCX245MT)	[IC42]	IC
54	VHi74VHC08/-1	AE	DS		B	IC(74VHC08)	[IC26]	IC
56	VHi90C363A+-1	AU	FG		B	LVDS(DS90C363AMTD)	[IC19]	IC
58	VHiH8S2320+-1	AY	FQ		B	IC(H8S/2320)	[IC31,IC23]	IC
59	VHiHG73C095-1	AY	FQ		B	CCDC(HG73C095TE)	[IC45]	IC
60	VHiHN58V65A-1	AW	FG		B	EEPROM(HN58V65AP)	[IC51]	EEPROM
61	VHiLM358DR+-1	AF	DS		B	IC(LM358D)	[IC16,IC38]	IC
62	VHiLM98513+-1	AY	FQ		B	A/D CONVERTER(LM98513)	[IC54,IC55,IC56]	IC
63	VHiM51957BFP1	AH	DX		B	IC(M51957BFP1)	[IC21,IC40]	IC
64	VHiM87J8310-1	BQ	LP		B	CPT-ASIC(208 QFP)(208 QFP)	[IC15]	IC
65	VHiM87L4240-1	BG	GT		B	ASIC-A(MB87L4240PMT-G-BND(208QFP))	[IC10]	IC
66	VHiM87M1290-1	BZ	TF		B	ASIC-B(MB87M1290PFVS-G-BND(304QFP))	[IC6]	IC
67	VHiMBLV064N-1	BA	FX		B	ROM(NAND (MBM30LV0064-PFTN))	[IC2]	色補正 ROM
68	VHiMTD2007F-1	AU	EZ		B	IC(MTD2007F)	[IC53]	IC
70	VHiSD8M16L1-1	BB	GD		B	SDRAM(HY57V281620HCT-P)	[IC37]	SDRAM
71	VHiTD62003AF/	AE	DS		B	IC(TD62003AF)	[IC44]	IC
72	VHiTD62503F/-	AG	DX		B	IC(TD62503F)	[IC28,IC29]	IC
73	VHiUPD85632-1	BM	HV		B	SCN-ASIC(240 QFP)(240 QFP)	[IC36]	IC
74	VHiUPD85658-1	BV	RB		B	ASIC-C(240 QFP(UPD85658GN-011-LMU))	[IC9]	IC
75	VHPLT1F67AF-1	AC	DJ		B	LED(LT1F67AF)	[LED1,LED2]	LED
76	VRS-CZ1JD000J	AA	DD		C	Resistor(1/16W 0Ω ±5%)	[R48,R57,R62,R110]	抵抗

52 MFPC2 基板 (MFPC2 PWB)

NO.	PARTS CODE	PRICE RANK Ex.	PRICE RANK Ja.	NEW MARK	PART RANK	DESCRIPTION
	VRS-CZ1JD000J	AA	DD		C	Resistor(1/16W 0Ω ±5%) [R88,R144,R170] 抵抗
	VRS-CZ1JD000J	AA	DD		C	Resistor(1/16W 0Ω ±5%) [R171,R180,R198,R199,R200] 抵抗
76	VRS-CZ1JD000J	AA	DD		C	Resistor(1/16W 0Ω ±5%) [R201,R202,R223,R229,R233] 抵抗
	VRS-CZ1JD000J	AA	DD		C	Resistor(1/16W 0Ω ±5%) [R248,R249,R251,R256,R262] 抵抗
	VRS-CZ1JD000J	AA	DD		C	Resistor(1/16W 0Ω ±5%) [R263,R265,R270,R276,R277] 抵抗
	VRS-CZ1JD000J	AA	DD		C	Resistor(1/16W 0Ω ±5%) [R279,R284,R130] 抵抗
77	VRS-CZ1JD101J	AA	DD		C	Resistor(1/16W 100Ω ±5%) [R131] 抵抗
	VRS-CZ1JD102J	AA	DD		C	Resistor(1/16W 1KΩ ±5%) [R1,R2,R4,R15,R16,R25,R90] 抵抗
78	VRS-CZ1JD102J	AA	DD		C	Resistor(1/16W 1KΩ ±5%) [R91,R92,R124,R125,R126] 抵抗
	VRS-CZ1JD102J	AA	DD		C	Resistor(1/16W 1KΩ ±5%) [R127,R184,R186,R235] 抵抗
79	VRS-CZ1JD103F	AA	DD		C	Resistor(1/16W 10KΩ ±1%) [R43] 抵抗
	VRS-CZ1JD103J	AA	DD		C	Resistor(1/16W 10KΩ ±5%) [R12,R26,R27,R28,R45,R51] 抵抗
	VRS-CZ1JD103J	AA	DD		C	Resistor(1/16W 10KΩ ±5%) [R58,R65,R69,R85] 抵抗
	VRS-CZ1JD103J	AA	DD		C	Resistor(1/16W 10KΩ ±5%) [R87,R95,R102] 抵抗
	VRS-CZ1JD103J	AA	DD		C	Resistor(1/16W 10KΩ ±5%) [R111,R113,R115,R128] 抵抗
80	VRS-CZ1JD103J	AA	DD		C	Resistor(1/16W 10KΩ ±5%) [R129,R132,R133,R136,R137] 抵抗
	VRS-CZ1JD103J	AA	DD		C	Resistor(1/16W 10KΩ ±5%) [R138,R140,R156,R157,R158] 抵抗
	VRS-CZ1JD103J	AA	DD		C	Resistor(1/16W 10KΩ ±5%) [R191,R193,R195,R196,R243] 抵抗
	VRS-CZ1JD103J	AA	DD		C	Resistor(1/16W 10KΩ ±5%) [R244,R245,R257,R271,R285] 抵抗
	VRS-CZ1JD103J	AA	DD		C	Resistor(1/16W 10KΩ ±5%) [R288,R289,R291] 抵抗
81	VRS-CZ1JD105J	AA	DD		C	Resistor(1/16W 1.0MΩ ±5%) [R121,R179,R222] 抵抗
	VRS-CZ1JD122J	AA	DD		C	Resistor(1/16W 1.2KΩ ±5%) [R30,R31,R32] 抵抗
83	VRS-CZ1JD122J	AA	DD		C	Resistor(1/16W 1.2KΩ ±5%) [R33,R41,R154] 抵抗
	VRS-CZ1JD122J	AA	DD		C	Resistor(1/16W 1.2KΩ ±5%) [R155] 抵抗
84	VRS-CZ1JD123J	AA	DD		C	Resistor(1/16W 12KΩ ±5%) [R42] 抵抗
85	VRS-CZ1JD133J	AA	DD		C	Resistor(1/16W 13KΩ ±5%) [R231] 抵抗
86	VRS-CZ1JD152J	AA	DD		C	Resistor(1/16W 1.5KΩ ±5%) [R17,R22,R40] 抵抗
88	VRS-CZ1JD203F	AA	DD		C	Resistor(1/16W 20KΩ ±1%) [R44] 抵抗
89	VRS-CZ1JD203J	AA	DD		C	Resistor(1/16W 20KΩ ±5%) [R183,R185,R234] 抵抗
90	VRS-CZ1JD220J	AA	DD		C	Resistor(1/16W 22Ω ±5%) [R162,R166,R167,R168,R206] 抵抗
	VRS-CZ1JD220J	AA	DD		C	Resistor(1/16W 22Ω ±5%) [R209,R211,R212] 抵抗
91	VRS-CZ1JD221J	AA	DD		C	Resistor(1/16W 220Ω ±5%) [R78,R292,R293] 抵抗
92	VRS-CZ1JD242J	AA	DD		C	Resistor(1/16W 2.4KΩ ±5%) [R29,R230,R232] 抵抗
93	VRS-CZ1JD303J	AA	DD		C	Resistor(1/16W 30KΩ ±5%) [R89] 抵抗
	VRS-CZ1JD330J	AA	DD		C	Resistor(1/16W 33Ω ±5%) [R134,R135,R139,R141] 抵抗
94	VRS-CZ1JD330J	AA	DD		C	Resistor(1/16W 33Ω ±5%) [R187,R189] 抵抗
	VRS-CZ1JD330J	AA	DD		C	Resistor(1/16W 33Ω ±5%) [R319,R320,R321,R322,R323] 抵抗
	VRS-CZ1JD330J	AA	DD		C	Resistor(1/16W 33Ω ±5%) [R324,R62,R110] 抵抗
95	VRS-CZ1JD331J	AA	DD		C	Resistor(1/16W 330Ω ±5%) [R123,R150,R221] 抵抗
96	VRS-CZ1JD332F	AA	DD		C	Resistor(1/16W 3.3KΩ ±1%) [R120,R119] 抵抗
	VRS-CZ1JD362J	AA	DD		C	Resistor(1/16W 3.6KΩ ±5%) [R294,R295,R296] 抵抗
	VRS-CZ1JD362J	AA	DD		C	Resistor(1/16W 3.6KΩ ±5%) [R297,R298] 抵抗
	VRS-CZ1JD362J	AA	DD		C	Resistor(1/16W 3.6KΩ ±5%) [R299,R300,R301] 抵抗
97	VRS-CZ1JD362J	AA	DD		C	Resistor(1/16W 3.6KΩ ±5%) [R302,R304] 抵抗
	VRS-CZ1JD362J	AA	DD		C	Resistor(1/16W 3.6KΩ ±5%) [R305,R306,R307] 抵抗
	VRS-CZ1JD362J	AA	DD		C	Resistor(1/16W 3.6KΩ ±5%) [R308,R309] 抵抗
	VRS-CZ1JD362J	AA	DD		C	Resistor(1/16W 3.6KΩ ±5%) [R310,R311,R312] 抵抗
	VRS-CZ1JD470J	AA	DD		C	Resistor(1/16W 47Ω ±5%) [R3,R5,R6,R18,R20,R21,R36] 抵抗
	VRS-CZ1JD470J	AA	DD		C	Resistor(1/16W 47Ω ±5%) [R37,R38,R39,R49,R80,R83] 抵抗
98	VRS-CZ1JD470J	AA	DD		C	Resistor(1/16W 47Ω ±5%) [R84,R86,R116,R142,R159] 抵抗
	VRS-CZ1JD470J	AA	DD		C	Resistor(1/16W 47Ω ±5%) [R192,R194,R204,R205,R214] 抵抗
	VRS-CZ1JD470J	AA	DD		C	Resistor(1/16W 47Ω ±5%) [R220,R226,R227] 抵抗
	VRS-CZ1JD470J	AA	DD		C	Resistor(1/16W 47Ω ±5%) [R325,R326] 抵抗
99	VRS-CZ1JD471J	AA	DD		C	Resistor(1/16W 470Ω ±5%) [R203,R213,R225,R259,R273] 抵抗
	VRS-CZ1JD471J	AA	DD		C	Resistor(1/16W 470Ω ±5%) [R287] 抵抗
100	VRS-CZ1JD472F	AA	DD		C	Resistor(1/16W 4.7kΩ ±1%)(MCR01MZSF472) [R122,R118] 抵抗
	VRS-CZ1JD472J	AA	DD		C	Resistor(1/16W 4.7KΩ ±5%) [R53,R54,R55] 抵抗
	VRS-CZ1JD472J	AA	DD		C	Resistor(1/16W 4.7KΩ ±5%) [R93,R94,R105] 抵抗
101	VRS-CZ1JD472J	AA	DD		C	Resistor(1/16W 4.7KΩ ±5%) [R107,R112,R188] 抵抗
	VRS-CZ1JD472J	AA	DD		C	Resistor(1/16W 4.7KΩ ±5%) [R190,R239] 抵抗
	VRS-CZ1JD472J	AA	DD		C	Resistor(1/16W 4.7KΩ ±5%) [R240,R241,R242] 抵抗
	VRS-CZ1JD473J	AA	DD		C	Resistor(1/16W 47KΩ ±5%) [R19,R59,R60,R61,R81,R114] 抵抗
102	VRS-CZ1JD473J	AA	DD		C	Resistor(1/16W 47KΩ ±5%) [R117,R145,R147,R149,R160] 抵抗
	VRS-CZ1JD473J	AA	DD		C	Resistor(1/16W 47KΩ ±5%) [R161,R164,R165,R169] 抵抗
105	VRS-HT3DAR51J	AC	DD		C	Resistor(2W 0.51Ω ±5%) [R153,R152] 抵抗
106	VS2SB1197//-1	AC	DJ		B	Transistor(2SB1197) [Q22,Q24,Q26] ﾄﾗﾝｼﾞｽﾀｰ
107	VSDTA114EUA-1	AC	DJ		B	Transistor(DTA114EUA) [Q16,Q21,Q28,Q29,Q37] ﾄﾗﾝｼﾞｽﾀｰ
	VSDTC114YUA-1	AB	DJ		B	Transistor(DTC114YUA) [Q1,Q2,Q3,Q4,Q5,Q6,Q8,Q9] ﾄﾗﾝｼﾞｽﾀｰ
108	VSDTC114YUA-1	AB	DJ		B	Transistor(DTC114YUA) [Q10,Q11,Q12,Q13,Q14,Q15] ﾄﾗﾝｼﾞｽﾀｰ
	VSDTC114YUA-1	AB	DJ		B	Transistor(DTC114YUA) [Q19,Q20,Q23,Q25,Q27,Q30] ﾄﾗﾝｼﾞｽﾀｰ
	VSDTC114YUA-1	AB	DJ		B	Transistor(DTC114YUA) [Q31,Q33,Q34,Q35,Q17] ﾄﾗﾝｼﾞｽﾀｰ
	(Unit)					
901	CPWBN1519DS52	CX	**	N	E	MFPC2 PWB UNIT MPFC2 基板ﾕﾆｯﾄ

53 ICU 基板 (ICU PWB)

NO.	PARTS CODE	PRICE RANK		NEW MARK	PART RANK	DESCRIPTION
		Ex.	Ja.			
1	PCAPH0010GCZZ	AD	DJ		C	Cap(JM-2W-96) [PIN1,PIN2] ｷｬｯﾌﾟ
2	PCOVP1468FCZZ	AD	DJ		D	FAX battery cover FAX ﾃﾞﾝﾁｶﾊﾞｰ
3	QCNCM0923FC14	AE	DJ		C	Connector(14pin) [CN10] ｺﾈｸﾀｰ
4	QCNCM0923FC22	AF	DS		C	Connector(22pin) [CN4,CN5,CN6,CN9] ｺﾈｸﾀｰ
5	QCNCM0923FC24	AF	DS		C	Connector(24pin) [CN13] ｺﾈｸﾀｰ
6	QCNCM1069AC1J	AD	DJ		C	Connector(10pin) [CN11] ｺﾈｸﾀｰ
7	QCNCM1187FCZZ	AM	EG	N	C	Connector(F_BM30B-SRDS-G-TF) (AR-C260F/C260FP) [CN12] ｺﾈｸﾀｰ
8	QCNCM7014SC0C	AA	DD		C	Connector(3pin) [CN20] ｺﾈｸﾀｰ
9	QCNCM7014SC0G	AB	DD		C	Connector(7pin) (Japan Only) [CN14] ｺﾈｸﾀｰ
10	QCNCW0948FCZ6	AC	DJ		C	Connector(B06B-XASK-1) [CN1,CN2,CN3,CN7] ｺﾈｸﾀｰ
11	QCNCW1047FCZZ	AH	DX		C	Connector(TSC7658-01-201) [CN18] ｺﾈｸﾀｰ
12	QCNCW1170FCZZ	AG	DS		C	Connector(28FMZ-BT) [CN16] ｺﾈｸﾀｰ
13	QCNCW1186FCZZ	AF	DS		C	Connector(TX25-100P-LT-H1) [CN17] ｺﾈｸﾀｰ
14	QPiN-0003GCZZ	AC	DJ		C	Pin(T3B-SQ) [PIN1,PIN2] ﾋﾟﾝ
15	QSOCZ0001QSZZ	AL	EB		C	Socket(DMM168-FLAA2-3A133) [DIMM2,DIMM1] ｿｹｯﾄ
16	QSOCZ0073FCZZ	AL	EB		C	Connector(72pin) [SOCKET2,SOCKET3] ｺﾈｸﾀｰ
	QSOCZ0073FCZZ	AL	EB		C	Connector(72pin) (AR-C260F/C260FP)[SOCKET1] ｺﾈｸﾀｰ
17	QSOCZ6428ACZZ	AE	DS		C	IC socket(28pin) [IC50] IC ｿｹｯﾄ
18	RCRSP0069FCZZ	AG	DS		B	Crystal(14.7456MHz)(AT-51) [X3] ｸﾘｽﾀﾙ
19	RCRSP0077FCZZ	AF	DS		B	Crystal(16.667MHz)(AT-51) [X5] ｸﾘｽﾀﾙ
20	RCRSP0079FCZZ	AF	DS		B	Crystal(12.352MHz)(AT-51) [X6] ｸﾘｽﾀﾙ
21	RCRSP6676RCZZ	AG	DX		B	Crystal(32.768KHz) [X9] ｸﾘｽﾀﾙ
22	RCRSQ0073FCZZ	AF	DS		B	Crystal(21.47727MHz)(AT-51) [X1] ｸﾘｽﾀﾙ
23	RFiLN5022NCZZ	AC	DJ		C	EMI filter(BLM11A12PT) [L1,L2,L5,L7,L9,L11,L13] EMI ﾌｨﾙﾀｰ
	RFiLN5022NCZZ	AC	DJ		C	EMI filter(BLM11A12PT) [L15,L16,L20,L22,L24,L26] EMI ﾌｨﾙﾀｰ
	RFiLN5022NCZZ	AC	DJ		C	EMI filter(BLM11A12PT) [L27,L29,L32,L35,L36,L37] EMI ﾌｨﾙﾀｰ
24	RFiLZ1043LCZZ	AC	DJ		C	Filter(33000pF) [NF2,NF3,NF4,NF5,NF6,NF8] ﾌｨﾙﾀｰ
	RFiLZ1043LCZZ	AC	DJ		C	Filter(33000pF) [NF9] ﾌｨﾙﾀｰ
25	RH-iX3103YAZZ	AG	DS		B	REGURATOR(L1087MPX_ADJ) [IC51,IC31] IC
26	RMEMM0001FCZZ	BZ	TF		B	SDRAM-Module-PWB(256MB-DIMM) [DIMM2] SDRAM-Module-PWB
27	RMPTW4100QCJJ	AA	DD		B	Block resistor(10Ω×4) [BR42,BR58,BR61,BR66] ﾌﾞﾛｯｸﾃｲｺｳ
28	RMPTW4101QCJJ	AB	DD		B	Block resistor(100Ω×4) [BR1,BR2,BR3,BR4,BR5,BR6] ﾌﾞﾛｯｸﾃｲｺｳ
	RMPTW4101QCJJ	AB	DD		B	Block resistor(100Ω×4) [BR26,BR40] ﾌﾞﾛｯｸﾃｲｺｳ
29	RMPTW4103QCJJ	AB	DD		B	Block resistor(10KΩ×4) [BR7,BR8,BR9,BR10,BR11] ﾌﾞﾛｯｸﾃｲｺｳ
	RMPTW4103QCJJ	AB	DD		B	Block resistor(10KΩ×4) [BR12,BR13,BR14,BR15,BR18] ﾌﾞﾛｯｸﾃｲｺｳ
	RMPTW4103QCJJ	AB	DD		B	Block resistor(10KΩ×4) [BR25,BR27,BR28,BR39,BR41] ﾌﾞﾛｯｸﾃｲｺｳ
	RMPTW4103QCJJ	AB	DD		B	Block resistor(10KΩ×4) [BR57,BR62,BR63,BR64,BR65] ﾌﾞﾛｯｸﾃｲｺｳ
	RMPTW4103QCJJ	AB	DD		B	Block resistor(10KΩ×4) [BR84,BR85,BR104,BR108] ﾌﾞﾛｯｸﾃｲｺｳ
	RMPTW4103QCJJ	AB	DD		B	Block resistor(10KΩ×4) [BR109,BR110,BR111,BR114] ﾌﾞﾛｯｸﾃｲｺｳ
	RMPTW4103QCJJ	AB	DD		B	Block resistor(10KΩ×4) [BR115,BR116,BR117,BR122] ﾌﾞﾛｯｸﾃｲｺｳ
	RMPTW4103QCJJ	AB	DD		B	Block resistor(10KΩ×4) [BR124,BR132,BR137,BR142] ﾌﾞﾛｯｸﾃｲｺｳ
	RMPTW4103QCJJ	AB	DD		B	Block resistor(10KΩ×4) [BR146,BR150,BR152,BR154] ﾌﾞﾛｯｸﾃｲｺｳ
	RMPTW4103QCJJ	AB	DD		B	Block resistor(10KΩ×4) [BR156,BR158,BR160,BR162] ﾌﾞﾛｯｸﾃｲｺｳ
	RMPTW4103QCJJ	AB	DD		B	Block resistor(10KΩ×4) [BR164,BR167,BR169,BR177] ﾌﾞﾛｯｸﾃｲｺｳ
	RMPTW4103QCJJ	AB	DD		B	Block resistor(10KΩ×4) [BR179,BR205,BR206] ﾌﾞﾛｯｸﾃｲｺｳ
30	RMPTW4470QCJJ	AB	DD		B	Block resistor(47Ω×4 1/32W ±5%) [BR19,BR20,BR21] ﾌﾞﾛｯｸﾃｲｺｳ
	RMPTW4470QCJJ	AB	DD		B	Block resistor(47Ω×4 1/32W ±5%) [BR22,BR23] ﾌﾞﾛｯｸﾃｲｺｳ
	RMPTW4470QCJJ	AB	DD		B	Block resistor(47Ω×4 1/32W ±5%) [BR24,BR37,BR38] ﾌﾞﾛｯｸﾃｲｺｳ
	RMPTW4470QCJJ	AB	DD		B	Block resistor(47Ω×4 1/32W ±5%) [BR43,BR44] ﾌﾞﾛｯｸﾃｲｺｳ
	RMPTW4470QCJJ	AB	DD		B	Block resistor(47Ω×4 1/32W ±5%) [BR45,BR46,BR47] ﾌﾞﾛｯｸﾃｲｺｳ
	RMPTW4470QCJJ	AB	DD		B	Block resistor(47Ω×4 1/32W ±5%) [BR48,BR49] ﾌﾞﾛｯｸﾃｲｺｳ
	RMPTW4470QCJJ	AB	DD		B	Block resistor(47Ω×4 1/32W ±5%) [BR50,BR51,BR52] ﾌﾞﾛｯｸﾃｲｺｳ
	RMPTW4470QCJJ	AB	DD		B	Block resistor(47Ω×4 1/32W ±5%) [BR55,BR56] ﾌﾞﾛｯｸﾃｲｺｳ
	RMPTW4470QCJJ	AB	DD		B	Block resistor(47Ω×4 1/32W ±5%) [BR59,BR60,BR67] ﾌﾞﾛｯｸﾃｲｺｳ
	RMPTW4470QCJJ	AB	DD		B	Block resistor(47Ω×4 1/32W ±5%) [BR69,BR71] ﾌﾞﾛｯｸﾃｲｺｳ
	RMPTW4470QCJJ	AB	DD		B	Block resistor(47Ω×4 1/32W ±5%) [BR73,BR75,BR77] ﾌﾞﾛｯｸﾃｲｺｳ
	RMPTW4470QCJJ	AB	DD		B	Block resistor(47Ω×4 1/32W ±5%) [BR78,BR81] ﾌﾞﾛｯｸﾃｲｺｳ
	RMPTW4470QCJJ	AB	DD		B	Block resistor(47Ω×4 1/32W ±5%) [BR82,BR86,BR87] ﾌﾞﾛｯｸﾃｲｺｳ
	RMPTW4470QCJJ	AB	DD		B	Block resistor(47Ω×4 1/32W ±5%) [BR88,BR89] ﾌﾞﾛｯｸﾃｲｺｳ
	RMPTW4470QCJJ	AB	DD		B	Block resistor(47Ω×4 1/32W ±5%) [BR91,BR97] ﾌﾞﾛｯｸﾃｲｺｳ
	RMPTW4470QCJJ	AB	DD		B	Block resistor(47Ω×4 1/32W ±5%) [BR98,BR99] ﾌﾞﾛｯｸﾃｲｺｳ
	RMPTW4470QCJJ	AB	DD		B	Block resistor(47Ω×4 1/32W ±5%) [BR100,BR105] ﾌﾞﾛｯｸﾃｲｺｳ
	RMPTW4470QCJJ	AB	DD		B	Block resistor(47Ω×4 1/32W ±5%) [BR106,BR107] ﾌﾞﾛｯｸﾃｲｺｳ
	RMPTW4470QCJJ	AB	DD		B	Block resistor(47Ω×4 1/32W ±5%) [BR118,BR125] ﾌﾞﾛｯｸﾃｲｺｳ
	RMPTW4470QCJJ	AB	DD		B	Block resistor(47Ω×4 1/32W ±5%) [BR126,BR127] ﾌﾞﾛｯｸﾃｲｺｳ
	RMPTW4470QCJJ	AB	DD		B	Block resistor(47Ω×4 1/32W ±5%) [BR128,BR129] ﾌﾞﾛｯｸﾃｲｺｳ
	RMPTW4470QCJJ	AB	DD		B	Block resistor(47Ω×4 1/32W ±5%) [BR130,BR131] ﾌﾞﾛｯｸﾃｲｺｳ
	RMPTW4470QCJJ	AB	DD		B	Block resistor(47Ω×4 1/32W ±5%) [BR133,BR136] ﾌﾞﾛｯｸﾃｲｺｳ
	RMPTW4470QCJJ	AB	DD		B	Block resistor(47Ω×4 1/32W ±5%) [BR138,BR141] ﾌﾞﾛｯｸﾃｲｺｳ
	RMPTW4470QCJJ	AB	DD		B	Block resistor(47Ω×4 1/32W ±5%) [BR143,BR145] ﾌﾞﾛｯｸﾃｲｺｳ
	RMPTW4470QCJJ	AB	DD		B	Block resistor(47Ω×4 1/32W ±5%) [BR147,BR149] ﾌﾞﾛｯｸﾃｲｺｳ
	RMPTW4470QCJJ	AB	DD		B	Block resistor(47Ω×4 1/32W ±5%) [BR151,BR153] ﾌﾞﾛｯｸﾃｲｺｳ
	RMPTW4470QCJJ	AB	DD		B	Block resistor(47Ω×4 1/32W ±5%) [BR155,BR157] ﾌﾞﾛｯｸﾃｲｺｳ
	RMPTW4470QCJJ	AB	DD		B	Block resistor(47Ω×4 1/32W ±5%) [BR159,BR161] ﾌﾞﾛｯｸﾃｲｺｳ
	RMPTW4470QCJJ	AB	DD		B	Block resistor(47Ω×4 1/32W ±5%) [BR163,BR165] ﾌﾞﾛｯｸﾃｲｺｳ
	RMPTW4470QCJJ	AB	DD		B	Block resistor(47Ω×4 1/32W ±5%) [BR170,BR171] ﾌﾞﾛｯｸﾃｲｺｳ
	RMPTW4470QCJJ	AB	DD		B	Block resistor(47Ω×4 1/32W ±5%) [BR172,BR173] ﾌﾞﾛｯｸﾃｲｺｳ
	RMPTW4470QCJJ	AB	DD		B	Block resistor(47Ω×4 1/32W ±5%) [BR174,BR175] ﾌﾞﾛｯｸﾃｲｺｳ
	RMPTW4470QCJJ	AB	DD		B	Block resistor(47Ω×4 1/32W ±5%) [BR176] ﾌﾞﾛｯｸﾃｲｺｳ

53 ICU 基板 (ICU PWB)

NO.	PARTS CODE	PRICE RANK Ex.	PRICE RANK Ja.	NEW MARK	PART RANK	DESCRIPTION
30	RMPTW4470QCJJ	AB	DD		B	Block resistor(47Ω×4 1/32W ±5%) [BR180,BR181] ﾌﾞﾛｯｸﾃｲｺｳ
	RMPTW4470QCJJ	AB	DD		B	Block resistor(47Ω×4 1/32W ±5%) [BR182,BR183] ﾌﾞﾛｯｸﾃｲｺｳ
	RMPTW4470QCJJ	AB	DD		B	Block resistor(47Ω×4 1/32W ±5%) [BR184,BR200] ﾌﾞﾛｯｸﾃｲｺｳ
	RMPTW4470QCJJ	AB	DD		B	Block resistor(47Ω×4 1/32W ±5%) [BR201,BR202,BR203] ﾌﾞﾛｯｸﾃｲｺｳ
⚠ 31	UBATi0014FCZZ	AN	EQ		B	Battery(CR2477-H01) (AR-C260F/C260FP)[BT1] ﾊﾞｯﾃﾘｰ
32	VCCCCZ1HH151J	AC	DD		C	Capacitor(150pF/50V)(GRM36CH151J50PT) [C64,C65,C66] ｺﾝﾃﾞﾝｻｰ
	VCCCCZ1HH151J	AC	DD		C	Capacitor(150pF/50V)(GRM36CH151J50PT) [C67,C103] ｺﾝﾃﾞﾝｻｰ
	VCCCCZ1HH151J	AC	DD		C	Capacitor(150pF/50V)(GRM36CH151J50PT) [C104,C118,C119] ｺﾝﾃﾞﾝｻｰ
33	VCCCCZ1HH220J	AA	DD		C	Capacitor(50WV 22pF) [C33,C34] ｺﾝﾃﾞﾝｻｰ
34	VCCCCZ1HH270J	AA	DD		C	Capacitor(27P 50V 1005) [C148,C150,C151] ｺﾝﾃﾞﾝｻｰ
	VCCCCZ1HH270J	AA	DD		C	Capacitor(27P 50V 1005) [C153] ｺﾝﾃﾞﾝｻｰ
	VCCCCZ1HH270J	AA	DD		C	Capacitor(27P 50V 1005) [C60,C62] ｺﾝﾃﾞﾝｻｰ
35	VCEAGA1AW107M	AB	DD		C	Capacitor(10WV 100μF) [C46,C81,C112,C117,C154] ｺﾝﾃﾞﾝｻｰ
	VCEAGA1AW107M	AB	DD		C	Capacitor(10WV 100μF) [C155,C182,C233,C241,C254] ｺﾝﾃﾞﾝｻｰ
	VCEAGA1AW107M	AB	DD		C	Capacitor(10WV 100μF) [C272,C273,C295,C316] ｺﾝﾃﾞﾝｻｰ
36	VCEAGA1AW476M	AA	DD		C	Capacitor(10WV 47μF) [C1,C6,C13,C30,C83,C94] ｺﾝﾃﾞﾝｻｰ
	VCEAGA1AW476M	AA	DD		C	Capacitor(10WV 47μF) [C218,C219] ｺﾝﾃﾞﾝｻｰ
	VCEAGA1AW476M	AA	DD		C	Capacitor(10WV 47μF) (AR-C260F/C260FP)[C361,C367] ｺﾝﾃﾞﾝｻｰ
	VCEAGA1AW476M	AA	DD		C	Capacitor(10WV 47μF) [C1025,C1035] ｺﾝﾃﾞﾝｻｰ
37	VCEAZA1AW477M	AC	DD		C	Capacitor(10WV 470μF) [C5,C8,C12,C56,C157,C177] ｺﾝﾃﾞﾝｻｰ
38	VCKYCY1EB104K	AG	DX		C	Capacitor(25WV 0.1μF(1608:B)) (Japan only) [C287,C288] ｺﾝﾃﾞﾝｻｰ
	VCKYCY1EB104K	AG	DX		C	Capacitor(25WV 0.1μF(1608:B)) (Japan only) [C292,C307,C308] ｺﾝﾃﾞﾝｻｰ
	VCKYCY1EB104K	AG	DX		C	Capacitor(25WV 0.1μF(1608:B)) [C53] ｺﾝﾃﾞﾝｻｰ
	VCKYCY1EB104K	AG	DX		C	Capacitor(25WV 0.1μF(1608:B)) (AR-C260F/C260FP) [C196,C197,C205] ｺﾝﾃﾞﾝｻｰ
	VCKYCY1EB104K	AG	DX		C	Capacitor(25WV 0.1μF(1608:B)) (AR-C260F/C260FP) [C217,C220] ｺﾝﾃﾞﾝｻｰ
	VCKYCY1EB104K	AG	DX		C	Capacitor(25WV 0.1μF(1608:B)) (AR-C260F/C260FP) [C225,C226,C229] ｺﾝﾃﾞﾝｻｰ
	VCKYCY1EB104K	AG	DX		C	Capacitor(25WV 0.1μF(1608:B)) (AR-C260F/C260FP) [C232,C244] ｺﾝﾃﾞﾝｻｰ
39	VCKYCZ1CF104Z	AB	DD		C	Capacitor(16WV 0.1μF) [C10,C11,C29,C37,C38,C40] ｺﾝﾃﾞﾝｻｰ
	VCKYCZ1CF104Z	AB	DD		C	Capacitor(16WV 0.1μF) [C41,C50,C57,C59,C61,C63] ｺﾝﾃﾞﾝｻｰ
	VCKYCZ1CF104Z	AB	DD		C	Capacitor(16WV 0.1μF) [C68,C70,C71,C72,C73,C74] ｺﾝﾃﾞﾝｻｰ
	VCKYCZ1CF104Z	AB	DD		C	Capacitor(16WV 0.1μF) [C75,C76,C77,C78,C80,C82] ｺﾝﾃﾞﾝｻｰ
	VCKYCZ1CF104Z	AB	DD		C	Capacitor(16WV 0.1μF) [C84,C89,C90,C91,C93,C96] ｺﾝﾃﾞﾝｻｰ
	VCKYCZ1CF104Z	AB	DD		C	Capacitor(16WV 0.1μF) [C99,C100,C101,C102,C105] ｺﾝﾃﾞﾝｻｰ
	VCKYCZ1CF104Z	AB	DD		C	Capacitor(16WV 0.1μF) [C106,C107,C108,C109,C113] ｺﾝﾃﾞﾝｻｰ
	VCKYCZ1CF104Z	AB	DD		C	Capacitor(16WV 0.1μF) [C114,C116,C120,C121,C122] ｺﾝﾃﾞﾝｻｰ
	VCKYCZ1CF104Z	AB	DD		C	Capacitor(16WV 0.1μF) [C124,C125,C128,C129,C130] ｺﾝﾃﾞﾝｻｰ
	VCKYCZ1CF104Z	AB	DD		C	Capacitor(16WV 0.1μF) [C131,C132,C133,C134,C136] ｺﾝﾃﾞﾝｻｰ
	VCKYCZ1CF104Z	AB	DD		C	Capacitor(16WV 0.1μF) [C137,C140,C141,C142,C143] ｺﾝﾃﾞﾝｻｰ
	VCKYCZ1CF104Z	AB	DD		C	Capacitor(16WV 0.1μF) [C144,C147,C149,C152,C156] ｺﾝﾃﾞﾝｻｰ
	VCKYCZ1CF104Z	AB	DD		C	Capacitor(16WV 0.1μF) [C158,C159,C160,C161,C162] ｺﾝﾃﾞﾝｻｰ
	VCKYCZ1CF104Z	AB	DD		C	Capacitor(16WV 0.1μF) [C163,C164,C167,C168,C169] ｺﾝﾃﾞﾝｻｰ
	VCKYCZ1CF104Z	AB	DD		C	Capacitor(16WV 0.1μF) [C171,C172,C173,C175,C176] ｺﾝﾃﾞﾝｻｰ
	VCKYCZ1CF104Z	AB	DD		C	Capacitor(16WV 0.1μF) [C178,C180,C181,C183,C184] ｺﾝﾃﾞﾝｻｰ
	VCKYCZ1CF104Z	AB	DD		C	Capacitor(16WV 0.1μF) [C188,C189,C190,C192,C193] ｺﾝﾃﾞﾝｻｰ
	VCKYCZ1CF104Z	AB	DD		C	Capacitor(16WV 0.1μF) [C194,C195,C198,C199,C200] ｺﾝﾃﾞﾝｻｰ
	VCKYCZ1CF104Z	AB	DD		C	Capacitor(16WV 0.1μF) [C201,C202,C206,C207,C208] ｺﾝﾃﾞﾝｻｰ
	VCKYCZ1CF104Z	AB	DD		C	Capacitor(16WV 0.1μF) [C209,C210,C211,C212,C213] ｺﾝﾃﾞﾝｻｰ
	VCKYCZ1CF104Z	AB	DD		C	Capacitor(16WV 0.1μF) [C214,C215,C222,C223,C234] ｺﾝﾃﾞﾝｻｰ
	VCKYCZ1CF104Z	AB	DD		C	Capacitor(16WV 0.1μF) [C235,C236,C237,C238,C239] ｺﾝﾃﾞﾝｻｰ
	VCKYCZ1CF104Z	AB	DD		C	Capacitor(16WV 0.1μF) [C240,C248,C251,C252,C253] ｺﾝﾃﾞﾝｻｰ
	VCKYCZ1CF104Z	AB	DD		C	Capacitor(16WV 0.1μF) [C257,C258,C259,C260,C261] ｺﾝﾃﾞﾝｻｰ
	VCKYCZ1CF104Z	AB	DD		C	Capacitor(16WV 0.1μF) [C262,C264,C265,C266,C267] ｺﾝﾃﾞﾝｻｰ
	VCKYCZ1CF104Z	AB	DD		C	Capacitor(16WV 0.1μF) [C268,C269,C270,C274,C275] ｺﾝﾃﾞﾝｻｰ
	VCKYCZ1CF104Z	AB	DD		C	Capacitor(16WV 0.1μF) [C276,C277,C278,C281,C282] ｺﾝﾃﾞﾝｻｰ
	VCKYCZ1CF104Z	AB	DD		C	Capacitor(16WV 0.1μF) [C284,C285,C286,C289,C290] ｺﾝﾃﾞﾝｻｰ
	VCKYCZ1CF104Z	AB	DD		C	Capacitor(16WV 0.1μF) [C291,C294,C296,C297,C298] ｺﾝﾃﾞﾝｻｰ
	VCKYCZ1CF104Z	AB	DD		C	Capacitor(16WV 0.1μF) [C299,C300,C301,C302,C303] ｺﾝﾃﾞﾝｻｰ
	VCKYCZ1CF104Z	AB	DD		C	Capacitor(16WV 0.1μF) [C304,C309,C310,C317,C318] ｺﾝﾃﾞﾝｻｰ
	VCKYCZ1CF104Z	AB	DD		C	Capacitor(16WV 0.1μF) [C319,C320,C323,C324,C325] ｺﾝﾃﾞﾝｻｰ
	VCKYCZ1CF104Z	AB	DD		C	Capacitor(16WV 0.1μF) [C329,C333,C334,C335,C336] ｺﾝﾃﾞﾝｻｰ
	VCKYCZ1CF104Z	AB	DD		C	Capacitor(16WV 0.1μF) [C344,C347,C348,C351] ｺﾝﾃﾞﾝｻｰ
	VCKYCZ1CF104Z	AB	DD		C	Capacitor(16WV 0.1μF) [C355,C356,C357,C364,C368] ｺﾝﾃﾞﾝｻｰ
	VCKYCZ1CF104Z	AB	DD		C	Capacitor(16WV 0.1μF) [C1022,C1026,C1027,C1028] ｺﾝﾃﾞﾝｻｰ
	VCKYCZ1CF104Z	AB	DD		C	Capacitor(16WV 0.1μF) [C1029,C1030,C1031,C1032] ｺﾝﾃﾞﾝｻｰ
	VCKYCZ1CF104Z	AB	DD		C	Capacitor(16WV 0.1μF) [C1033,C1034,C1047,C1050] ｺﾝﾃﾞﾝｻｰ
	VCKYCZ1CF104Z	AB	DD		C	Capacitor(16WV 0.1μF) [C1051,C1052,C1053] ｺﾝﾃﾞﾝｻｰ
	VCKYCZ1CF104Z	AB	DD		C	Capacitor(16WV 0.1μF) (AR-C260F/C260FP) [C92,C135,C165] ｺﾝﾃﾞﾝｻｰ
	VCKYCZ1CF104Z	AB	DD		C	Capacitor(16WV 0.1μF) (AR-C260F/C260FP)[C216,C224] ｺﾝﾃﾞﾝｻｰ
	VCKYCZ1CF104Z	AB	DD		C	Capacitor(16WV 0.1μF) (AR-C260F/C260FP) [C250,C279,C280] ｺﾝﾃﾞﾝｻｰ
40	VCKYCZ1EB103K	AB	DD		C	Capacitor(0.01μF 25V 1005) [C15,C19,C23,C98] ｺﾝﾃﾞﾝｻｰ
41	VCKYCZ1HB102K	AA	DD		C	Capacitor(50WV 1000pF) [C17,C21,C25,C36,C79,C110] ｺﾝﾃﾞﾝｻｰ

53 ICU 基板 (ICU PWB)

NO.	PARTS CODE	PRICE RANK Ex.	PRICE RANK Ja.	NEW MARK	PART RANK	DESCRIPTION
41	VCKYCZ1HB102K	AA	DD		C	Capacitor(50WV 1000pF) [C174,C293,C312,C313,C322] ｺﾝﾃﾞﾝｻｰ
	VCKYCZ1HB102K	AA	DD		C	Capacitor(50WV 1000pF) [C327,C332,C337,C338,C339] ｺﾝﾃﾞﾝｻｰ
	VCKYCZ1HB102K	AA	DD		C	Capacitor(50WV 1000pF) [C352,C353,C354,C358,C359] ｺﾝﾃﾞﾝｻｰ
	VCKYCZ1HB102K	AA	DD		C	Capacitor(50WV 1000pF) [C360,C365,C1024,C1036] ｺﾝﾃﾞﾝｻｰ
	VCKYCZ1HB102K	AA	DD		C	Capacitor(50WV 1000pF) [C1037,C1056] ｺﾝﾃﾞﾝｻｰ
	VCKYCZ1HB102K	AA	DD		C	Capacitor(50WV 1000pF) (AR-C260F/C260FP) [C203,C230] ｺﾝﾃﾞﾝｻｰ
	VCKYCZ1HB102K	AA	DD		C	Capacitor(50WV 1000pF) (AR-C260F/C260FP)[C231] ｺﾝﾃﾞﾝｻｰ
42	VCKYCZ1HB471K	AA	DD		C	Capacitor(50WV 470pF) [C14,C18,C22,C95,C314] ｺﾝﾃﾞﾝｻｰ
	VCKYCZ1HB471K	AA	DD		C	Capacitor(50WV 470pF) [C315] ｺﾝﾃﾞﾝｻｰ
43	VHD1SS355//-1	AB	DJ		B	Diode(1SS355) [D100,D101] ﾀﾞｲｵｰﾄﾞ
	VHD1SS355//-1	AB	DJ		B	Diode(1SS355) (AR-C260F/C260FP)[D37,D40] ﾀﾞｲｵｰﾄﾞ
44	VHDDAN202U/-1	AB	DD		B	Diode(DAN202U) [D9,D12,D16,D17,D18,D28] ﾀﾞｲｵｰﾄﾞ
	VHDDAN202U/-1	AB	DD		B	Diode(DAN202U) [D29,D30,D31,D32,D33,D34] ﾀﾞｲｵｰﾄﾞ
	VHDDAN202U/-1	AB	DD		B	Diode(DAN202U) [D35,D36,D41,D42,D43,D45] ﾀﾞｲｵｰﾄﾞ
	VHDDAN202U/-1	AB	DD		B	Diode(DAN202U) (AR-C260F/C260FP)[D4] ﾀﾞｲｵｰﾄﾞ
45	VHDDAP202U/-1	AB	DD		B	Diode(DAP202U) [D8,D11,D13,D14,D15,D19] ﾀﾞｲｵｰﾄﾞ
	VHDDAP202U/-1	AB	DD		B	Diode(DAP202U) [D20,D21,D22,D23,D24,D25] ﾀﾞｲｵｰﾄﾞ
	VHDDAP202U/-1	AB	DD		B	Diode(DAP202U) [D26,D27,D38,D39,D44,D46] ﾀﾞｲｵｰﾄﾞ
	VHDDAP202U/-1	AB	DD		B	Diode(DAP202U) (AR-C260F/C260FP)[D2,D5] ﾀﾞｲｵｰﾄﾞ
46	VHDRB451F//-1	AD	DS		B	Diode(RB451F) (AR-C260F/C260FP)[D3] ﾀﾞｲｵｰﾄﾞ
47	VHi23S09SC+-1	AV	FG		B	ZDBUFFER(CY23S09SC-1) [IC34] IC
48	VHi58C256AP-1	BB	GD		B	EEPROM(HN58V256AP-10) [IC50] EEPROM
50	VHi65949P03-1	BE	GN		B	ASIC(uPD65949GD-P03-LML)(IOASIC) [IC56] IC
51	VHi74LCX14MTC	AE	DJ		B	IC(74LCX14MTC) [IC21,IC23,IC29,IC66,IC67] IC
	VHi74LCX14MTC	AE	DJ		B	IC(74LCX14MTC) [IC68] IC
	VHi74LCX14MTC	AE	DJ		B	IC(74LCX14MTC) (AR-C260F/C260FP)[IC43] IC
52	VHi74LCX244MT	AM	DX		B	IC(74LCX244MT) [IC2,IC3,IC4,IC7,IC8,IC13] IC
	VHi74LCX244MT	AM	DX		B	IC(74LCX244MT) [IC17,IC18,IC26,IC27,IC35] IC
	VHi74LCX244MT	AM	DX		B	IC(74LCX244MT) [IC53,IC69,IC72,IC73] IC
	VHi74LCX244MT	AM	DX		B	IC(74LCX244MT) [IC74,IC75,IC76,IC102] IC
	VHi74LCX244MT	AM	DX		B	IC(74LCX244MT) [IC103,IC104,IC105,IC106] IC
	VHi74LCX244MT	AM	DX		B	IC(74LCX244MT) [IC107,IC108] IC
53	VHi74LCX245MT	AM	DX		B	IC(74LCX245MT) [IC57,IC58,IC59,IC60,IC61] IC
54	VHi85672011-1	BV	RB		B	ASIC(uPD85672S1-011-F6)(ICUASIC) [IC33] IC
55	VHi90CF364A-1	AU	FG		B	LVDSIC(DS90CF364AMTD) [IC32] IC
56	VHiCY25811S-1	AN	EG		B	SSIC(CY25811SC) [IC12] IC
58	VHiCY25814S-1	AN	EG		B	SSIC(CY25814SC) [IC39,IC37] IC
59	VHiHi207ECB-1	AN	EQ		B	RS232CDRIVER(HIN207ECB) (Japan only) [IC52] IC
60	VHiLCX574MT-1	AF	DS		B	LOGIC(74LCX574) [IC28] IC
61	VHiLCX74MTC-1	AE	DJ		B	LOGIC(74LCX74) [IC1] IC
62	VHiLHF80J01-1	AX	FG		B	FLASH ROM(F_LH28F800BJE-PTTL90) (AR-C260F/C260FP) [IC30,IC42] FLASH ROM
63	VHiLM393D++-1	AE	DJ		B	COMPARATOR(LM393D [IC78] IC
64	VHiM3032ATC-1	AT	EZ	N	B	CPLD(EPM3032ATC44-10) [IC109] IC
65	VHiM51957BFP1	AH	DX		B	IC(M51957BFP1) [IC22] IC
66	VHiMAX3225E-1	AT	EZ		B	IC(MAX3225E) (AR-C260F/C260FP)[IC45,IC44] IC
67	VHiNJU6356E-1	AK	DX		B	IC(NJU6356E) [IC63] IC
68	VHiPM2500++-1	BP	LP		B	ASIC(PM-2500) [IC48] IC
69	VHiSD8M16L1-1	BB	GD		B	SDRAM(128x16SDRAM) [IC55] SDRAM
70	VHiSH770910-1	BH	GX		B	IC(SH770910) [IC54] IC
71	VHiSR1024-7LL	AU	EZ		B	SRAM(F_UT62L1024LC-70LL) (AR-C260F/C260FP) [IC65,IC64] SRAM
72	VHPLT1F67AF-1	AC	DJ		B	LED(LT1F67AF) [SLED1,SLED2] LED
	VHPLT1F67AF-1	AC	DJ		B	LED(LT1F67AF) [SLED3] LED
73	VRS-CZ1JD000J	AA	DD		C	Resistor(1/16W 0Ω ±5%) [R3,R6,R9,R13,R37,R40,R64] 抵抗
	VRS-CZ1JD000J	AA	DD		C	Resistor(1/16W 0Ω ±5%) [R85,R104,R105,R118,R155] 抵抗
	VRS-CZ1JD000J	AA	DD		C	Resistor(1/16W 0Ω ±5%) [R156,R162,R163,R175,R178] 抵抗
	VRS-CZ1JD000J	AA	DD		C	Resistor(1/16W 0Ω ±5%) [R188,R192,R246,R272,R306] 抵抗
	VRS-CZ1JD000J	AA	DD		C	Resistor(1/16W 0Ω ±5%) [R307,R308,R309,R311,R312] 抵抗
	VRS-CZ1JD000J	AA	DD		C	Resistor(1/16W 0Ω ±5%) [R317,R318,R321,R330,R331] 抵抗
	VRS-CZ1JD000J	AA	DD		C	Resistor(1/16W 0Ω ±5%) [R343,R344,R353,R356,R357] 抵抗
	VRS-CZ1JD000J	AA	DD		C	Resistor(1/16W 0Ω ±5%) [R367,R371,R384,R420,R424] 抵抗
	VRS-CZ1JD000J	AA	DD		C	Resistor(1/16W 0Ω ±5%) [R457,R458,R460,R461,R478] 抵抗
	VRS-CZ1JD000J	AA	DD		C	Resistor(1/16W 0Ω ±5%) [R557,R558,R571,R602,R678] 抵抗
	VRS-CZ1JD000J	AA	DD		C	Resistor(1/16W 0Ω ±5%) [R687,R704,R902,R903] 抵抗
	VRS-CZ1JD000J	AA	DD		C	Resistor(1/16W 0Ω ±5%) [R905,R907,R1016] 抵抗
	VRS-CZ1JD000J	AA	DD		C	Resistor(1/16W 0Ω ±5%) [R1022,R1040,R1051,R1062] 抵抗
	VRS-CZ1JD000J	AA	DD		C	Resistor(1/16W 0Ω ±5%) [R1085,R1092,R1096,R1098] 抵抗
	VRS-CZ1JD000J	AA	DD		C	Resistor(1/16W 0Ω ±5%) [R1100,R1102,R1104,R1111] 抵抗
	VRS-CZ1JD000J	AA	DD		C	Resistor(1/16W 0Ω ±5%) (AR-C260F/C260FP) [R191,R423,R431] 抵抗
	VRS-CZ1JD000J	AA	DD		C	Resistor(1/16W 0Ω ±5%) (AR-C260F/C260FP) [R432,R436] 抵抗
	VRS-CZ1JD000J	AA	DD		C	Resistor(1/16W 0Ω ±5%) (AR-C260F/C260FP) [R437,R449,R450] 抵抗
	VRS-CZ1JD000J	AA	DD		C	Resistor(1/16W 0Ω ±5%) (AR-C260F/C260FP) [R462,R463] 抵抗

53 ICU 基板 (ICU PWB)

NO.	PARTS CODE	PRICE RANK Ex.	PRICE RANK Ja.	NEW MARK	PART RANK	DESCRIPTION
73	VRS-CZ1JD000J	AA	DD		C	Resistor(1/16W 0Ω ±5%) (AR-C260F/C260FP) [R488,R489,R523] 抵抗
	VRS-CZ1JD000J	AA	DD		C	Resistor(1/16W 0Ω ±5%) (AR-C260F/C260FP) [R790,R1010] 抵抗
	VRS-CZ1JD000J	AA	DD		C	Resistor(1/16W 0Ω ±5%) [R2,R5,R8,R221] 抵抗
	VRS-CZ1JD000J	AA	DD		C	Resistor(1/16W 0Ω ±5%) (Except Japan) [R1083] 抵抗
74	VRS-CZ1JD100J	AA	DD		C	Resistor(1/16W 10Ω ±5%) [R136,R137,R149,R150,R227] 抵抗
	VRS-CZ1JD100J	AA	DD		C	Resistor(1/16W 10Ω ±5%) [R228,R253,R257,R258,R287] 抵抗
	VRS-CZ1JD100J	AA	DD		C	Resistor(1/16W 10Ω ±5%) [R288,R293,R296,R301,R316] 抵抗
	VRS-CZ1JD100J	AA	DD		C	Resistor(1/16W 10Ω ±5%) [R375,R440,R441,R447] 抵抗
75	VRS-CZ1JD101J	AA	DD		C	Resistor(1/16W 100Ω ±5%) [R10,R12,R32,R34,R38,R41] 抵抗
	VRS-CZ1JD101J	AA	DD		C	Resistor(1/16W 100Ω ±5%) [R42,R43,R44,R45,R68,R70] 抵抗
	VRS-CZ1JD101J	AA	DD		C	Resistor(1/16W 100Ω ±5%) [R97,R108,R110,R119,R120] 抵抗
	VRS-CZ1JD101J	AA	DD		C	Resistor(1/16W 100Ω ±5%) [R121,R122,R132,R176,R213] 抵抗
	VRS-CZ1JD101J	AA	DD		C	Resistor(1/16W 100Ω ±5%) [R214,R215,R216,R220,R222] 抵抗
	VRS-CZ1JD101J	AA	DD		C	Resistor(1/16W 100Ω ±5%) [R266,R267,R268,R271,R276] 抵抗
	VRS-CZ1JD101J	AA	DD		C	Resistor(1/16W 100Ω ±5%) [R279,R313,R319,R320,R332] 抵抗
	VRS-CZ1JD101J	AA	DD		C	Resistor(1/16W 100Ω ±5%) [R334,R349,R364,R368,R388] 抵抗
	VRS-CZ1JD101J	AA	DD		C	Resistor(1/16W 100Ω ±5%) [R389,R390,R391,R392,R393] 抵抗
	VRS-CZ1JD101J	AA	DD		C	Resistor(1/16W 100Ω ±5%) [R1012,R1013,R1015] 抵抗
	VRS-CZ1JD101J	AA	DD		C	Resistor(1/16W 100Ω ±5%) [R1052,R1053,R1077,R1078] 抵抗
	VRS-CZ1JD101J	AA	DD		C	Resistor(1/16W 100Ω ±5%) [R1081] 抵抗
76	VRS-CZ1JD102J	AA	DD		C	Resistor(1/16W 1KΩ ±5%) [R145,R166] 抵抗
	VRS-CZ1JD102J	AA	DD		C	Resistor(1/16W 1KΩ ±5%) [R232,R247,R295,R335] 抵抗
	VRS-CZ1JD102J	AA	DD		C	Resistor(1/16W 1KΩ ±5%) [R339,R348,R528,R595,R611] 抵抗
	VRS-CZ1JD102J	AA	DD		C	Resistor(1/16W 1KΩ ±5%) [R618,R643,R644,R648,R649] 抵抗
	VRS-CZ1JD102J	AA	DD		C	Resistor(1/16W 1KΩ ±5%) [R676,R684,R685,R686,R689] 抵抗
	VRS-CZ1JD102J	AA	DD		C	Resistor(1/16W 1KΩ ±5%) [R690,R708,R726,R727,R730] 抵抗
	VRS-CZ1JD102J	AA	DD		C	Resistor(1/16W 1KΩ ±5%) [R731,R732,R742,R744,R752] 抵抗
	VRS-CZ1JD102J	AA	DD		C	Resistor(1/16W 1KΩ ±5%) [R753,R754,R755,R756,R758] 抵抗
	VRS-CZ1JD102J	AA	DD		C	Resistor(1/16W 1KΩ ±5%) [R759,R760,R767,R768] 抵抗
	VRS-CZ1JD102J	AA	DD		C	Resistor(1/16W 1KΩ ±5%) [R802,R803,R804,R1005] 抵抗
	VRS-CZ1JD102J	AA	DD		C	Resistor(1/16W 1KΩ ±5%) [R1006,R1008,R1023] 抵抗
	VRS-CZ1JD102J	AA	DD		C	Resistor(1/16W 1KΩ ±5%) [R1028,R1029,R1030,R1031] 抵抗
	VRS-CZ1JD102J	AA	DD		C	Resistor(1/16W 1KΩ ±5%) [R1036,R1074,R1082,R1109] 抵抗
	VRS-CZ1JD102J	AA	DD		C	Resistor(1/16W 1KΩ ±5%) [R1115,R1116,R1117,R1121] 抵抗
	VRS-CZ1JD102J	AA	DD		C	Resistor(1/16W 1KΩ ±5%) [R124] 抵抗
	VRS-CZ1JD102J	AA	DD		C	Resistor(1/16W 1KΩ ±5%) (AR-C260F/C260FP) [R421,R471,R472] 抵抗
	VRS-CZ1JD102J	AA	DD		C	Resistor(1/16W 1KΩ ±5%) (AR-C260F/C260FP) [R795,R1009] 抵抗
77	VRS-CZ1JD103J	AA	DD		C	Resistor(1/16W 10KΩ ±5%) [R11,R28,R29,R33,R35,R46] 抵抗
	VRS-CZ1JD103J	AA	DD		C	Resistor(1/16W 10KΩ ±5%) [R116,R168,R169,R170,R172] 抵抗
	VRS-CZ1JD103J	AA	DD		C	Resistor(1/16W 10KΩ ±5%) [R174,R180,R233,R235,R238] 抵抗
	VRS-CZ1JD103J	AA	DD		C	Resistor(1/16W 10KΩ ±5%) [R241,R265,R280,R286,R290] 抵抗
	VRS-CZ1JD103J	AA	DD		C	Resistor(1/16W 10KΩ ±5%) [R291,R303,R314,R333,R350] 抵抗
	VRS-CZ1JD103J	AA	DD		C	Resistor(1/16W 10KΩ ±5%) [R362,R363,R373,R387,R394] 抵抗
	VRS-CZ1JD103J	AA	DD		C	Resistor(1/16W 10KΩ ±5%) [R415,R419,R428,R434,R435] 抵抗
	VRS-CZ1JD103J	AA	DD		C	Resistor(1/16W 10KΩ ±5%) [R442,R446,R448,R456,R468] 抵抗
	VRS-CZ1JD103J	AA	DD		C	Resistor(1/16W 10KΩ ±5%) [R474,R475,R476,R477,R480] 抵抗
	VRS-CZ1JD103J	AA	DD		C	Resistor(1/16W 10KΩ ±5%) [R481,R482,R483,R496,R497] 抵抗
	VRS-CZ1JD103J	AA	DD		C	Resistor(1/16W 10KΩ ±5%) [R498,R499,R500,R501,R546] 抵抗
	VRS-CZ1JD103J	AA	DD		C	Resistor(1/16W 10KΩ ±5%) [R567,R568,R579,R580,R586] 抵抗
	VRS-CZ1JD103J	AA	DD		C	Resistor(1/16W 10KΩ ±5%) [R587,R594,R614,R615,R616] 抵抗
	VRS-CZ1JD103J	AA	DD		C	Resistor(1/16W 10KΩ ±5%) [R617,R621,R622,R623,R624] 抵抗
	VRS-CZ1JD103J	AA	DD		C	Resistor(1/16W 10KΩ ±5%) [R627,R628,R629,R636,R637] 抵抗
	VRS-CZ1JD103J	AA	DD		C	Resistor(1/16W 10KΩ ±5%) [R638,R639,R645,R673,R679] 抵抗
	VRS-CZ1JD103J	AA	DD		C	Resistor(1/16W 10KΩ ±5%) [R680,R681,R688,R696] 抵抗
	VRS-CZ1JD103J	AA	DD		C	Resistor(1/16W 10KΩ ±5%) (AR-C260/C260S/C260M) [R703] 抵抗
	VRS-CZ1JD103J	AA	DD		C	Resistor(1/16W 10KΩ ±5%) (AR-C260F/C260FP)[R702] 抵抗
	VRS-CZ1JD103J	AA	DD		C	Resistor(1/16W 10KΩ ±5%) [R705,R706,R707,R710,R714] 抵抗
	VRS-CZ1JD103J	AA	DD		C	Resistor(1/16W 10KΩ ±5%) [R735,R736,R737,R738,R739] 抵抗
	VRS-CZ1JD103J	AA	DD		C	Resistor(1/16W 10KΩ ±5%) (AR-C260/C260S/C260M) [R740] 抵抗
	VRS-CZ1JD103J	AA	DD		C	Resistor(1/16W 10KΩ ±5%) (AR-C260F/C260FP) [R741,R1087] 抵抗
	VRS-CZ1JD103J	AA	DD		C	Resistor(1/16W 10KΩ ±5%) [R743,R745,R746,R747] 抵抗
	VRS-CZ1JD103J	AA	DD		C	Resistor(1/16W 10KΩ ±5%) [R748,R749,R750,R751,R785] 抵抗
	VRS-CZ1JD103J	AA	DD		C	Resistor(1/16W 10KΩ ±5%) [R796,R800,R801] 抵抗
	VRS-CZ1JD103J	AA	DD		C	Resistor(1/16W 10KΩ ±5%) [R1014,R1032,R1033,R1034] 抵抗
	VRS-CZ1JD103J	AA	DD		C	Resistor(1/16W 10KΩ ±5%) [R1035,R1037,R1055,R1056] 抵抗
	VRS-CZ1JD103J	AA	DD		C	Resistor(1/16W 10KΩ ±5%) [R1063,R1064,R1066,R1067] 抵抗
	VRS-CZ1JD103J	AA	DD		C	Resistor(1/16W 10KΩ ±5%) [R1068,R1069,R1070,R1071] 抵抗
	VRS-CZ1JD103J	AA	DD		C	Resistor(1/16W 10KΩ ±5%) [R1072,R1075,R1076] 抵抗
	VRS-CZ1JD103J	AA	DD		C	Resistor(1/16W 10KΩ ±5%) [R1089,R1112,R1113,R1114] 抵抗
	VRS-CZ1JD103J	AA	DD		C	Resistor(1/16W 10KΩ ±5%) [R1119] 抵抗
	VRS-CZ1JD103J	AA	DD		C	Resistor(1/16W 10KΩ ±5%) (AR-C260F/C260FP) [R422,R433,R438] 抵抗

53 ICU 基板 (ICU PWB)

NO.	PARTS CODE	PRICE RANK Ex.	PRICE RANK Ja.	NEW MARK	PART RANK	DESCRIPTION
77	VRS-CZ1JD103J	AA	DD		C	Resistor(1/16W 10KΩ ±5%) (AR-C260F/C260FP) [R466,R473] 抵抗
	VRS-CZ1JD103J	AA	DD		C	Resistor(1/16W 10KΩ ±5%) (AR-C260F/C260FP) [R484,R485,R494] 抵抗
	VRS-CZ1JD103J	AA	DD		C	Resistor(1/16W 10KΩ ±5%) (Except Japan) [R1073,R1079,R1080] 抵抗
78	VRS-CZ1JD105J	AA	DD		C	Resistor(1/16W 1.0MΩ ±5%) [R79,R125,R336] 抵抗
	VRS-CZ1JD105J	AA	DD		C	Resistor(1/16W 1.0MΩ ±5%) [R340,R1054] 抵抗
79	VRS-CZ1JD121J	AA	DD		C	Resistor(1/16W 120Ω ±5%) [R325,R326,R590] 抵抗
80	VRS-CZ1JD151J	AA	DD		C	Resistor(1/16W 150Ω ±5%) [R694] 抵抗
81	VRS-CZ1JD152J	AA	DD		C	Resistor(1/16W 1.5KΩ ±5%) [R83,R560] 抵抗
	VRS-CZ1JD152J	AA	DD		C	Resistor(1/16W 1.5KΩ ±5%) [R563,R574,R575,R786] 抵抗
82	VRS-CZ1JD182J	AA	DD		C	Resistor(1/16W 1.8KΩ ±5%) [R77] 抵抗
83	VRS-CZ1JD202J	AA	DD		C	Resistor(1/16W 2.0KΩ ±5%) [R682] 抵抗
84	VRS-CZ1JD271J	AA	DD		C	Resistor(1/16W 270Ω ±5%) [R591] 抵抗
	VRS-CZ1JD271J	AA	DD		C	Resistor(1/16W 270JΩ ±5%) [R78] 抵抗
85	VRS-CZ1JD272J	AA	DD		C	Resistor(1/16W 2.7KΩ ±5%) [R82] 抵抗
86	VRS-CZ1JD333J	AA	DD		C	Resistor(1/16W 33KΩ ±5%) (AR-C260F/C260FP)[R791] 抵抗
87	VRS-CZ1JD470J	AA	DD		C	Resistor(1/16W 47Ω ±5%) [R54,R55,R56,R59,R60,R61] 抵抗
	VRS-CZ1JD470J	AA	DD		C	Resistor(1/16W 47Ω ±5%) [R73,R74,R75,R128,R129] 抵抗
	VRS-CZ1JD470J	AA	DD		C	Resistor(1/16W 47Ω ±5%) [R130,R131,R159,R160,R161] 抵抗
	VRS-CZ1JD470J	AA	DD		C	Resistor(1/16W 47Ω ±5%) [R181,R182,R183,R195,R197] 抵抗
	VRS-CZ1JD470J	AA	DD		C	Resistor(1/16W 47Ω ±5%) [R199,R200,R201,R203,R204] 抵抗
	VRS-CZ1JD470J	AA	DD		C	Resistor(1/16W 47Ω ±5%) [R217,R218,R219,R223,R239] 抵抗
	VRS-CZ1JD470J	AA	DD		C	Resistor(1/16W 47Ω ±5%) [R242,R248,R262,R263,R264] 抵抗
	VRS-CZ1JD470J	AA	DD		C	Resistor(1/16W 47Ω ±5%) [R270,R275,R277,R278,R304] 抵抗
	VRS-CZ1JD470J	AA	DD		C	Resistor(1/16W 47Ω ±5%) [R310,R328,R346,R360,R361] 抵抗
	VRS-CZ1JD470J	AA	DD		C	Resistor(1/16W 47Ω ±5%) [R372,R379,R383,R385,R395] 抵抗
	VRS-CZ1JD470J	AA	DD		C	Resistor(1/16W 47Ω ±5%) [R396,R397,R398,R399,R406] 抵抗
	VRS-CZ1JD470J	AA	DD		C	Resistor(1/16W 47Ω ±5%) [R416,R418,R429,R443,R444] 抵抗
	VRS-CZ1JD470J	AA	DD		C	Resistor(1/16W 47Ω ±5%) [R445,R469,R503,R504,R505] 抵抗
	VRS-CZ1JD470J	AA	DD		C	Resistor(1/16W 47Ω ±5%) [R506,R507,R508,R509,R510] 抵抗
	VRS-CZ1JD470J	AA	DD		C	Resistor(1/16W 47Ω ±5%) [R511,R512,R513,R518,R519] 抵抗
	VRS-CZ1JD470J	AA	DD		C	Resistor(1/16W 47Ω ±5%) [R520,R521,R537,R538,R539] 抵抗
	VRS-CZ1JD470J	AA	DD		C	Resistor(1/16W 47Ω ±5%) [R540,R541,R542,R543,R544] 抵抗
	VRS-CZ1JD470J	AA	DD		C	Resistor(1/16W 47Ω ±5%) [R545,R547,R548,R549,R550] 抵抗
	VRS-CZ1JD470J	AA	DD		C	Resistor(1/16W 47Ω ±5%) [R551,R552,R553,R554,R565] 抵抗
	VRS-CZ1JD470J	AA	DD		C	Resistor(1/16W 47Ω ±5%) [R566,R569,R570,R577,R578] 抵抗
	VRS-CZ1JD470J	AA	DD		C	Resistor(1/16W 47Ω ±5%) [R581,R585,R593,R599,R600] 抵抗
	VRS-CZ1JD470J	AA	DD		C	Resistor(1/16W 47Ω ±5%) [R603,R606,R607,R608,R609] 抵抗
	VRS-CZ1JD470J	AA	DD		C	Resistor(1/16W 47Ω ±5%) [R612,R625,R631,R633,R634] 抵抗
	VRS-CZ1JD470J	AA	DD		C	Resistor(1/16W 47Ω ±5%) [R641,R642,R650,R653,R654] 抵抗
	VRS-CZ1JD470J	AA	DD		C	Resistor(1/16W 47Ω ±5%) [R655,R656,R657,R659,R660] 抵抗
	VRS-CZ1JD470J	AA	DD		C	Resistor(1/16W 47Ω ±5%) [R661,R662,R667,R668,R669] 抵抗
	VRS-CZ1JD470J	AA	DD		C	Resistor(1/16W 47Ω ±5%) [R670,R671,R674,R691,R692] 抵抗
	VRS-CZ1JD470J	AA	DD		C	Resistor(1/16W 47Ω ±5%) [R693,R695,R709,R711,R712] 抵抗
	VRS-CZ1JD470J	AA	DD		C	Resistor(1/16W 47Ω ±5%) [R713,R715,R716,R717,R718] 抵抗
	VRS-CZ1JD470J	AA	DD		C	Resistor(1/16W 47Ω ±5%) [R719,R720,R721,R722,R723] 抵抗
	VRS-CZ1JD470J	AA	DD		C	Resistor(1/16W 47Ω ±5%) [R724,R725,R728,R729,R733] 抵抗
	VRS-CZ1JD470J	AA	DD		C	Resistor(1/16W 47Ω ±5%) [R765,R772,R773,R774,R775] 抵抗
	VRS-CZ1JD470J	AA	DD		C	Resistor(1/16W 47Ω ±5%) [R776,R778,R780,R781,R782] 抵抗
	VRS-CZ1JD470J	AA	DD		C	Resistor(1/16W 47Ω ±5%) [R783,R784,R1018,R1019] 抵抗
	VRS-CZ1JD470J	AA	DD		C	Resistor(1/16W 47Ω ±5%) [R1020,R1021,R1038,R1039] 抵抗
	VRS-CZ1JD470J	AA	DD		C	Resistor(1/16W 47Ω ±5%) [R1057,R1058,R1059,R1060] 抵抗
	VRS-CZ1JD470J	AA	DD		C	Resistor(1/16W 47Ω ±5%) [R1065,R1090,R1091,R1093] 抵抗
	VRS-CZ1JD470J	AA	DD		C	Resistor(1/16W 47Ω ±5%) [R1094,R1106,R1108] 抵抗
	VRS-CZ1JD470J	AA	DD		C	Resistor(1/16W 47Ω ±5%) (AR-C260F/C260FP) [R514,R515,R516] 抵抗
	VRS-CZ1JD470J	AA	DD		C	Resistor(1/16W 47Ω ±5%) (AR-C260F/C260FP) [R517,R588] 抵抗
	VRS-CZ1JD470J	AA	DD		C	Resistor(1/16W 47Ω ±5%) (AR-C260F/C260FP) [R596,R597,R604] 抵抗
	VRS-CZ1JD470J	AA	DD		C	Resistor(1/16W 47Ω ±5%) (AR-C260F/C260FP) [R658,R663] 抵抗
	VRS-CZ1JD470J	AA	DD		C	Resistor(1/16W 47Ω ±5%) (AR-C260F/C260FP) [R664,R665,R666] 抵抗
	VRS-CZ1JD470J	AA	DD		C	Resistor(1/16W 47Ω ±5%) [R404] 抵抗
88	VRS-CZ1JD471J	AA	DD		C	Resistor(1/16W 470Ω ±5%) [R797] 抵抗
	VRS-CZ1JD471J	AA	DD		C	Resistor(1/16W 470Ω ±5%) [R798,R799] 抵抗
89	VRS-CZ1JD472J	AA	DD		C	Resistor(1/16W 4.7KΩ ±5%) [R788] 抵抗
90	VRS-CZ1JD473J	AA	DD		C	Resistor(1/16W 47KΩ ±5%) [R1084] 抵抗
91	VRS-CZ1JD680J	AA	DD		C	Resistor(1/16W 68JΩ ±5%) [R133,R140,R146,R153,R224] 抵抗
	VRS-CZ1JD680J	AA	DD		C	Resistor(1/16W 68JΩ ±5%) [R231,R254,R261] 抵抗
92	VS2SB1198K/-1	AC	DJ		B	Transistor(2SB1198K) (AR-C260F/C260FP)[Q35] ﾄﾗﾝｼﾞｽﾀｰ
93	VS2SC2412K/-1	AB	DD		B	Transistor(2SC2412K) (AR-C260F/C260FP)[Q36] ﾄﾗﾝｼﾞｽﾀｰ
94	VS2SJ243///-1	AD	DJ		B	Transistor(2SJ243) [FET2] ﾄﾗﾝｼﾞｽﾀｰ
	VS2SJ243///-1	AD	DJ		B	Transistor(2SJ243) (AR-C260F/C260FP)[FET4] ﾄﾗﾝｼﾞｽﾀｰ
95	VSDTC114YUA-1	AB	DJ		B	Transistor(DTC114YUA) [Q6,Q8,Q9,Q10] ﾄﾗﾝｼﾞｽﾀｰ
	VSDTC114YUA-1	AB	DJ		B	Transistor(DTC114YUA) [Q11,Q12,Q13,Q14,Q15,Q16] ﾄﾗﾝｼﾞｽﾀｰ
	VSDTC114YUA-1	AB	DJ		B	Transistor(DTC114YUA) [Q18,Q20,Q22,Q23,Q24,Q25] ﾄﾗﾝｼﾞｽﾀｰ

53 ICU 基板 (ICU PWB)

NO.	PARTS CODE	PRICE RANK Ex.	PRICE RANK Ja.	NEW MARK	PART RANK	DESCRIPTION
	VSDTC114YUA-1	AB	DJ		B	Transistor(DTC114YUA) [Q26,Q27,Q28,Q29,Q30,Q32] ﾄﾗﾝｼﾞｽﾀｰ
	VSDTC114YUA-1	AB	DJ		B	Transistor(DTC114YUA) [Q33,Q34,Q100,Q103,Q104] ﾄﾗﾝｼﾞｽﾀｰ
95	VSDTC114YUA-1	AB	DJ		B	Transistor(DTC114YUA) [Q105,Q106,Q107,Q108,Q109] ﾄﾗﾝｼﾞｽﾀｰ
	VSDTC114YUA-1	AB	DJ		B	Transistor(DTC114YUA) [Q110] ﾄﾗﾝｼﾞｽﾀｰ
	VSDTC114YUA-1	AB	DJ		B	Transistor(DTC114YUA) (AR-C260F/C260FP)[Q7] ﾄﾗﾝｼﾞｽﾀｰ
96	QCNCM0923FC10	AE	DS		C	Connector(10Pin) (Except Japan) [CN19] ｺﾈｸﾀ
	(Unit)					(Unit)
901	CPWBN1549DS54	CU	VW	N	E	ICU PWB UNIT (AR-C260S/C260M)[Japan] ICU 基板
	CPWBN1549DS55	CV	VZ	N	E	ICU PWB UNIT (AR-C260F/C260FP)[Japan] ICU 基板
	CPWBN1549DS57	CU	VW	N	E	ICU PWB UNIT (AR-C260/C260M)[Except Japan] ICU 基板

54 操作キー基板 (OPE KEY PWB)

NO.	PARTS CODE	PRICE RANK Ex.	PRICE RANK Ja.	NEW MARK	PART RANK	DESCRIPTION
1	QCNCM1171FCZZ	AE	DS		C	Connector(B6B-PH-SM3-TB) [CN2] ｺﾈｸﾀ
	QSW-P0005QSZZ	AC	DJ		B	Tact switch(B3F-6102) [SW1,SW2,SW3,SW4,SW5] ﾀｸﾄ ｽｲｯﾁ
3	QSW-P0005QSZZ	AC	DJ		B	Tact switch(B3F-6102) [SW6,SW7,SW9,SW10,SW11] ﾀｸﾄ ｽｲｯﾁ
	QSW-P0005QSZZ	AC	DJ		B	Tact switch(B3F-6102) [SW12,SW17,SW18,SW19,SW20] ﾀｸﾄ ｽｲｯﾁ
	QSW-P0005QSZZ	AC	DJ		B	Tact switch(B3F-6102) [SW21] ﾀｸﾄ ｽｲｯﾁ
4	QSW-P0469FCZZ	AD	DS		B	Push switch(SKHWAC) [SW8,SW13,SW14,SW15,SW16] ﾌﾟｯｼｭｽｲｯﾁ
5	RALMB1002LCZZ	AE	DS		B	Alarm(PKM13EPY-4000-TF01) [BZ1] ｱﾗｰﾑ
6	VCEAJU1CW476M	AB	DD		C	Capacitor(16WV 47μF) [C1] ｺﾝﾃﾞﾝｻｰ
7	VCKYPU1EB223Z	AB	DD		C	Capacitor(25WV 0.022μF) [C2] ｺﾝﾃﾞﾝｻｰ
8	VHDDSS133//-1	AA	DD		B	Diode(1SS133) [D1,D2] ﾀﾞｲｵｰﾄﾞ
	VHP1LHLE-002A	AC	DJ		B	LED(Green)(LTL-1LHLE-002A) [LED1,LED2,LED3] LED ﾐﾄﾞﾘ
9	VHP1LHLE-002A	AC	DJ		B	LED(Green)(LTL-1LHLE-002A) [LED4,LED5] LED ﾐﾄﾞﾘ
	VHP1LHLE-002A	AC	DJ		B	LED(Green)(LTL-1LHLE-002A) [LED6,LED7,LED8] LED ﾐﾄﾞﾘ
10	VHPLT9400E/-1	AK	EB		B	LED(LT9400E) [LED9,LED10] LED
11	VRD-HT2EY102J	AA	DD		C	Resistor(1/4W 1.0KΩ ±5%) [R17] 抵抗
12	VRD-HT2EY111J	AA	DD		C	Resistor(1/4W 110Ω ±5%) [R3] 抵抗
	VRD-HT2EY151J	AA	DD		C	Resistor(1/4W 150Ω ±5%) [R4,R6,R7,R8,R9] 抵抗
13	VRD-HT2EY151J	AA	DD		C	Resistor(1/4W 150Ω ±5%) [R10,R11,R12,R13,R14] 抵抗
	VRD-HT2EY151J	AA	DD		C	Resistor(1/4W 150Ω ±5%) [R15,R16] 抵抗
14	VRD-HT2EY302J	AA	DD		C	Resistor(1/4W 3.0KΩ ±5%) [R5] 抵抗
15	VRD-HT2EY473J	AA	DD		C	Resistor(1/4W 47KΩ ±5%) [R18,R19,R20,R21,R22] 抵抗
16	VRD-HT2EY682J	AA	DD		C	Resistor(1/4W 6.8KΩ ±5%) [R2] 抵抗
17	VRD-HT2EY911J	AA	DD		C	Resistor(1/4W 910Ω ±5%) [R1] 抵抗
18	VS2SC1740SR-1	AB	DD		B	Transistor(2SC1740SR) [Q1] ﾄﾗﾝｼﾞｽﾀｰ
	(Unit)					
901	CPWBF1525FCE1	BD	GJ	N	E	OPE KEY PWB UNIT 操作ｷｰ基板ﾕﾆｯﾄ

55 ﾄﾞﾗｲﾊﾞｰ基板 (DRIVER PWB)

NO.	PARTS CODE	PRICE RANK Ex.	PRICE RANK Ja.	NEW MARK	PART RANK	DESCRIPTION
1	QCNCM0672FCZZ	AB	DD		C	Connector(2pin) [CN9] ｺﾈｸﾀｰ
2	QCNCM0923FC12	AE	DJ		C	Connector(12pin) [CN3] ｺﾈｸﾀｰ
3	QCNCM0923FC3D	AF	DS		C	Connector(B34B-PHDSS)(34pin) [CN2] ｺﾈｸﾀｰ
4	QCNCM0931FCZZ	AF	DS		C	Connector(20pin) [CN8] ｺﾈｸﾀｰ
5	QCNCM1069AC0H	AE	DJ		C	Connector(8pin) [CN6] ｺﾈｸﾀｰ
6	QCNCM1069AC1J	AD	DJ		C	Connector(10pin) [CN5] ｺﾈｸﾀｰ
7	QCNCM7014SC0F	AB	DD		C	Connector(6pin) [CN1,CN4] ｺﾈｸﾀｰ
8	QCNCW0864FCZZ	AG	DX		C	Connector(12pin) [CN7] ｺﾈｸﾀｰ
⚠ 9	QFS-D1327QCZZ	AE	DS		A	Fuse(1.25A 250V) [F1] ﾋｭｰｽﾞ
10	QFSHB0028FCZZ	AC	DJ		C	Fuse holder(TP00351-31) [F1] ﾋｭｰｽﾞﾎﾙﾀﾞ
11	RC-KZ1054CCN2	AB	DD		C	Capacitor(RPE132-906) [C7,C17,C23,C29,C32,C33] ｺﾝﾃﾞﾝｻｰ
12	RMPTW4103QCJJ	AB	DD		B	Block resistor(10KΩ×4) [BR3] ﾌﾞﾛｯｸﾃｲｺｳ
13	RMPTW4473QCJJ	AB	DD		B	Resistor arrey(47kΩ×4 ±5%) [BR1,BR2] ﾃｲｺｳｱﾚｲ
14	VCEAGA1AW476M	AA	DD		C	Capacitor(10WV 47μF) [C30] ｺﾝﾃﾞﾝｻｰ
15	VCEAGA1CW106M	AA	DD		C	Capacitor(16WV 10μF) [C5,C6,C16,C22,C28,C44] ｺﾝﾃﾞﾝｻｰ
16	VCEAGU1VW108M	AE	DX		C	Capacitor(35WV 1000μF) [C31] ｺﾝﾃﾞﾝｻｰ
17	VCEAZA1VW476M	AC	DD		C	Capacitor(35WV 47μF) [C1,C2] ｺﾝﾃﾞﾝｻｰ
18	VCKYCZ1HB102K	AA	DD		C	Capacitor(50WV 1000pF) [C8,C9,C10,C11,C12] ｺﾝﾃﾞﾝｻｰ
	VCKYCZ1HB102K	AA	DD		C	Capacitor(50WV 1000pF) [C13,C14,C15] ｺﾝﾃﾞﾝｻｰ
19	VCKYCZ1HB222K	AA	DD		C	Capacitor(50WV 2200pF) [C18,C19,C24,C25,C34,C35] ｺﾝﾃﾞﾝｻｰ
20	VCKYCZ1HB471K	AA	DD		C	Capacitor(50WV 470pF) [C20,C21,C26,C27,C36,C37] ｺﾝﾃﾞﾝｻｰ
21	VHDDSM1D1//-1	AB	DJ		B	Diode(DSM1D1) [D1,D3,D5,D8] ﾀﾞｲｵｰﾄﾞ
22	VHDDSS133//-1	AA	DD		B	Diode(1SS133) [D2,D4,D6,D7,D9] ﾀﾞｲｵｰﾄﾞ
23	VHDRA13++++-1	AD	DJ		B	Diode(RA13) [D10] ﾀﾞｲｵｰﾄﾞ
24	VHiSLA7024MT/	AS	EQ		B	IC(SLA7024MT) [IC4,IC5,IC6] IC
25	VHiSLA7031M-1	AQ	EQ		B	IC(SLA7031M) [IC2] IC
26	VHiVHCT244T-1	AK	DX		B	IC(74VHCT244MTC) [IC1,IC3] IC

55 ﾄﾞﾗｲﾊﾞｰ基板 (DRIVER PWB)

NO.	PARTS CODE	PRICE RANK		NEW MARK	PART RANK	DESCRIPTION	
		Ex.	Ja.				
27	VRD-HT2EY242J	AA	DD		C	Resistor(1/4W 2.4KΩ ±5%)	[R1,R3,R6,R40] 抵抗
28	VRD-HT2EY104J	AA	DD		C	Resistor(1/4W 100KΩ ±5%)	[R5] 抵抗
29	VRD-HT2EY562J	AA	DD		C	Resistor(1/4W 5.6KΩ ±5%)	[R2,R4] 抵抗
30	VRS-CZ1JD102J	AA	DD		C	Resistor(1/16W 1KΩ ±5%)	[R7,R14,R23,R32] 抵抗
32	VRS-CZ1JD242J	AA	DD		C	Resistor(1/16W 2.4KΩ ±5%)	[R16,R17,R25,R26,R34,R35] 抵抗
33	VRS-CZ1JD271J	AA	DD		C	Resistor(1/16W 270Ω ±5%)	[R20,R29,R38] 抵抗
34	VRS-CZ1JD473J	AA	DD		C	Resistor(1/16W 47KΩ ±5%)	[R12,R13,R21,R22,R30,R31] 抵抗
35	VRS-HT3DA1R0J	AB	DD		C	Resistor(1/16W 2W 1.0Ω ±5%)	[R9,R10,R15,R18,R24] 抵抗
	VRS-HT3DA1R0J	AB	DD		C	Resistor(2W 1.0Ω ±5%)	[R27,R33,R36] 抵抗
38	VRD-HT2EY473J	AA	DD		C	Resistor(1/4W 47KΩ ±5%)	[R39] 抵抗
	(Unit)						
901	CPWBN1545FCE1	BQ	LP	N	E	DRIVER PWB	ﾄﾞﾗｲﾊﾞｰ基板ﾕﾆｯﾄ

56 LVDS/INV 基板 (LVDS/INV PWB UNIT)

NO.	PARTS CODE	PRICE RANK		NEW MARK	PART RANK	DESCRIPTION	
		Ex.	Ja.				
1	QCNCM0991FCZZ	AG	DX		C	Connector(30FMZ-BT)	[CN1] ｺﾈｸﾀｰ
2	QCNCM1172FCZZ	AL	EB	N	C	Connector(S02(8.0)B-BHS-L)	[CN3] ｺﾈｸﾀ
3	QCNCW1164FCZZ	AE	DJ	N	C	Connector(04FM-1.0BT)	[CN2] ｺﾈｸﾀ
4	QCNCW1165FCZZ	AG	DX	N	C	Connector(20FLS-SM1-TB)	[CN4] ｺﾈｸﾀ
⚠ 5	QFS-E1111QCZZ	AF	DS		A	Fuse(217.200(200mA/250V))	[F1] ﾋｭｰｽﾞ
6	QFSHB0028FCZZ	AC	DJ		C	Fuse holder(TP00351-31)	ﾋｭｰｽﾞﾎﾙﾀﾞ
7	RCiLF0068FCZZ	AF	DS		C	Coil(C-15389)	[L1] ｺｲﾙ
⚠ 8	RTRNZ0511FCZZ	AQ	EQ		B	Transformer(C-15099)	[T1] ﾄﾗﾝｽ
9	VCFYJU2JA103K	AC	DD		C	Capacitor(630WV 0.010μF)	[C3] ｺﾝﾃﾞﾝｻｰ
10	VCKYCZ1EF223Z	AA	DD		C	Capacitor(0.022μF/50V(1005))	[C1,C2] ｺﾝﾃﾞﾝｻｰ
11	VCKYCZ1HB471K	AA	DD		C	Capacitor(50WV 470pF)	[C6] ｺﾝﾃﾞﾝｻｰ
12	VCKYPU3SD150K	AC	DD		C	Capacitor(15pF/3KV)(CC45SL3FD150KYAN)	[C4] ｺﾝﾃﾞﾝｻｰ
13	VHH103AT-2/-1	AG	DS		B	Thermistor(103AT-2)	[TH1] ｻｰﾐｽﾀｰ
15	VRD-RC2EY103J	AA	DD		C	Resistor(1/4W 10KΩ ±5%)	[R9,R10] 抵抗
16	VRS-CZ1JD101J	AA	DD		C	Resistor(1/16W 100Ω ±5%)	[R1~R8] 抵抗
17	VS2SD1857A+-1	AB	DJ		B	Transistor(2SD1857ATV2)	[Q1,Q2] ﾄﾗﾝｼﾞｽﾀｰ
	(Unit)						
901	CPWBN1560FCE1	BM	HR	N	E	LVDS/INV PWB UNIT	LVDS/INV 基板ﾕﾆｯﾄ

57 FAX 電源基板ﾕﾆｯﾄ (FAX AC power supply unit)[AR-C260F/C260FP]

NO.	PARTS CODE	PRICE RANK		NEW MARK	PART RANK	DESCRIPTION	
		Ex.	Ja.				
1	0FT23040224//	AD	DJ		C	Angle(TC-92 30X36X1T)	[1] 金具
2	0FT23042251//	AP	EQ		C	Fin(AL1 30X30)	[2] ﾌｨﾝ
3	0FT23075095//	AP	EQ		C	Connector(B6P-VH)	[CN1] ｺﾈｸﾀ
4	0FT23194310//	AU	EZ		B	Thermistor(NTH11D8R0LA)	[TH1] ｻﾐｽﾀ
5	0FT23314081//	AU	EZ		B	IC(UPC393C)	[Z6] IC
7	0FT23423816//	AC	DJ		C	Screw(M3X8 S NP3 W・SW)	[5] 小ﾜｯｼｬ W ｾﾑｽﾈｼﾞ
8	0FT23432963//	AC	DJ		C	Screw(M3X10 S NP3 W.SW)	[6] 小ﾜｯｼｬ W ｾﾑｽﾈｼﾞ
9	0FT23485706//	AK	DX		C	Connector(B2B-PH-K-S)	[CN4] ｺﾈｸﾀ
10	0FT23559467//	AR	EQ		B	Transistor(2SC3588 HFE=L:K)	[Q11] ﾄﾗﾝｼﾞｽﾀ
11	0FT23562328//	AD	DJ		C	Resistor(RSMF2SL 68KΩJ)	[R2] 酸化金属被膜抵抗器
12	0FT23562379//	AD	DJ		C	Resistor(RSMF12SL 1ΩJ)	[R20] 酸化金属被膜抵抗器
13	0FT23562379//	AD	DJ		C	Resistor(RSMF12SL 1ΩJ)	[R83] 酸化金属被膜抵抗器
14	0FT23562549//	AD	DJ		C	Resistor(RSMF12SL 330ΩJ)	[R62] 酸化金属被膜抵抗器
15	0FT23562700//	AD	DJ		C	Resistor(RSMF12SL 47KΩJ)	[R13] 酸化金属被膜抵抗器
16	0FT23562700//	AD	DJ		C	Resistor(RSMF12SL 47KΩJ)	[R14] 酸化金属被膜抵抗器
17	0FT23562727//	AD	DJ		C	Resistor(RSMF12SL 100KΩJ)	[R54] 酸化金属被膜抵抗器
18	0FT23562816//	AC	DJ		C	Resistor(RSMF1SL 2.2ΩJ)	[R11] 酸化金属被膜抵抗器
19	0FT23562816//	AC	DJ		C	Resistor(RSMF1SL 2.2ΩJ)	[R12] 酸化金属被膜抵抗器
20	0FT23562859//	AD	DJ		C	Resistor(RSMF1SL 10ΩJ)	[R18] 酸化金属被膜抵抗器
21	0FT23563103//	AD	DJ		C	Resistor(RSMF1SL 47KΩJ)	[R4] 酸化金属被膜抵抗器
22	0FT23563103//	AD	DJ		C	Resistor(RSMF1SL 47KΩJ)	[R5] 酸化金属被膜抵抗器
23	0FT23563324//	AC	DJ		C	Resistor(RSMF2SL 100ΩJ)	[R10] 酸化金属被膜抵抗器
24	0FT23563324//	AC	DJ		C	Resistor(RSMF2SL 100ΩJ)	[R19] 酸化金属被膜抵抗器
25	0FT23598977//	AK	DX		C	Connector(B3B-PH-K-S)	[CN2] ｺﾈｸﾀ
26	0FT23611329//	AK	DX		C	Capacitor(MMC-104K400)	[C6] ﾌｨﾙﾑｺﾝﾃﾞﾝｻ
27	0FT23642925//	AK	DX		B	Reactor(TG0113MADS SK)	[L4] ﾘｱｸﾄﾙ
28	0FT23644634//	AK	DX		B	Variable resistor(EVM-4LGA00B13)	[RV1] 可変抵抗器
29	0FT23665429//	AU	EZ		B	IC(UPC78M24AHF)	[Z2] IC
30	0FT23671666//	AU	EZ		B	IC(UPC78M12AHF)	[Z1] IC
31	0FT23697355//	AU	EZ		B	Absorber(ERZV10D471)	[NR1] ｻｰｼﾞｱﾌﾞｿｰﾊﾞ
32	0FT23736903//	AX	FG		B	Rectifier(SF10SC4)	[RC2] 整流器
33	0FT23462226//	AD	DJ		C	Resistor(RK73K2ATD 470ΩJ)	[R34] ﾁｯﾌﾟ抵抗器
34	0FT23462226//	AD	DJ		C	Resistor(RK73K2ATD 470ΩJ)	[R65] ﾁｯﾌﾟ抵抗器
35	0FT23462234//	AD	DJ		C	Resistor(RK73K2ATD 1KΩJ)	[R30] ﾁｯﾌﾟ抵抗器

57 FAX 電源基板ﾕﾆｯﾄ (FAX AC power supply unit)[AR-C260F/C260FP]

NO.	PARTS CODE	PRICE RANK		NEW MARK	PART RANK	DESCRIPTION	
		Ex.	Ja.				
36	0FT23462234//	AD	DJ		C	Resistor(RK73K2ATD 1KΩJ)	[R35] ﾁｯﾌﾟ抵抗器
37	0FT23462234//	AD	DJ		C	Resistor(RK73K2ATD 1KΩJ)	[R41] ﾁｯﾌﾟ抵抗器
38	0FT23462234//	AD	DJ		C	Resistor(RK73K2ATD 1KΩJ)	[R44] ﾁｯﾌﾟ抵抗器
39	0FT23462250//	AD	DJ		C	Resistor(RK73K2ATD 2.2KΩJ)	[R38] ﾁｯﾌﾟ抵抗器
40	0FT23462250//	AD	DJ		C	Resistor(RK73K2ATD 2.2KΩJ)	[R39] ﾁｯﾌﾟ抵抗器
41	0FT23462250//	AD	DJ		C	Resistor(RK73K2ATD 2.2KΩJ)	[R52] ﾁｯﾌﾟ抵抗器
42	0FT23462250//	AD	DJ		C	Resistor(RK73K2ATD 2.2KΩJ)	[R66] ﾁｯﾌﾟ抵抗器
43	0FT23462250//	AD	DJ		C	Resistor(RK73K2ATD 2.2KΩJ)	[R68] ﾁｯﾌﾟ抵抗器
44	0FT23462269//	AD	DJ		C	Resistor(RK73K2ATD 10KΩJ)	[R8] ﾁｯﾌﾟ抵抗器
45	0FT23462269//	AD	DJ		C	Resistor(RK73K2ATD 10KΩJ)	[R17] ﾁｯﾌﾟ抵抗器
46	0FT23462269//	AD	DJ		C	Resistor(RK73K2ATD 10KΩJ)	[R48] ﾁｯﾌﾟ抵抗器
47	0FT23462293//	AD	DJ		C	Resistor(RK73K2ATD 560ΩJ)	[R31] ﾁｯﾌﾟ抵抗器
48	0FT23463362//	AD	DJ		C	Resistor(RK73K2ATD 180ΩJ)	[R42] ﾁｯﾌﾟ抵抗器
49	0FT23536106//	AD	DJ		C	Resistor(RK73K2ATD 1.5KΩJ)	[RX2] ﾁｯﾌﾟ抵抗器
50	0FT23536106//	AD	DJ		C	Resistor(RK73K2ATD 1.5KΩJ)	[R22] ﾁｯﾌﾟ抵抗器
51	0FT23536106//	AD	DJ		C	Resistor(RK73K2ATD 1.5KΩJ)	[R59] ﾁｯﾌﾟ抵抗器
52	0FT23538850//	AD	DJ		C	Resistor(RK73K2ATD 4.7KΩJ)	[R46] ﾁｯﾌﾟ抵抗器
53	0FT23538850//	AD	DJ		C	Resistor(RK73K2ATD 4.7KΩJ)	[R67] ﾁｯﾌﾟ抵抗器
54	0FT23538885//	AD	DJ		C	Resistor(RK73K2ATD 100ΩJ)	[R69] ﾁｯﾌﾟ抵抗器
55	0FT23538915//	AD	DJ		C	Resistor(RK73K2ATD 5.6KΩJ)	[R71] ﾁｯﾌﾟ抵抗器
56	0FT23538923//	AD	DJ		C	Resistor(RK73K2ATD 3.9KΩJ)	[R37] ﾁｯﾌﾟ抵抗器
57	0FT23538974//	AD	DJ		C	Resistor(RK73K2ATD 2.7KΩJ)	[R7] ﾁｯﾌﾟ抵抗器
58	0FT23538982//	AD	DJ		C	Resistor(RK73K2ATD 47ΩJ)	[R23] ﾁｯﾌﾟ抵抗器
59	0FT23541509//	AK	DX		B	Zener diode(RD8.2M-B2)	[D11] ﾁｯﾌﾟﾂｪﾅｰﾀﾞｲｵｰﾄﾞ
60	0FT23546047//	AD	DJ		C	Resistor(RK73K2ATD 100KΩJ)	[R57] ﾁｯﾌﾟ抵抗器
61	0FT23546047//	AD	DJ		C	Resistor(RK73K2ATD 100KΩJ)	[R63] ﾁｯﾌﾟ抵抗器
62	0FT23549119//	AF	DS		C	Capacitor(GRM40R103K25PT)	[C10] ﾁｯﾌﾟｾﾗﾐｯｸｺﾝﾃﾞﾝｻ
63	0FT23549119//	AF	DS		C	Capacitor(GRM40R103K25PT)	[C13] ﾁｯﾌﾟｾﾗﾐｯｸｺﾝﾃﾞﾝｻ
64	0FT23549119//	AF	DS		C	Capacitor(GRM40R103K25PT)	[C14] ﾁｯﾌﾟｾﾗﾐｯｸｺﾝﾃﾞﾝｻ
65	0FT23549119//	AF	DS		C	Capacitor(GRM40R103K25PT)	[C39] ﾁｯﾌﾟｾﾗﾐｯｸｺﾝﾃﾞﾝｻ
66	0FT23549119//	AF	DS		C	Capacitor(GRM40R103K25PT)	[C50] ﾁｯﾌﾟｾﾗﾐｯｸｺﾝﾃﾞﾝｻ
67	0FT23549119//	AF	DS		C	Capacitor(GRM40R103K25PT)	[C54] ﾁｯﾌﾟｾﾗﾐｯｸｺﾝﾃﾞﾝｻ
68	0FT23549119//	AF	DS		C	Capacitor(GRM40R103K25PT)	[C55] ﾁｯﾌﾟｾﾗﾐｯｸｺﾝﾃﾞﾝｻ
69	0FT23551148//	AK	DX		B	Zener diode(RD12M-B2-T1)	[D5] ﾁｯﾌﾟﾂｪﾅｰﾀﾞｲｵｰﾄﾞ
70	0FT23551377//	AK	DX		B	Diode(SFPM-52VL)	[D62] ﾁｯﾌﾟﾀﾞｲｵｰﾄﾞ
71	0FT23557111//	AD	DJ		C	Resistor(RK73K2ATD 220ΩJ)	[R21] ﾁｯﾌﾟ抵抗器
72	0FT23565505//	AD	DJ		C	Resistor(RK73K2ATD 220KΩJ)	[R56] ﾁｯﾌﾟ抵抗器
73	0FT23578194//	AD	DJ		C	Resistor(RK73K2ATD 22ΩJ)	[R43] ﾁｯﾌﾟ抵抗器
74	0FT23578194//	AD	DJ		C	Resistor(RK73K2ATD 22ΩJ)	[R51] ﾁｯﾌﾟ抵抗器
75	0FT23581330//	AD	DJ		C	Capacitor(GRM40R104K25PT)	[CX1] ﾁｯﾌﾟｾﾗﾐｯｸｺﾝﾃﾞﾝｻ
76	0FT23581330//	AD	DJ		C	Capacitor(GRM40R104K25PT)	[CX2] ﾁｯﾌﾟｾﾗﾐｯｸｺﾝﾃﾞﾝｻ
77	0FT23581330//	AD	DJ		C	Capacitor(GRM40R104K25PT)	[C36] ﾁｯﾌﾟｾﾗﾐｯｸｺﾝﾃﾞﾝｻ
78	0FT23583309//	AG	DX		B	Zener diode(RD5.6M-B2-T1)	[D42] ﾁｯﾌﾟﾂｪﾅｰﾀﾞｲｵｰﾄﾞ
79	0FT23598470//	AG	DX		B	Zener diode(RD10M-B2-T1)	[D46] ﾁｯﾌﾟﾂｪﾅｰﾀﾞｲｵｰﾄﾞ
80	0FT23624293//	AD	DJ		C	Resistor(RK73K2ATD 27KΩJ)	[R16] ﾁｯﾌﾟ抵抗器
81	0FT23625591//	AD	DJ		C	Resistor(RK73K2ATD 1.8KΩJ)	[R36] ﾁｯﾌﾟ抵抗器
82	0FT23625591//	AD	DJ		C	Resistor(RK73K2ATD 1.8KΩJ)	[R40] ﾁｯﾌﾟ抵抗器
83	0FT23663914//	AD	DJ		C	Resistor(RK73K2ATD 5.1KΩJ)	[R33] ﾁｯﾌﾟ抵抗器
84	0FT33122675//	AF	DS		B	Diode(KDS184RTK)	[D6] ﾁｯﾌﾟﾀﾞｲｵｰﾄﾞ
85	0FT33122675//	AF	DS		B	Diode(KDS184RTK)	[D10] ﾁｯﾌﾟﾀﾞｲｵｰﾄﾞ
86	0FT33122675//	AF	DS		B	Diode(KDS184RTK)	[D12] ﾁｯﾌﾟﾀﾞｲｵｰﾄﾞ
87	0FT33122675//	AF	DS		B	Diode(KDS184RTK)	[D44] ﾁｯﾌﾟﾀﾞｲｵｰﾄﾞ
88	0FT33122675//	AF	DS		B	Diode(KDS184RTK)	[D45] ﾁｯﾌﾟﾀﾞｲｵｰﾄﾞ
89	0FT33122675//	AF	DS		B	Diode(KDS184RTK)	[D47] ﾁｯﾌﾟﾀﾞｲｵｰﾄﾞ
90	0FT33122675//	AF	DS		B	Diode(KDS184RTK)	[D54] ﾁｯﾌﾟﾀﾞｲｵｰﾄﾞ
91	0FT33122675//	AF	DS		B	Diode(KDS184RTK)	[D55] ﾁｯﾌﾟﾀﾞｲｵｰﾄﾞ
92	0FT33122675//	AF	DS		B	Diode(KDS184RTK)	[D61] ﾁｯﾌﾟﾀﾞｲｵｰﾄﾞ
93	0FT33122675//	AF	DS		B	Diode(KDS184RTK)	[D63] ﾁｯﾌﾟﾀﾞｲｵｰﾄﾞ
94	0FT33122675//	AF	DS		B	Diode(KDS184RTK)	[D66] ﾁｯﾌﾟﾀﾞｲｵｰﾄﾞ
95	0FT33189184//	AD	DJ		C	Capacitor(GRM40-034R104K50PT)	[C24] ﾁｯﾌﾟｾﾗﾐｯｸｺﾝﾃﾞﾝｻ
96	0FT23095657//	AF	DS		B	Transister(2SC1815-Y:GR TPE2)	[Q2] ﾄﾗﾝｼﾞｽﾀ
97	0FT23095657//	AF	DS		B	Transister(2SC1815-Y:GR TPE2)	[Q7] ﾄﾗﾝｼﾞｽﾀ
98	0FT23095657//	AF	DS		B	Transister(2SC1815-Y:GR TPE2)	[Q9] ﾄﾗﾝｼﾞｽﾀ
99	0FT23095657//	AF	DS		B	Transister(2SC1815-Y:GR TPE2)	[Q12] ﾄﾗﾝｼﾞｽﾀ
100	0FT23124819//	AK	DX		C	Capacitor(KME25VB-220 TC-04)	[C27] 電解ｺﾝﾃﾞﾝｻ
101	0FT23124827//	AF	DS		C	Capacitor(KME25VB-47 TC-04)	[C29] 電解ｺﾝﾃﾞﾝｻ
102	0FT23204782//	AP	EQ		C	Capacitor(KME35VB-220 TC-04)	[C23] 電解ｺﾝﾃﾞﾝｻ
103	0FT23204790//	AP	EQ		C	Capacitor(KME35VB-100 TC-04)	[C17] 電解ｺﾝﾃﾞﾝｻ
104	0FT23204790//	AP	EQ		C	Capacitor(KME35VB-100 TC-04)	[C25] 電解ｺﾝﾃﾞﾝｻ
105	0FT23241823//	AP	EQ		B	Diode(EG01ZV0)	[D36] ﾀﾞｲｵｰﾄﾞ
106	0FT23259382//	AP	EQ		C	Capacitor(KME10VB-470 TC-04)	[C37] 電解ｺﾝﾃﾞﾝｻ
107	0FT23259420//	AP	EQ		C	Capacitor(KME35VB-470 TC-04)	[C20] 電解ｺﾝﾃﾞﾝｻ
108	0FT23259447//	AK	DX		C	Capacitor(KME50VB-1 TC-04)	[C34] 電解ｺﾝﾃﾞﾝｻ
109	0FT23259498//	AK	DX		C	Capacitor(KME50VB-10 TC-04)	[C15] 電解ｺﾝﾃﾞﾝｻ
110	0FT23259498//	AK	DX		C	Capacitor(KME50VB-10 TC-04)	[C35] 電解ｺﾝﾃﾞﾝｻ
111	0FT23259498//	AK	DX		C	Capacitor(KME50VB-10 TC-04)	[C56] 電解ｺﾝﾃﾞﾝｻ
112	0FT23287629//	AK	DX		B	Transister(2SA1015-Y TPE2)	[Q6] ﾄﾗﾝｼﾞｽﾀ
113	0FT23287637//	AP	EQ		B	Transister(2SA1020-O:Y TPE6)	[Q4] ﾄﾗﾝｼﾞｽﾀ
114	0FT23287696//	AP	EQ		B	Transister(2SC3225 TPE6)	[Q3] ﾄﾗﾝｼﾞｽﾀ
115	0FT23287823//	AK	DX		C	Capacitor(KME50VB-22 TC-04)	[C21] 電解ｺﾝﾃﾞﾝｻ

57 FAX 電源基板ﾕﾆｯﾄ (FAX AC power supply unit)[AR-C260F/C260FP]

NO.	PARTS CODE	PRICE RANK Ex.	PRICE RANK Ja.	NEW MARK	PART RANK	DESCRIPTION	
116	0FT23319431//	AF	DS		B	Diode(1SS119-14 TD)	[D64] ﾀﾞｲｵｰﾄﾞ
117	0FT23319431//	AF	DS		B	Diode(1SS119-14 TD)	[D65] ﾀﾞｲｵｰﾄﾞ
118	0FT23326101//	AU	EZ		C	Capacitor(KME200VB-22 TC-04)	[C48] 電解ｺﾝﾃﾞﾝｻ
119	0FT23329089//	AK	DX		C	Capacitor(KME50VB-47 TC-04)	[C18] 電解ｺﾝﾃﾞﾝｻ
120	0FT23329089//	AK	DX		C	Capacitor(KME50VB-47 TC-04)	[C42] 電解ｺﾝﾃﾞﾝｻ
121	0FT23379450//	AU	EZ		B	IC(AN1431T-TA)	[Z7] IC
122	0FT23379450//	AU	EZ		B	IC(AN1431T-TA)	[Z8] IC
123	0FT23394395//	AU	EZ		C	Capacitor(KME10VB-3300 TC-03)	[C32] 電解ｺﾝﾃﾞﾝｻ
124	0FT23414892//	AF	DS		C	Resistor(RDF14 TS 820ΩJ)	[R9] ｶｰﾎﾞﾝ抵抗器
125	0FT23415341//	AF	DS		C	Resistor(RDMF14 TS 22ΩJ)	[R60] ｶｰﾎﾞﾝ抵抗器
126	0FT23415430//	AF	DS		C	Resistor(RDMF14 TS 100ΩJ)	[R82] ｶｰﾎﾞﾝ抵抗器
127	0FT23415570//	AF	DS		C	Resistor(RDMF14 TS 1KΩJ)	[RX1] ｶｰﾎﾞﾝ抵抗器
128	0FT23415570//	AF	DS		C	Resistor(RDMF14 TS 1KΩJ)	[RX5] ｶｰﾎﾞﾝ抵抗器
129	0FT23415570//	AF	DS		C	Resistor(RDMF14 TS 1KΩJ)	[RX6] ｶｰﾎﾞﾝ抵抗器
130	0FT23415600//	AF	DS		C	Resistor(RDMF14 TS 1.8KΩJ)	[R89] ｶｰﾎﾞﾝ抵抗器
131	0FT23415643//	AF	DS		C	Resistor(RDMF14 TS 3.9KΩJ)	[R58] ｶｰﾎﾞﾝ抵抗器
132	0FT23415651//	AF	DS		C	Resistor(RDMF14 TS 4.7KΩJ)	[R49] ｶｰﾎﾞﾝ抵抗器
133	0FT23415716//	AF	DS		C	Resistor(RDMF14 TS 10KΩJ)	[R53] ｶｰﾎﾞﾝ抵抗器
134	0FT23415740//	AF	DS		C	Resistor(RDMF14 TS 15KΩJ)	[R45] ｶｰﾎﾞﾝ抵抗器
135	0FT23415899//	AF	DS		C	Resistor(RDMF14 TS 100KΩJ)	[R55] ｶｰﾎﾞﾝ抵抗器
136	0FT23429199//	AK	DX		B	Diode(AK04V0)	[D14] ﾀﾞｲｵｰﾄﾞ
137	0FT23484661//	AD	DJ		C	Resistor(RSMF12TS 0.22ΩJ)	[R84] 酸化金属被膜抵抗器
138	0FT23486796//	AK	DX		C	Capacitor(DE0905-979R471K2K)	[C11] ｾﾗﾐｯｸｺﾝﾃﾞﾝｻ
139	0FT23486850//	AK	DX		C	Capacitor(ECQ-B1H473KF4)	[C12] ﾌｨﾙﾑｺﾝﾃﾞﾝｻ
140	0FT23486850//	AK	DX		C	Capacitor(ECQ-B1H473KF4)	[C16] ﾌｨﾙﾑｺﾝﾃﾞﾝｻ
141	0FT23543641//	AK	DX		C	Fuse holder(EYF-52BCZ)	[F1] ﾌｭｰｽﾞﾎﾙﾀﾞｰ
142	0FT23605507//	AK	DX		B	Diode(1GU42 TPA3)	[D7] ﾀﾞｲｵｰﾄﾞ
143	0FT23605507//	AK	DX		B	Diode(1GU42 TPA3)	[D9] ﾀﾞｲｵｰﾄﾞ
144	0FT23605507//	AK	DX		B	Diode(1GU42 TPA3)	[D13] ﾀﾞｲｵｰﾄﾞ
145	0FT23605507//	AK	DX		B	Diode(1GU42 TPA3)	[D43] ﾀﾞｲｵｰﾄﾞ
146	0FT23610810//	AK	DX		B	Diode(S5688GTPA3)	[D1] ﾀﾞｲｵｰﾄﾞ
147	0FT23610810//	AK	DX		B	Diode(S5688GTPA3)	[D3] ﾀﾞｲｵｰﾄﾞ
148	0FT23610810//	AK	DX		B	Diode(S5688GTPA3)	[D8] ﾀﾞｲｵｰﾄﾞ
149	0FT23610810//	AK	DX		B	Diode(S5688GTPA3)	[D20] ﾀﾞｲｵｰﾄﾞ
150	0FT23610810//	AK	DX		B	Diode(S5688GTPA3)	[D21] ﾀﾞｲｵｰﾄﾞ
151	0FT23610810//	AK	DX		B	Diode(S5688GTPA3)	[D22] ﾀﾞｲｵｰﾄﾞ
152	0FT23610810//	AK	DX		B	Diode(S5688GTPA3)	[D23] ﾀﾞｲｵｰﾄﾞ
153	0FT23610810//	AK	DX		B	Diode(S5688GTPA3)	[D48] ﾀﾞｲｵｰﾄﾞ
154	0FT23624285//	AK	DX		B	Diode(EG01CV0)	[D52] ﾀﾞｲｵｰﾄﾞ
155	0FT23690482//	AD	DJ		C	Resistor(RSMF12TS 10ΩJ)	[R32] 酸化金属被膜抵抗器
156	0FT23752267//	AD	DJ		C	Resistor(RSMF12TS 2.2ΩJ)	[R50] 酸化金属被膜抵抗器
157	0FT23752267//	AD	DJ		C	Resistor(RSMF12TS 2.2ΩJ)	[R86] 酸化金属被膜抵抗器
158	0FT33005385//	AD	DJ		C	Resistor(RSMF12TS 4.7KΩJ)	[R87] 酸化金属被膜抵抗器
159	0FT33036442//	AD	DJ		C	Resistor(RSMF12TS 180ΩJ)	[R61] 酸化金属被膜抵抗器
160	0FT33055277//	AK	DX		C	Terminal(TP00448-41)	[4] 端子
161	0FT33186711//	AR	EQ		B	Transister(2SA1625-T HFE=M:L)	[Q8] ﾄﾗﾝｼﾞｽﾀ
162	0FT33213786//	AK	DX		C	Capacitor(DE1007-486E222M-KH)	[C2] ｾﾗﾐｯｸｺﾝﾃﾞﾝｻ
163	0FT33213786//	AK	DX		C	Capacitor(DE1007-486E222M-KH)	[C3] ｾﾗﾐｯｸｺﾝﾃﾞﾝｻ
164	0FT33295049//	AK	DX		C	Capacitor(DE0605-979SL470J2K)	[C7] ｾﾗﾐｯｸｺﾝﾃﾞﾝｻ
165	0FT33388799//	AP	EQ		C	Capacitor(DE1207-486E332M-KH)	[C8] ｾﾗﾐｯｸｺﾝﾃﾞﾝｻ
166	0FT33552203//	AD	DJ		C	Resistor(RSPF12TS 470KΩJ)	[R1] 電力形被膜抵抗器
167	0FT33570120//	AD	DJ		C	Resistor(RSPF12TS 150KΩJ)	[R90] 電力形被膜抵抗器
168	0FT33008015//	AW	FG		B	Rectifier(D2SB60)	[RC1] 整流器
169	0FT33035349//	AK	DX		B	Diode(RL2Z LF-A1)	[D38] ﾀﾞｲｵｰﾄﾞ
170	0FT33085427//	AU	EZ		B	Transister(2SA1400 HFE=K)	[Q10] ﾄﾗﾝｼﾞｽﾀ
⚠ 171	0FT33146922//	AK	DX		A	Fuse(51S040L AC125V 4A)	[F1] ｶﾞﾗｽ管ﾌｭｰｽﾞ
172	0FT33173377//	BA	FX		B	Reactle(LF-4D-E822)	[L1] ﾘｱｸﾄﾙ
173	0FT33197209//	BA	FX		B	Photocoupler(TLP747J(D4) 0884)	[PC2] ﾌｫﾄｶﾌﾟﾗ
174	0FT33199031//	AW	FG		B	Transister(2SC4130-O.Y)	[Q1] ﾄﾗﾝｼﾞｽﾀ
175	0FT33213581//	AP	EQ		C	Fin(ST-S 20G PT1 15X35X10)	[9] ﾌｨﾝ
176	0FT33262132//	AP	EQ		B	Photocoupler(PC123FY2)	[PC1] ﾌｫﾄｶﾌﾟﾗ
177	0FT33262132//	AP	EQ		B	Photocoupler(PC123FY2)	[PC3] ﾌｫﾄｶﾌﾟﾗ
178	0FT33293976//	AF	DS		C	Capacitor(DD104-63CH470J50)	[C38] ｾﾗﾐｯｸｺﾝﾃﾞﾝｻ
179	0FT33331673//	AZ	FQ		B	Regurator(UPC29M33HF)	[Z4] IC ﾚｷﾞｭﾚｰﾀ
180	0FT33441622//	AL	EB		C	Capacitor(ECQU2A104ML P=15.0MM)	[C4] ﾌｨﾙﾑｺﾝﾃﾞﾝｻ
181	0FT33441630//	AP	EQ		C	Capacitor(ECQU2A224ML P=15.0MM)	[C1] ﾌｨﾙﾑｺﾝﾃﾞﾝｻ
182	0FT33478232//	AZ	FQ		C	Capacitor(HU4 2D 331MRXS3SS DIA22X30L)	[C5] 電解ｺﾝﾃﾞﾝｻ
183	0FT33509685//	AP	EQ		C	Connector(B04B-XASK-1-A)	[CN3] ｺﾈｸﾀ
184	0FT33529090//	AP	EQ		C	Tarminal(85163 #250)	[L] ﾌｧｽﾄﾝ端子
185	0FT33529090//	AP	EQ		C	Tarminal(85163 #250)	[L1F] ﾌｧｽﾄﾝ端子
186	0FT33529090//	AP	EQ		C	Tarminal(85163 #250)	[N] ﾌｧｽﾄﾝ端子
187	0FT33529090//	AP	EQ		C	Tarminal(85163 #250)	[N1F] ﾌｧｽﾄﾝ端子
188	0FT33568266//	BA	FX		B	Relay(SDT-S-112LMR)	[RL3] ﾘﾚｰ
189	0FT33570163//	AF	DS		C	Resistor(RSPF1B 150KΩJ)	[R24] 電力形被膜抵抗器
190	0FT33570163//	AF	DS		C	Resistor(RSPF1B 150KΩJ)	[R25] 電力形被膜抵抗器
191	0FT33603762//	BB	GD		B	IC(PQ12RF1)	[Z3] IC
192	0FT33603789//	BF	GN		B	Transformer(CXM41100-505)	[T1] 変圧器
193	0FT33638361//	BC	GJ		B	Relay(G2R-1A-E-TV8-ASI DC12V)	[RL1] ﾘﾚｰ
194	0FT33638361//	BC	GJ		B	Relay(G2R-1A-E-TV8-ASI DC12V)	[RL2] ﾘﾚｰ
⚠ 195	0FT35863281//	BF	GN		B	Transformer(EXT43420-635C)	[T2] 変圧器

57 FAX 電源基板ﾕﾆｯﾄ (FAX AC power supply unit)[AR-C260F/C260FP]

NO.	PARTS CODE	PRICE RANK Ex.	PRICE RANK Ja.	NEW MARK	PART RANK	DESCRIPTION
	(Unit)					
901	RDENC0004FCZZ	BV	RB		E	FAX AC power supply unit FAX AC 電源ﾕﾆｯﾄ

58 PRTC 基板 (PRTC PWB)[AR-C260M/C260FP]

NO.	PARTS CODE	PRICE RANK Ex.	PRICE RANK Ja.	NEW MARK	PART RANK	DESCRIPTION
1	PCAPH0010GCZZ	AD	DJ		C	Cap(JM-2W-96) [JP1,JP3,JP7] ｷｬｯﾌﾟ
2	PCOVP1468FCZZ	AD	DJ		D	FAX battery cover [BT1] FAX ﾃﾞﾝﾁｶﾊﾞｰ
3	PRDAR0057FCZ1	AF	DS	N	C	Heat sink(C16UG16-30) [IC12] ﾎｳﾈﾂﾊﾞﾝ
4	PRDAF0089FCZZ	AU	EZ		C	Heat Sink(MI-MBA25101-23W/2.54BU) [IC26] ﾎｳﾈﾂﾊﾞﾝ
5	PSHEZ4684FCZZ	AC	DJ		C	Sheet(2067B) [IC12] ｸｰﾙｼｰﾄ
6	QCNCM1182FCZZ	AM	EG		C	Connector (Board to Board) (100pin PCI CN)(100P9.2-JXKS-GB) [CN12,CN8] ｺﾈｸﾀｰ
7	QCNCM1183FCZZ	AM	EG		C	Connector (Board to Board) (100pin PCI CN)(100P15.2-JXKS-GB) [CN9] ｺﾈｸﾀｰ
8	QCNCP0340QCZZ	AC	DJ		C	Connector(3pin) [CN14] ｺﾈｸﾀｰ
9	QSOCN0002ESZZ	AH	DX		C	Socket(RBE42-36K11) [CN15] ｿｹｯﾄ
10	QCNCW1190FCZZ	AN	EG		C	Connector (Board to Board)(TX24-100R-LT-H1) [CN1] ｺﾈｸﾀ -
11	QPiN-0003GCZZ	AC	DJ		C	Pin(T3B-SQ) [JP1,JP3,JP7] ﾋﾟﾝ
12	QSOCN0005ESZZ	AE	DS		C	Socket(UBR234K2200) [CN13] ｿｹｯﾄ
13	QSOCZ0001QSZZ	AL	EB		C	Socket(DMM168-FLAA2-3A133) [CN10,CN11] ｿｹｯﾄ
14	QSOCZ0002QSZZ	AD	DJ		C	IC socket [IC20] IC ｿｹｯﾄ
15	QSOCZ0073FCNA	AL	EB		C	DIMM Socket(72pin Flash DIMM)(DMM2-SD72A-113) [CN3,CN4,CN6,CN7] DIMM ｿｹｯﾄ
16	RCiLZ0353AFZZ	AH	DX		C	Chock coil(PLP3216S121SL2)(Typ120Ω) [L8] ｺﾓﾝﾓｰﾄﾞﾁｮｰｸｺｲﾙ
17	RCORF1057ACZZ	AB	DJ		C	Ferrite beads(BLM21P221SG) [L6,L9,L11] ﾌｪﾗｲﾄﾋﾞｰｽﾞ
18	RCRSP0080FCZZ	AF	DS		B	Crystal(16.345MHz)(AT-51,16.345MHz) [Y3] ｸﾘｽﾀﾙ
20	RCRSP6676RCZZ	AG	DX		B	Crystal(32.768KHz) [Y1] ｸﾘｽﾀﾙ
21	RFiLN0048FCZZ	AC	DJ		C	Chip Inductor(BLM10B121SBPTM) [L3,L4] ｲﾝﾀﾞｸﾀｰ
22	RH-iX1013ACZZ	BK	HC		B	SDRAM (256Mb)(W982516BH-75) [IC27,IC32,IC39,IC46] SDRAM (256Mb)
23	RMPTR4100ACZZ	AB	DD		B	Block resistor(10Ω×4) [BR22,BR23,BR24,BR25,BR26] ﾌﾞﾛｯｸﾃｲｺｳ
	RMPTR4100ACZZ	AB	DD		B	Block resistor(10Ω×4) [BR27,BR28,BR29,BR30,BR31] ﾌﾞﾛｯｸﾃｲｺｳ
	RMPTR4100ACZZ	AB	DD		B	Block resistor(10Ω×4) [BR32,BR33,BR34,BR35,BR36] ﾌﾞﾛｯｸﾃｲｺｳ
	RMPTR4100ACZZ	AB	DD		B	Block resistor(10Ω×4) [BR40,BR41,BR42,BR43,BR47] ﾌﾞﾛｯｸﾃｲｺｳ
	RMPTR4100ACZZ	AB	DD		B	Block resistor(10Ω×4) [BR48,BR50,BR53,BR55,BR58] ﾌﾞﾛｯｸﾃｲｺｳ
	RMPTR4100ACZZ	AB	DD		B	Block resistor(10Ω×4) [BR60,BR80,BR83,BR84,BR85] ﾌﾞﾛｯｸﾃｲｺｳ
	RMPTR4100ACZZ	AB	DD		B	Block resistor(10Ω×4) [BR86,BR87,BR88,BR89,BR90] ﾌﾞﾛｯｸﾃｲｺｳ
	RMPTR4100ACZZ	AB	DD		B	Block resistor(10Ω×4) [BR92,BR93,BR94,BR95,BR96,BR97] ﾌﾞﾛｯｸﾃｲｺｳ
24	RMPTR4103ACZZ	AB	DD		B	Block resistor(10KΩ×4) [BR1,BR2,BR3,BR4,BR5] ﾌﾞﾛｯｸﾃｲｺｳ
	RMPTR4103ACZZ	AB	DD		B	Block resistor(10KΩ×4) [BR6,BR7,BR8,BR9,BR10] ﾌﾞﾛｯｸﾃｲｺｳ
	RMPTR4103ACZZ	AB	DD		B	Block resistor(10KΩ×4) [BR11,BR12,BR21,BR49,BR51] ﾌﾞﾛｯｸﾃｲｺｳ
	RMPTR4103ACZZ	AB	DD		B	Block resistor(10KΩ×4) [BR54,BR57,BR61,BR62,BR64] ﾌﾞﾛｯｸﾃｲｺｳ
	RMPTR4103ACZZ	AB	DD		B	Block resistor(10KΩ×4) [BR65,BR66,BR68,BR69,BR70] ﾌﾞﾛｯｸﾃｲｺｳ
	RMPTR4103ACZZ	AB	DD		B	Block resistor(10KΩ×4) [BR71,BR73,BR78,BR81,BR82,BR91] ﾌﾞﾛｯｸﾃｲｺｳ
25	RMPTR4330ACZZ	AB	DD		B	Block resistor(33Ω×4) [BR13, BR14,BR15,BR16,BR17] ﾌﾞﾛｯｸﾃｲｺｳ
	RMPTR4330ACZZ	AB	DD		B	Block resistor(33Ω×4) [BR18,BR19,BR20,BR37,BR38] ﾌﾞﾛｯｸﾃｲｺｳ
	RMPTR4330ACZZ	AB	DD		B	Block resistor(33Ω×4) [BR39,BR44,BR45,BR46,BR52] ﾌﾞﾛｯｸﾃｲｺｳ
	RMPTR4330ACZZ	AB	DD		B	Block resistor(33Ω×4) [BR56,BR59,BR63,BR67,BR72] ﾌﾞﾛｯｸﾃｲｺｳ
	RMPTR4330ACZZ	AB	DD		B	Block resistor(33Ω×4) [BR74,BR75,BR76,BR77,BR79] ﾌﾞﾛｯｸﾃｲｺｳ
	RMPTR4330ACZZ	AB	DD		B	Block resistor(33Ω×4) [BR98,BR99,BR100,BR101,BR102] ﾌﾞﾛｯｸﾃｲｺｳ
	RMPTR4330ACZZ	AB	DD		B	Block resistor(33Ω×4) [BR103,BR104,BR105,BR106] ﾌﾞﾛｯｸﾃｲｺｳ
⚠ 26	UBATL2033SCZZ	AK	EB		B	Battery(CR2032-H03) [BT1] ﾊﾞｯﾃﾘｰ
27	VCAAPF0JJ107M	AF	DS		C	Capacitor(PXA 100μF/6.3V)(PXA6.3VC100MF60) [C53,C106,C327] ｺﾝﾃﾞﾝｻｰ
28	VCCCCZ1HH101J	AA	DD		C	Capacitor(50WV 100pF) [C293,C294,C295,C296,C297] ｺﾝﾃﾞﾝｻｰ
	VCCCCZ1HH101J	AA	DD		C	Capacitor(50WV 100pF) [C298,C299,C300,C301,C302] ｺﾝﾃﾞﾝｻｰ
	VCCCCZ1HH101J	AA	DD		C	Capacitor(50WV 100pF) [C303,C304,C305,C306,C307] ｺﾝﾃﾞﾝｻｰ
	VCCCCZ1HH101J	AA	DD		C	Capacitor(50WV 100pF) [C308,C309] ｺﾝﾃﾞﾝｻｰ
29	VCCCCZ1HH220J	AA	DD		C	Capacitor(50WV 22pF) [C153,C176,C286,C290,C329,C330] ｺﾝﾃﾞﾝｻｰ
30	VCEAPH1VC225M	AC	DD		C	Capacitor(2.2μF/35V) [C146,C147,C148,C149,C193] ｺﾝﾃﾞﾝｻｰ
	VCEAPH1VC225M	AC	DD		C	Capacitor(2.2μF/35V) [C199,C256,C257] ｺﾝﾃﾞﾝｻｰ
31	VCEAPS1AC227M	AD	DJ		C	Capacitor(220μF/10V (MVY)) [C2,C44,C45,C276,C277] ｺﾝﾃﾞﾝｻｰ
32	VCEAPS1CC106M	AC	DD		C	Capacitor(16WV 10μF) [C21,C38,C271,C272] ｺﾝﾃﾞﾝｻｰ
33	VCEAPS1CC226M	AC	DJ		C	Capacitor(22μF/16V) [C57,C102,C279,C314] ｺﾝﾃﾞﾝｻｰ
34	VCEAPS1CC476M	AC	DJ		C	Capacitor(47μF/16V) [C31,C39,C52,C118,C139] ｺﾝﾃﾞﾝｻｰ
	VCEAPS1CC476M	AC	DJ		C	Capacitor(47μF/16V) [C194,C260] ｺﾝﾃﾞﾝｻｰ
35	VCEAPZ1EW107M	AD	DJ		C	Capacitor(25WV 100μF) [C20] ｺﾝﾃﾞﾝｻｰ
37	VCKYCZ1CF104Z	AB	DD		C	Capacitor(16WV 0.1μF) [C3,C4,C5,C6,C10] ｺﾝﾃﾞﾝｻｰ
	VCKYCZ1CF104Z	AB	DD		C	Capacitor(16WV 0.1μF) [C12,C23,C24,C25,C26] ｺﾝﾃﾞﾝｻｰ
	VCKYCZ1CF104Z	AB	DD		C	Capacitor(16WV 0.1μF) [C28,C29,C30,C32,C33] ｺﾝﾃﾞﾝｻｰ
	VCKYCZ1CF104Z	AB	DD		C	Capacitor(16WV 0.1μF) [C35,C36,C37,C40,C41] ｺﾝﾃﾞﾝｻｰ
	VCKYCZ1CF104Z	AB	DD		C	Capacitor(16WV 0.1μF) [C42,C46,C51,C54,C55] ｺﾝﾃﾞﾝｻｰ
	VCKYCZ1CF104Z	AB	DD		C	Capacitor(16WV 0.1μF) [C56,C58,C59,C61,C62] ｺﾝﾃﾞﾝｻｰ

58 PRTC 基板 (PRTC PWB)[AR-C260M/C260FP]

NO.	PARTS CODE	PRICE RANK		NEW MARK	PART RANK	DESCRIPTION		
		Ex.	Ja.					
	VCKYCZ1CF104Z	AB	DD		C	Capacitor(16WV 0.1μF)	[C67,C68,C70,C71,C72]	ｺﾝﾃﾞﾝｻｰ
	VCKYCZ1CF104Z	AB	DD		C	Capacitor(16WV 0.1μF)	[C74,C75,C77,C78,C79]	ｺﾝﾃﾞﾝｻｰ
	VCKYCZ1CF104Z	AB	DD		C	Capacitor(16WV 0.1μF)	[C80,C81,C88,C89,C91]	ｺﾝﾃﾞﾝｻｰ
	VCKYCZ1CF104Z	AB	DD		C	Capacitor(16WV 0.1μF)	[C92,C93,C94,C95,C96]	ｺﾝﾃﾞﾝｻｰ
	VCKYCZ1CF104Z	AB	DD		C	Capacitor(16WV 0.1μF)	[C97,C101,C103,C107,C108]	ｺﾝﾃﾞﾝｻｰ
	VCKYCZ1CF104Z	AB	DD		C	Capacitor(16WV 0.1μF)	[C110,C112,C113,C114,C117]	ｺﾝﾃﾞﾝｻｰ
	VCKYCZ1CF104Z	AB	DD		C	Capacitor(16WV 0.1μF)	[C119,C120,C121,C122,C127]	ｺﾝﾃﾞﾝｻｰ
	VCKYCZ1CF104Z	AB	DD		C	Capacitor(16WV 0.1μF)	[C128,C129,C130,C131,C132]	ｺﾝﾃﾞﾝｻｰ
	VCKYCZ1CF104Z	AB	DD		C	Capacitor(16WV 0.1μF)	[C134,C136,C138,C140,C143]	ｺﾝﾃﾞﾝｻｰ
	VCKYCZ1CF104Z	AB	DD		C	Capacitor(16WV 0.1μF)	[C144,C145,C155,C160,C161]	ｺﾝﾃﾞﾝｻｰ
	VCKYCZ1CF104Z	AB	DD		C	Capacitor(16WV 0.1μF)	[C166,C167,C169,C174,C175]	ｺﾝﾃﾞﾝｻｰ
37	VCKYCZ1CF104Z	AB	DD		C	Capacitor(16WV 0.1μF)	[C177,C180,C182,C185,C189]	ｺﾝﾃﾞﾝｻｰ
	VCKYCZ1CF104Z	AB	DD		C	Capacitor(16WV 0.1μF)	[C190,C191,C192,C196,C200]	ｺﾝﾃﾞﾝｻｰ
	VCKYCZ1CF104Z	AB	DD		C	Capacitor(16WV 0.1μF)	[C201,C203,C204,C205,C217]	ｺﾝﾃﾞﾝｻｰ
	VCKYCZ1CF104Z	AB	DD		C	Capacitor(16WV 0.1μF)	[C218,C219,C220,C223,C224]	ｺﾝﾃﾞﾝｻｰ
	VCKYCZ1CF104Z	AB	DD		C	Capacitor(16WV 0.1μF)	[C225,C226,C230,C231,C232]	ｺﾝﾃﾞﾝｻｰ
	VCKYCZ1CF104Z	AB	DD		C	Capacitor(16WV 0.1μF)	[C234,C235,C236,C238,C240]	ｺﾝﾃﾞﾝｻｰ
	VCKYCZ1CF104Z	AB	DD		C	Capacitor(16WV 0.1μF)	[C241,C242,C243,C245,C247]	ｺﾝﾃﾞﾝｻｰ
	VCKYCZ1CF104Z	AB	DD		C	Capacitor(16WV 0.1μF)	[C248,C250,C251,C252,C253]	ｺﾝﾃﾞﾝｻｰ
	VCKYCZ1CF104Z	AB	DD		C	Capacitor(16WV 0.1μF)	[C254,C255,C258,C259,C261]	ｺﾝﾃﾞﾝｻｰ
	VCKYCZ1CF104Z	AB	DD		C	Capacitor(16WV 0.1μF)	[C263,C264,C265,C266,C267]	ｺﾝﾃﾞﾝｻｰ
	VCKYCZ1CF104Z	AB	DD		C	Capacitor(16WV 0.1μF)	[C268,C274,C278,C280,C281]	ｺﾝﾃﾞﾝｻｰ
	VCKYCZ1CF104Z	AB	DD		C	Capacitor(16WV 0.1μF)	[C282,C283,C284,C285,C287]	ｺﾝﾃﾞﾝｻｰ
	VCKYCZ1CF104Z	AB	DD		C	Capacitor(16WV 0.1μF)	[C292,C315,C316,C322,C323]	ｺﾝﾃﾞﾝｻｰ
	VCKYCZ1HB102K	AA	DD		C	Capacitor(50WV 1000pF)	[C69,C84,C87,C90,C111]	ｺﾝﾃﾞﾝｻｰ
38	VCKYCZ1HB102K	AA	DD		C	Capacitor(50WV 1000pF)	[C116,C123,C142,C163,C164]	ｺﾝﾃﾞﾝｻｰ
	VCKYCZ1HB102K	AA	DD		C	Capacitor(50WV 1000pF)	[C195,C202,C273,C331]	ｺﾝﾃﾞﾝｻｰ
	VCKYCZ1HF103Z	AA	DD		C	Capacitor(0.01μF/50V)	[C9,C11,C47,C48,C49]	ｺﾝﾃﾞﾝｻｰ
	VCKYCZ1HF103Z	AA	DD		C	Capacitor(0.01μF/50V)	[C50,C60,C63,C64,C65]	ｺﾝﾃﾞﾝｻｰ
	VCKYCZ1HF103Z	AA	DD		C	Capacitor(0.01μF/50V)	[C66,C73,C76,C82,C83]	ｺﾝﾃﾞﾝｻｰ
39	VCKYCZ1HF103Z	AA	DD		C	Capacitor(0.01μF/50V)	[C86,C98,C99,C100,C104]	ｺﾝﾃﾞﾝｻｰ
	VCKYCZ1HF103Z	AA	DD		C	Capacitor(0.01μF/50V)	[C105,C109,C115,C124,C133]	ｺﾝﾃﾞﾝｻｰ
	VCKYCZ1HF103Z	AA	DD		C	Capacitor(0.01μF/50V)	[C135,C137,C162,C165,C181]	ｺﾝﾃﾞﾝｻｰ
	VCKYCZ1HF103Z	AA	DD		C	Capacitor(0.01μF/50V)	[C221,C229,C237,C239,C249]	ｺﾝﾃﾞﾝｻｰ
	VCKYCZ1HF103Z	AA	DD		C	Capacitor(0.01μF/50V)	[C262,C288,C289,C328,C332]	ｺﾝﾃﾞﾝｻｰ
40	VHDRB051L40-1	AE	DS		B	Diode(RB051L40)	[D5]	ﾀﾞｲｵｰﾄﾞ
41	VHDRB451F//-1	AD	DS		B	Diode(RB451F)	[D3,D4,D6,D8,D9]	ﾀﾞｲｵｰﾄﾞ
42	VHi107AP66C-1	BX	TF		B	Microcontroller(XPC107APX66LC)	[IC40]	IC
43	VHi1085CZAD-1	AH	DX		B	Voltage Regulator(PJ1085CZ)	[IC12]	IC
44	VHi2309SC1H-1	AT	EZ		B	Zero Delay Buffer(CY2309SC-1H)	[IC29]	IC
45	VHi60852ATB-1	AX	FG		B	USB Controller(ML60852ATB)	[IC45]	IC
46	VHi74LCX08MTC	AE	DJ		B	IC(74LCX08MTC)	[IC28,IC1]	IC
47	VHi74LCX14MTC	AE	DJ		B	IC(74LCX14MTC)	[IC2,IC8,IC36]	IC
	VHi74LCX244MT	AM	DX		B	IC(74LCX244MT)	[IC3,IC4,IC6,IC7,IC9]	IC
48	VHi74LCX244MT	AM	DX		B	IC(74LCX244MT)	[IC10,IC18,IC19,IC21,IC23]	IC
	VHi74LCX244MT	AM	DX		B	IC(74LCX244MT)	[IC24,IC25]	IC
49	VHi74LCX245MT	AM	DX		B	IC(74LCX245MT)	[IC14,IC15,IC16,IC17,IC52]	IC
50	VHi74LVX16128	AP	EQ		B	IC(74LVX16128)	[IC48]	ﾄﾞﾗｲﾊﾞ IC
51	VHi755B300E-1	BZ	TF		B	CPU(XPC755BPX300LE)	[IC26]	IC
52	VHi7SZ125M5-1	AE	DS		B	LOGIC(NC7SZ125M5X)	[IC44]	IC
55	VHiD3032+++-1	AX	FG	N	B	ASIC(D3032)	[IC31]	IC
56	VHiD8501A+++-1	BS	MW	N	B	ASIC(D8501A)	[IC22]	IC
57	VHiEES04L400P	AG	DX		B	EEPROM(CAT24WC04P)	[IC20]	EEPROM
60	VHiNJM2903M/-	AD	DJ		B	IC(NJM2903M)	[IC37]	IC
61	VHiNJU6356E-1	AK	DX		B	IC(NJU6356E)	[IC38]	IC
62	VHiPST598DN-1	AF	DS		B	Reset IC(PST598DNR)	[IC34]	IC
63	VHiPST598iN-1	AF	DS		B	IC(PST598I)	[IC33]	IC
64	VHiR1117D25-1	AG	DS		B	Voltage Regulator(RC1117D25X)	[IC49]	IC
	VRS-CZ1JD000J	AA	DD		C	Resistor(1/16W 0Ω ±5%)	[R6,R12,R13,R14,R15]	抵抗
	VRS-CZ1JD000J	AA	DD		C	Resistor(1/16W 0Ω ±5%)	[R19,R21,R23,R24,R25]	抵抗
	VRS-CZ1JD000J	AA	DD		C	Resistor(1/16W 0Ω ±5%)	[R26,R27,R28,R29,R30]	抵抗
	VRS-CZ1JD000J	AA	DD		C	Resistor(1/16W 0Ω ±5%)	[R33,R34,R35,R36,R37]	抵抗
	VRS-CZ1JD000J	AA	DD		C	Resistor(1/16W 0Ω ±5%)	[R38,R39,R41,R52,R54]	抵抗
	VRS-CZ1JD000J	AA	DD		C	Resistor(1/16W 0Ω ±5%)	[R55,R56,R57,R58,R59]	抵抗
	VRS-CZ1JD000J	AA	DD		C	Resistor(1/16W 0Ω ±5%)	[R60,R66,R82,R83,R105]	抵抗
	VRS-CZ1JD000J	AA	DD		C	Resistor(1/16W 0Ω ±5%)	[R109,R118,R122,R124,R146]	抵抗
	VRS-CZ1JD000J	AA	DD		C	Resistor(1/16W 0Ω ±5%)	[R148,R150,R151,R152,R156]	抵抗
	VRS-CZ1JD000J	AA	DD		C	Resistor(1/16W 0Ω ±5%)	[R157,R158,R159,R160,R166]	抵抗
67	VRS-CZ1JD000J	AA	DD		C	Resistor(1/16W 0Ω ±5%)	[R171,R173,R175,R201,R229]	抵抗
	VRS-CZ1JD000J	AA	DD		C	Resistor(1/16W 0Ω ±5%)	[R238,R241,R245,R250,R254]	抵抗
	VRS-CZ1JD000J	AA	DD		C	Resistor(1/16W 0Ω ±5%)	[R267,R268,R269,R270,R271]	抵抗
	VRS-CZ1JD000J	AA	DD		C	Resistor(1/16W 0Ω ±5%)	[R273,R280,R294,R296,R300]	抵抗
	VRS-CZ1JD000J	AA	DD		C	Resistor(1/16W 0Ω ±5%)	[R306,R307,R313,R314,R315]	抵抗
	VRS-CZ1JD000J	AA	DD		C	Resistor(1/16W 0Ω ±5%)	[R316,R321,R325,R333,R345]	抵抗
	VRS-CZ1JD000J	AA	DD		C	Resistor(1/16W 0Ω ±5%)	[R348,R369,R371,R373,R383]	抵抗
	VRS-CZ1JD000J	AA	DD		C	Resistor(1/16W 0Ω ±5%)	[R384,R396,R397,R398,R399]	抵抗
	VRS-CZ1JD000J	AA	DD		C	Resistor(1/16W 0Ω ±5%)	[R400,R409,R410,R421,R443]	抵抗
	VRS-CZ1JD000J	AA	DD		C	Resistor(1/16W 0Ω ±5%)	[R445,R468,R493,R521,R532]	抵抗
	VRS-CZ1JD000J	AA	DD		C	Resistor(1/16W 0Ω ±5%)	[R537,R540,R548,R549,R555]	抵抗
	VRS-CZ1JD000J	AA	DD		C	Resistor(1/16W 0Ω ±5%)	[R556,R557,R558,R566,R574]	抵抗

58 PRTC 基板 (PRTC PWB)[AR-C260M/C260FP]

NO.	PARTS CODE	PRICE RANK Ex.	PRICE RANK Ja.	NEW MARK	PART RANK	DESCRIPTION
67	VRS-CZ1JD000J	AA	DD		C	Resistor(1/16W 0Ω ±5%) [R604,R607,R608,R611,R612] 抵抗
	VRS-CZ1JD000J	AA	DD		C	Resistor(1/16W 0Ω ±5%) [R615,R618,R620] 抵抗
68	VRS-CZ1JD100J	AA	DD		C	Resistor(1/16W 10Ω ±5%) [R169,R178,R179,R180,R181] 抵抗
	VRS-CZ1JD100J	AA	DD		C	Resistor(1/16W 10Ω ±5%) [R182,R184,R185,R187,R188] 抵抗
	VRS-CZ1JD100J	AA	DD		C	Resistor(1/16W 10Ω ±5%) [R189,R190,R191,R194,R195] 抵抗
	VRS-CZ1JD100J	AA	DD		C	Resistor(1/16W 10Ω ±5%) [R196,R200,R203,R206,R208] 抵抗
	VRS-CZ1JD100J	AA	DD		C	Resistor(1/16W 10Ω ±5%) [R210,R213,R217,R218,R222] 抵抗
	VRS-CZ1JD100J	AA	DD		C	Resistor(1/16W 10Ω ±5%) [R223,R224,R225,R227,R228] 抵抗
	VRS-CZ1JD100J	AA	DD		C	Resistor(1/16W 10Ω ±5%) [R236,R243,R248,R259,R260] 抵抗
	VRS-CZ1JD100J	AA	DD		C	Resistor(1/16W 10Ω ±5%) [R261,R264,R266,R299,R308] 抵抗
	VRS-CZ1JD100J	AA	DD		C	Resistor(1/16W 10Ω ±5%) [R317,R318,R319,R320,R322] 抵抗
	VRS-CZ1JD100J	AA	DD		C	Resistor(1/16W 10Ω ±5%) [R323,R324,R337,R352,R353] 抵抗
	VRS-CZ1JD100J	AA	DD		C	Resistor(1/16W 10Ω ±5%) [R388,R389,R391,R392,R411] 抵抗
	VRS-CZ1JD100J	AA	DD		C	Resistor(1/16W 10Ω ±5%) [R412,R413,R414,R415,R434] 抵抗
	VRS-CZ1JD100J	AA	DD		C	Resistor(1/16W 10Ω ±5%) [R455,R465,R467,R490,R499] 抵抗
	VRS-CZ1JD100J	AA	DD		C	Resistor(1/16W 10Ω ±5%) [R501,R504,R507,R513,R545] 抵抗
	VRS-CZ1JD100J	AA	DD		C	Resistor(1/16W 10Ω ±5%) [R634,R635] 抵抗
69	VRS-CZ1JD102J	AA	DD		C	Resistor(1/16W 1KΩ ±5%) [R1,R3,R7,R8,R11] 抵抗
	VRS-CZ1JD102J	AA	DD		C	Resistor(1/16W 1KΩ ±5%) [R20,R42,R45,R62,R64] 抵抗
	VRS-CZ1JD102J	AA	DD		C	Resistor(1/16W 1KΩ ±5%) [R68,R94,R100,R102,R107] 抵抗
	VRS-CZ1JD102J	AA	DD		C	Resistor(1/16W 1KΩ ±5%) [R117,R255,R338,R366,R380] 抵抗
	VRS-CZ1JD102J	AA	DD		C	Resistor(1/16W 1KΩ ±5%) [R405,R422,R423,R424,R436] 抵抗
	VRS-CZ1JD102J	AA	DD		C	Resistor(1/16W 1KΩ ±5%) [R437,R452,R562,R595,R596] 抵抗
	VRS-CZ1JD102J	AA	DD		C	Resistor(1/16W 1KΩ ±5%) [R597,R598,R599,R600,R601] 抵抗
	VRS-CZ1JD102J	AA	DD		C	Resistor(1/16W 1KΩ ±5%) [R605,R614,R616] 抵抗
70	VRS-CZ1JD103J	AA	DD		C	Resistor(1/16W 10KΩ ±5%) [R5,R61,R63,R71,R80] 抵抗
	VRS-CZ1JD103J	AA	DD		C	Resistor(1/16W 10KΩ ±5%) [R90,R99,R103,R108,R141] 抵抗
	VRS-CZ1JD103J	AA	DD		C	Resistor(1/16W 10KΩ ±5%) [R142,R143,R144,R161,R162] 抵抗
	VRS-CZ1JD103J	AA	DD		C	Resistor(1/16W 10KΩ ±5%) [R167,R183,R186,R192,R197] 抵抗
	VRS-CZ1JD103J	AA	DD		C	Resistor(1/16W 10KΩ ±5%) [R198,R199,R207,R211,R214] 抵抗
	VRS-CZ1JD103J	AA	DD		C	Resistor(1/16W 10KΩ ±5%) [R215,R216,R221,R226,R230] 抵抗
	VRS-CZ1JD103J	AA	DD		C	Resistor(1/16W 10KΩ ±5%) [R231,R232,R239,R240,R242] 抵抗
	VRS-CZ1JD103J	AA	DD		C	Resistor(1/16W 10KΩ ±5%) [R244,R246,R247,R249,R262] 抵抗
	VRS-CZ1JD103J	AA	DD		C	Resistor(1/16W 10KΩ ±5%) [R263,R272,R278,R282,R283] 抵抗
	VRS-CZ1JD103J	AA	DD		C	Resistor(1/16W 10KΩ ±5%) [R284,R285,R286,R288,R290] 抵抗
	VRS-CZ1JD103J	AA	DD		C	Resistor(1/16W 10KΩ ±5%) [R301,R302,R304,R305,R310] 抵抗
	VRS-CZ1JD103J	AA	DD		C	Resistor(1/16W 10KΩ ±5%) [R311,R312,R350,R351,R354] 抵抗
	VRS-CZ1JD103J	AA	DD		C	Resistor(1/16W 10KΩ ±5%) [R355,R356,R357,R359,R364] 抵抗
	VRS-CZ1JD103J	AA	DD		C	Resistor(1/16W 10KΩ ±5%) [R365,R367,R385,R390,R406] 抵抗
	VRS-CZ1JD103J	AA	DD		C	Resistor(1/16W 10KΩ ±5%) [R420,R429,R435,R438,R440] 抵抗
	VRS-CZ1JD103J	AA	DD		C	Resistor(1/16W 10KΩ ±5%) [R446,R454,R469,R470,R471] 抵抗
	VRS-CZ1JD103J	AA	DD		C	Resistor(1/16W 10KΩ ±5%) [R475,R476,R484,R495,R496] 抵抗
	VRS-CZ1JD103J	AA	DD		C	Resistor(1/16W 10KΩ ±5%) [R497,R503,R506,R509,R512] 抵抗
	VRS-CZ1JD103J	AA	DD		C	Resistor(1/16W 10KΩ ±5%) [R514,R516,R517,R519,R520] 抵抗
	VRS-CZ1JD103J	AA	DD		C	Resistor(1/16W 10KΩ ±5%) [R523,R526,R527,R530,R534] 抵抗
	VRS-CZ1JD103J	AA	DD		C	Resistor(1/16W 10KΩ ±5%) [R542,R543,R559,R561,R563,R564] 抵抗
71	VRS-CZ1JD105J	AA	DD		C	Resistor(1/16W 1.0MΩ ±5%) [R485,R539] 抵抗
73	VRS-CZ1JD152J	AA	DD		C	Resistor(1/16W 1.5KΩ ±5%) [R550] 抵抗
74	VRS-CZ1JD201J	AA	DD		C	Resistor(1/16W 200Ω ±5%) [R2,R4,R174,R293,R339] 抵抗
	VRS-CZ1JD201J	AA	DD		C	Resistor(1/16W 200Ω ±5%) [R340,R602] 抵抗
75	VRS-CZ1JD220J	AA	DD		C	Resistor(1/16W 22Ω ±5%) [R40,R69,R73,R78,R79] 抵抗
	VRS-CZ1JD220J	AA	DD		C	Resistor(1/16W 22Ω ±5%) [R81,R139,R341,R343,R360] 抵抗
	VRS-CZ1JD220J	AA	DD		C	Resistor(1/16W 22Ω ±5%) [R361,R362,R363,R378,R379] 抵抗
	VRS-CZ1JD220J	AA	DD		C	Resistor(1/16W 22Ω ±5%) [R393,R394,R401,R402,R408] 抵抗
	VRS-CZ1JD220J	AA	DD		C	Resistor(1/16W 22Ω ±5%) [R426,R427,R428,R449,R451] 抵抗
	VRS-CZ1JD220J	AA	DD		C	Resistor(1/16W 22Ω ±5%) [R498,R544,R546,R576,R577] 抵抗
	VRS-CZ1JD220J	AA	DD		C	Resistor(1/16W 22Ω ±5%) [R578,R579,R580,R581,R582] 抵抗
	VRS-CZ1JD220J	AA	DD		C	Resistor(1/16W 22Ω ±5%) [R583,R584,R585,R586,R587] 抵抗
	VRS-CZ1JD220J	AA	DD		C	Resistor(1/16W 22Ω ±5%) [R588,R589,R590,R591,R592] 抵抗
76	VRS-CZ1JD330J	AA	DD		C	Resistor(1/16W 33Ω ±5%) [R89,R91,R92,R95,R96] 抵抗
	VRS-CZ1JD330J	AA	DD		C	Resistor(1/16W 33Ω ±5%) [R97,R98,R104,R110,R111] 抵抗
	VRS-CZ1JD330J	AA	DD		C	Resistor(1/16W 33Ω ±5%) [R125,R136,R137,R138,R140] 抵抗
	VRS-CZ1JD330J	AA	DD		C	Resistor(1/16W 33Ω ±5%) [R202,R205,R419,R425,R536] 抵抗
	VRS-CZ1JD330J	AA	DD		C	Resistor(1/16W 33Ω ±5%) [R624,R625,R626,R628,R629] 抵抗
	VRS-CZ1JD330J	AA	DD		C	Resistor(1/16W 33Ω ±5%) [R630,R631,R632,R633] 抵抗
77	VRS-CZ1JD332J	AA	DD		C	Resistor(1/16W 3.3KΩ ±5%) [R547] 抵抗
78	VRS-CZ1JD470J	AA	DD		C	Resistor(1/16W 47Ω ±5%) [R472,R473,R483,R487,R488] 抵抗
	VRS-CZ1JD470J	AA	DD		C	Resistor(1/16W 47Ω ±5%) [R500,R510,R538,R627] 抵抗
79	VRS-CZ1JD823J	AA	DD		C	Resistor(1/16W 82KΩ ±5%)(MCR01MZSJ823) [R466] 抵抗
80	VSDTC114EK/-1	AB	DD		B	Transistor(DTC114EK) [Q5] ﾄﾗﾝｼﾞｽﾀｰ
81	VSDTC114YK/-1	AC	ZZ		B	Transistor(DTC114YK) [Q1,Q3,Q4,Q13] ﾄﾗﾝｼﾞｽﾀｰ
82	XBBSD30P06000	AA	DD		C	Screw(3×6) [IC12] ﾋﾞｽ
	(Unit)					
901	CPWBN1518DS55	EB	**		E	PRTC PWB PRTC 基板

■ 索引 (Index)

PARTS CODE	JAPAN ONLY ORDER CODE	NO.	PRICE R.		NEW	P/R
			Ex.	Ja.		
【C】						
CARMM0286FC01	572 240 0472	21- 18	AG	DX	N	C
CARMP0147DS51	572 240 0445	3- 14	BA	FX		E
CBDGD0043FC01	572 150 0033	1- 20	AQ	EQ	N	C
CBDGD0043FC02	572 150 0034	1- 20	AP	EQ	N	C
CBDGD0043FC03	572 150 0035	1- 20	AQ	EQ	N	C
CBDGD0043FC04	572 150 0031	1- 20	AR	EQ	N	C
CBDGD0043FC05	572 150 0032	1- 20	AQ	EQ	N	C
CBTN-0252FC01	572 170 0507	4- 12	AP	EQ		D
CBTN-0253FC01	572 170 0508	4- 11	AN	EG		D
CBTN-0256FC02	572 170 0511	4- 23	AR	EQ	N	D
CBTN-0256FC03	572 170 0512	4- 24	AN	EG	N	D
CBTN-0260FC01	572 170 0513	4- 20	AE	DX	N	D
CBTN-0261FC01	572 170 0514	4- 21	AK	DJ	N	D
CCADZ1518FC01	572 913 0954	36- 10	AB	DJ		D
CCADZ1561FC01	572 913 0986	36- 10	AK	DX		D
CCASP0173FC15	572 108 1287	10-901	BG	GT		E
CCASP0173FC16	572 108 1288	10-901	BG	GT		E
CCASP0173FC17	572 108 1284	10-901	BF	GN		E
CCASZ0298DS52	572 108 1316	20-501	BK	HG	N	A
CCASZ0302DS51	572 108 1312	22- 4	BB	GD	N	A
CCOVH0212FC34	572 110 1296	5-901	BN	HV	N	D
CDAiU0577FC31	572 210 1041	31- 40	BE	GN		E
CDAiU0618FC02	572 210 1218	6- 25	BN	HV	N	C
〃	572 210 1218	7- 24	BN	HV	N	C
CDAiU0619DS53	572 210 1217	7- 6	BR	LX	N	E
〃	572 210 1217	8-901	BR	LX	N	E
CDSKA0002QS33	578 966 0079	36- 10	AP	EQ	N	D
CDSKA0002TS33		36- 10	＊	＊	N	D
CDSKA0014FC31		36- 10	AT	EZ	N	D
CDSKA0014FC32		36- 10	AT	EZ	N	D
CDSKA0014FC35		36- 10	AT	EZ	N	D
CDSKA0014GH35		36- 10	＊	＊	N	D
CFiX-0571FC01	572 211 0755	2- 2	AY	FQ	N	D
CFiX-0571FC02	572 211 0782	2- 2	AN	EQ	N	D
CFiX-0571FC03	572 211 0783	2- 2	AN	EQ	N	D
CFRM-1061DS71	572 213 2223	23- 12	AV	FG	N	E
CFRM-1063DS51	572 213 2224	12-901	BF	GN	N	E
CFRM-1063FC01	572 213 2230	12- 1	AU	EZ	N	C
CFRM-1066FC01	572 213 2231	21- 21	AQ	EQ	N	C
CFRM-1066FC02	572 213 2232	21- 6	AK	EB	N	C
CFRM-1070FC01	572 213 2233	24- 32	AP	EQ	N	C
CFRM-1071FC01	572 213 2234	25- 23	AL	EB	N	C
CFRM-1072FC01	572 213 2235	25- 25	AL	EB	N	C
CFRM-1075FC01	572 213 2236	15- 12	AN	EG	N	C
CFRM-1076DS51	572 213 2225	18-901	BD	GN	N	C
CFRM-1081DS51	572 213 2226	11-901	BK	HG	N	E
CFRM-1081FC01	572 213 2237	11- 23	AU	FG	N	C
CFRM-1083DS51	572 213 2249	22-901	BK	HC	N	E
CFRM-1083DS52	572 213 2227	22-901	BH	HC	N	E
CFRM-1083DS72	572 213 2248	22- 10	AQ	EQ	N	E
CFRM-1084DS51	572 213 2228	22- 2	AR	EQ	N	E
CGiDM1977DS51	572 345 3902	16-901	BA	FX	N	E
CGiDM1977DS52	572 345 3938	16-901	BC	GJ	N	E
CGiDM1977DS53	572 345 3986	16-901	BE	GN	N	E
CGLSP0104DS51	572 348 0157	2- 13	AT	EZ	N	E
CHLDZ1446FC32	572 214 2328	7- 2	BH	HC	N	E
CPAKA6340FC01	572 902 1717	36- 5	AW	FG	N	D
CPLTM5788FCE4	572 221 8193	37-501	BS	MW	N	E
CPLTM5974FC01	572 221 8202	29- 16	AH	DX	N	C
CPLTM5975FC01	572 221 8203	29- 17	AL	EB	N	C
CPLTM5983FC01	572 221 8134	12- 6	AL	EB	N	C
CPLTM5995DS51	572 221 8125	6- 1	CA	TV	N	E
CPLTM5997FC01	572 221 8135	25- 17	AL	EB	N	C
CPLTM5999FC01	572 221 8136	26- 1	AL	EB	N	C
CPLTM6000FC01	572 221 8137	26- 8	AK	EB	N	C
CPLTM6011FC02	572 221 8138	20- 39	AS	EQ	N	C
CPLTM6017FC01	572 221 8139	28- 3	AG	DX	N	C
CPLTM6024DS51	572 221 8126	31- 15	AU	EZ	N	E
CPLTM6071FC01	572 221 8140	14- 13	AK	DX	N	C
CPLTM6109DS51	572 221 8194	24- 52	AP	EQ		E
CPNLC0248FC01	572 158 0779	4- 16	AU	FG	N	D
CPNLC0248FC02	572 158 0782	4- 16	AV	FG	N	D
CPNLC0248FC03	572 158 0780	4- 16	AU	GN	N	D
CPWBF0083RS51	578 684 0931	18- 18	AU	EZ		E
CPWBF0106RS51	572 684 4048	13- 15	AP	EQ		E
CPWBF1453FCE1	572 684 3826	3- 7	AX	FG		E
CPWBF1454FCE1	572 684 3827	7- 29	BN	LE		E
CPWBF1523FC32	572 684 4034	8- 14	BF	GN	N	E
CPWBF1525FCE1	572 684 4035	4- 3	BD	GJ	N	E
〃	572 684 4035	54-901	BD	GJ	N	E
CPWBF1526DS51	572 684 4016	23- 27	AP	EQ	N	C
CPWBF1529DS51	572 684 4017	20- 4	AR	EQ	N	E
CPWBF1546FCE1	572 684 4036	31- 6	BB	GD	N	E
CPWBF1546FCE2	572 684 4078	31- 6	BA	FX	N	E
CPWBF1546FCE4	572 684 4079	31- 6	BA	FX	N	E
CPWBF1561DS51		31- 58	AZ	FQ	N	E
CPWBN1472FCE4	572 684 4049	37- 36	CG	UM	N	E
〃	572 684 4049	49-901	CG	UM	N	E
CPWBN1491FCE1	572 684 3845	37- 34	CA	TV		E
〃	572 684 3845	50-901	CA	TV		E
CPWBN1518DS55	572 684 4042	38- 16	EB	ZZ	N	E
〃	572 684 4042	58-901	EB	ZZ	N	E
CPWBN1519DS52	572 684 4039	52-901	CX	＊＊	N	E
〃	572 684 4039	6- 22	CX	＊＊	N	E
CPWBN1521DS51	572 684 4043	38- 12	BM	HR	N	E
CPWBN1534DS52	572 684 4044	38- 9	BP	LP	N	E
CPWBN1544DS51	572 684 4040	31- 28	BR	LX	N	E
〃	572 684 4040	51-901	BR	LX	N	E
CPWBN1545FCE1	572 684 4037	31- 8	BQ	LP	N	E
〃	572 684 4037	55-901	BQ	LP	N	E
CPWBN1549DS54	572 684 4041	34- 1	CU	VW	N	E
〃	572 684 4041	53-901	CU	VW	N	E
CPWBN1549DS55	572 684 4045	34- 1	CV	VZ	N	E
〃	572 684 4045	53-901	CV	VZ	N	E
CPWBN1549DS57	572 684 4059	34- 1	CU	VW	N	E
〃	572 684 4059	53-901	CU	VW	N	E
CPWBN1560FCE1	572 684 4038	4- 5	BM	HR	N	E
〃	572 684 4038	56-901	BM	HR	N	E
CROLM1390FC01	572 287 2390	19- 17	AW	FG	N	B
CROLM1404DS51	572 287 2374	19- 32	BB	GD	N	E
CSFTZ2553FC01	572 290 2487	10- 29	AN	EG		C
CSFTZ2686DS51	572 290 2894	23- 21	AV	FG	N	E
CSFTZ2694FC31	572 290 2900	7- 17	BA	FX	N	E
CSFTZ2698DS51	572 290 2895	14- 32	AQ	EQ	N	E
CSFTZ2702DS51	572 290 2896	15- 33	AP	EQ	N	E
CSFTZ2706DS51	572 290 2897	17- 41	AP	EQ	N	C
CSFTZ2716DS51	572 290 2898	22- 16	AP	EQ	N	C
CSTYM0294FC01	572 231 0594	27- 9	AS	EQ	N	C
CTHM-0011FC01	578 644 0001	24- 27	AK	EB		B
【D】						
DHAi-3193FC11	572 542 2266	4- 27	AC	DJ	N	C
DHAi-3204FC11	572 542 2267	37- 26	AM	EG	N	C
DHAi-3206FC11	572 542 2269	37- 39	AG	DX	N	C
DHAi-3207FC11	572 542 2270	37- 25	AG	DX	N	C
DHAi-3332DS11	572 542 2026	36- 11	BB	GD	N	B
DHAi-3332DSZZ	572 542 2025	36- 11	BB	GD	N	B
DHAi-3339FC11	572 542 2326	11- 2	AV	FG	N	C
DHAi-3341FCZZ	572 542 2272	17- 4	AH	DX	N	C
DHAi-3342FCZZ	572 542 2273	18- 13	AE	DS	N	C
DHAi-3344FCZZ	572 542 2274	21- 26	AF	DS	N	C
DHAi-3345FC11	572 542 2275	35- 6	AY	FQ	N	C
DHAi-3348FCZZ	572 542 2276	35- 14	AR	EQ	N	C
DHAi-3349FCZZ	572 542 2277	23- 2	AD	DJ	N	C
DHAi-3350FC11	572 542 2327	20- 26	AV	FG	N	C
DHAi-3351FCZZ	572 542 2279	23- 1	AD	DJ	N	C
DHAi-3353FCZZ	572 542 2280	24- 13	AY	FQ	N	C
DHAi-3354FC11	572 542 2328	25- 41	AH	DX	N	C
DHAi-3359FC11	572 542 2329	13- 9	AQ	EQ	N	C
DHAi-3360FCZZ	572 542 2283	35- 13	AU	EZ	N	C
DHAi-3361FCZZ	572 542 2284	35- 7	AT	EZ	N	C
DHAi-3362FCZZ	572 542 2285	31- 17	AY	FQ	N	C
DHAi-3363FCZZ	572 542 2286	35- 16	AT	EZ	N	C
DHAi-3364FCZZ	572 542 2287	33- 6	AX	FG	N	C
DHAi-3365FCZZ	572 542 2288	23- 4	AH	DX	N	C
DHAi-3367FCZZ	572 542 2289	32- 17	AT	EZ	N	C
DHAi-3369FCZZ	572 542 2290	6- 3	AN	EG	N	C
DHAi-3399FCZZ	572 542 2291	24- 13	AY	FQ	N	C
DHAi-3400FCZZ	572 542 2324	35- 7	AU	EZ	N	C
DHAi-3402FC11		33- 6	AY	FQ	N	C
DHAi-3404FCZZ	572 542 2294	35- 10	AR	EQ	N	C
DHAi-3405FCZZ	572 542 2295	35- 11	AG	DX	N	C
DHAi-3410FCZZ	572 542 2298	35- 12	AL	EB	N	C
DHAi-3412FCZZ	572 542 2300	31- 27	AC	DJ	N	C
DHAi-3413FCZZ	572 542 2301	35- 5	AN	EG	N	C
DHAi-3414FC11	572 542 2331	20- 3	AL	EB	N	C
DHAi-3416FCZZ	572 542 2303	35- 9	AN	EQ	N	C
DHAi-3419FCZZ	572 542 2304	35- 2	AE	DS	N	C
〃	572 542 2304	4- 29	AE	DS	N	C
DHAi-3424FC12	572 542 2417	35- 1	AV	FG	N	C

PARTS CODE	JAPAN ONLY ORDER CODE	NO.	PRICE R.		NEW	P/R
			Ex.	Ja.		
DHAi-3426FCZZ	572 542 2306	31- 52	AQ	EG	N	C
〃	572 542 2306	35- 20	AQ	EG	N	C
DHAi-3441FCZZ	572 542 2307	37- 5	AV	FG	N	C
DHAi-3443FC12	572 542 2325	35- 8	AY	FQ	N	C
DHAi-3453FCZZ		38- 8	AV	FG	N	C
DHAi-3454FCZZ		38- 7	AK	DX	N	C
DHAi-3465FCZZ	572 542 2309	34- 21	AV	FG	N	C
DUNT-7136FCA1	572 685 2220	37- 31	AN	EQ	N	E
DUNT-7187DS11	572 685 2242	13-901	BW	RJ	N	E
〃	572 685 2242	14-901	BW	RJ	N	E
〃	572 685 2242	15-901	BW	RJ	N	E
DUNT-7187DSZZ	572 685 2181	13-901	BV	RB	N	E
〃	572 685 2181	14-901	BV	RB	N	E
〃	572 685 2181	15-901	BV	RB	N	E
DUNT-7188DS11		19-901	CE	UF	N	A
〃		20-901	CE	UF	N	A
DUNT-7188DS12		19-901	CE	UF	N	A
〃		20-901	CE	UF	N	A
DUNT-7193DSZZ	572 685 2183	28-901	BG	GX	N	E
DUNT-7248DSZZ	572 685 2184	6-901	CM	UW	N	E
〃	572 685 2184	7-901	CM	UW	N	E
DUNT-7251DSZZ	572 685 2185	23-901	BZ	TF	N	E
DUNT-7255DSZZ	572 685 2186	36- 9	AZ	FQ	N	E
DUNT-7269FCZZ	572 685 2227	38- 5	CD	UD		E
DUNT-7272DSZZ	572 685 2187	30- 28	CU	VZ	N	E
DUNT-7289DSZZ	572 685 2222	31- 24	AK	DX	N	E
DUNTW7189DS11	572 685 2223	24-901	CG	UM	N	E
〃	572 685 2223	25-901	CG	UM	N	E
DUNTW7189DS12	572 685 2234	24-901	CG	UM	N	E
〃	572 685 2234	25-901	CG	UM	N	E
DUNTW7189DSZZ	572 685 2188	24-901	CG	UM	N	E
〃	572 685 2188	25-901	CG	UM	N	E
【G】						
GCAB-0946FCZ2	572 107 2065	37- 27	AZ	FQ		D
GCAB-0947FCZZ	572 107 2053	37- 2	AT	EZ		D
GCAB-0980FCZ5	572 107 2138	1- 18	BA	FX	N	D
GCAB-0981FCZ5	572 107 2139	27- 28	AZ	FX	N	D
GCAB-0981FCZZ	572 107 2179	27- 28	BB	GD	N	D
GCAB-0982FCZ5	572 107 2140	2- 19	AU	FG	N	D
GCAB-0982FCZZ	572 107 2168	2- 19	AS	EQ	N	D
GCAB-0983FCZ5	572 107 2141	16- 11	AQ	EQ	N	C
GCAB-0983FCZZ	572 107 2169	16- 11	AS	EQ	N	C
GCAB-0984FCZ5	572 107 2142	1- 21	BM	HR	N	D
GCAB-0984FCZZ	572 107 2170	1- 21	BA	FX	N	D
GCAB-0985FCZ5	572 107 2143	1- 19	AP	EQ	N	D
GCAB-0985FCZZ	572 107 2171	1- 19	AQ	EQ	N	D
GCAB-0987FCZ5	572 107 2144	1- 6	AV	FG	N	D
GCAB-0987FCZZ	572 107 2180	1- 6	AU	EZ	N	D
GCAB-0988FCZ5	572 107 2145	1- 3	BC	GJ	N	D
GCAB-0988FCZZ	572 107 2172	1- 3	BE	GN	N	D
GCAB-0989FCZ5	572 107 2146	1- 16	AT	EZ	N	D
GCAB-0989FCZZ	572 107 2181	1- 16	AR	EQ	N	D
GCAB-0990FCZ5	572 107 2147	1- 15	AM	EG	N	D
GCAB-0990FCZZ	572 107 2182	1- 15	AP	EQ	N	D
GCAB-0991FCZ5	572 107 2148	1- 13	AS	EQ	N	D
GCAB-0991FCZZ	572 107 2183	1- 13	AR	EQ	N	D
GCAB-0992FCZ5	572 107 2149	1- 10	AT	EZ	N	D
GCAB-0992FCZZ	572 107 2184	1- 10	AV	FG	N	D
GCAB-0993FCZZ	572 107 2150	1- 8	BA	FX	N	D
GCAB-0994FCZ5	572 107 2151	2- 5	BA	FX	N	D
GCAB-0994FCZZ	572 107 2173	2- 5	AR	EQ	N	D
GCAB-0995FCZ5	572 107 2152	2- 1	AQ	EQ	N	D
GCAB-0995FCZZ	572 107 2185	2- 1	AR	EQ	N	D
GCAB-0996FCZ5	572 107 2153	2- 6	AW	FG	N	D
〃	572 107 2153	3- 12	AW	FG	N	D
GCAB-0996FCZZ	572 107 2186	2- 6	AW	FG	N	D
〃	572 107 2186	3- 12	AW	FG	N	D
GCAB-0997FCZ5	572 107 2154	2- 7	AP	EQ	N	D
GCAB-0997FCZZ	572 107 2187	2- 7	AQ	EQ	N	D
GCAB-0998FCZ5	572 107 2155	2- 3	AP	EQ	N	D
GCAB-0998FCZZ	572 107 2174	2- 3	AG	DX	N	D
GCAB-0999FCZ5	572 107 2156	2- 9	AG	DX	N	D
GCAB-0999FCZZ	572 107 2175	2- 9	AH	DX	N	D
GCAB-1018FCZ5	572 107 2157	1- 1	BF	FG	N	D
GCAB-1018FCZZ	572 107 2176	1- 1	AY	FQ	N	D
GCAB-1019FCZ5	572 107 2158	2- 15	AV	FQ	N	D
GCAB-1019FCZZ	572 107 2188	2- 15	AU	EZ	N	D
GCAB-1020FCZ5	572 107 2159	2- 17	AL	DX	N	D
GCAB-1020FCZZ	572 107 2189	2- 17	AH	DX	N	D
GCAB-1022FCZ5	572 107 2160	2- 16	AQ	EZ	N	D
GCAB-1022FCZZ	572 107 2190	2- 16	AU	EZ	N	D

PARTS CODE	JAPAN ONLY ORDER CODE	NO.	PRICE R.		NEW	P/R
			Ex.	Ja.		
GCAB-1023FCZ5	572 107 2161	2- 11	BC	EQ	N	D
GCAB-1023FCZZ	572 107 2177	2- 11	AT	EZ	N	D
GCAB-1024FCZ5	572 107 2162	2- 20	AU	FQ	N	D
GCAB-1024FCZZ	572 107 2191	2- 20	AX	FG	N	D
GCAB-1025FCZ5	572 107 2163	2- 18	AZ	EQ	N	D
GCAB-1025FCZZ	572 107 2178	2- 18	AR	EQ	N	D
GCASP0173FCZ2	572 108 1303	10- 39	BA	FX		C
GCŌVH0211FCZ2	572 110 1305	5- 11	BB	GD	N	D
GCŌVH0212FCZ2	572 110 1306	5- 5	BB	GD	N	D
GCŌVZ0237FCZZ	572 110 1309	36-106	AZ	FQ	N	D
GLEGG0075FCZZ	572 123 0106	30- 14	AE	DJ		C
【H】						
HPNLC0247FCZ5	572 158 0781	4- 13	BD	GN	N	C
HPNLC0247FCZZ	572 158 0783	4- 13	AV	FG	N	C
HPNLH0249FCZZ	572 158 0758	4- 10	BF	GN		C
【J】						
JHNDM0163FCZ1	572 172 0223	29- 2	AG	DX	N	C
JHNDP0164FCZ3	572 172 0220	10- 1	BL	HL	N	D
JHNDP0167FCZ2	572 172 0224	22- 24	AC	DJ	N	C
JKNBZ0143FCZZ	572 174 0376	25- 6	AD	DJ	N	C
JKNBZ0144FCZZ	572 174 0377	27- 10	AE	DS	N	C
【L】						
LANGF1421FCZZ	572 200 1463	29- 7	AF	DS	N	C
LANGF1422FCZZ	572 200 1464	29- 6	AG	DS	N	C
LANGF1423FCZZ	572 200 1465	6- 19	AH	DX	N	C
LANGT1411FCZZ	572 200 1466	23- 11	AD	DJ	N	C
LBNDJ0002FCZZ	572 201 0032	6- 33	AA	DD		C
LBNDJ0016FCZZ	572 201 0010	38- 11	AA	DD		C
LBNDJ0043FCZ1	572 201 0125	12- 25	AA	DJ		C
〃	572 201 0125	35- 19	AA	DJ		C
〃	572 201 0125	7- 23	AA	DJ		C
LBNDZ0069FCZZ	572 201 0158	1- 23	AD	DJ		C
LBŌSZ2114FCZZ	572 202 0455	30- 16	AK	EB	N	C
LBSHC0355FCZZ	572 204 0502	6- 9	AF	DS	N	C
LBSHC0356FCZZ	572 204 0503	7- 11	AC	DJ	N	C
LBSHZ1001ACZZ	596 204 0015	37- 12	AB	DD		C
LBSHZ1102CCZZ	596 204 0010	3- 9	AC	DD		C
LBSHZ2050SCZZ	595 204 0016	37- 16	AB	DD		C
LDAiU0576FCZZ	572 210 1046	10- 25	AG	DX		C
LDAiU0610FCZZ	572 210 1124	7- 9	AE	DS		C
LDAiU0619FCZ1	572 210 1199	8- 5	AS	EQ		C
LDAiU0639FCZZ	572 210 1219	32- 8	AE	DS	N	C
LDAiU0643FCZZ	572 210 1220	31- 2	AH	DX	N	C
LDAiU0646FCZ5	572 210 1221	4- 1	BF	GN	N	C
LDAiU0646FCZZ	572 210 1229	4- 1	AX	FG	N	C
LDAiU0656FCZZ	572 210 1222	20- 43	AF	DS	N	C
LFiX-0524FCZZ	572 211 0716	17- 27	AC	DJ		C
LFiX-0537FCZZ	572 211 0713	7- 10	AD	DJ		C
LFiX-0545FCZZ	572 211 0738	8- 16	AC	DJ		C
LFiX-0560FCZZ	572 211 0739	37- 23	AF	DS		C
LFiX-0567FCZZ	572 211 0740	37- 4	AD	DJ		C
LFiX-0572FCZ5	572 211 0756	2- 4	AS	EQ	N	D
LFiX-0572FCZZ	572 211 0759	2- 4	AK	DX	N	D
LFRM-1062FCZZ	572 213 2238	23- 5	AP	EQ	N	C
LFRM-1064FCZ1	572 213 2269	19- 10	AS	EZ	N	C
LFRM-1069FCZZ	572 213 2240	24- 21	AL	EB	N	C
LFRM-1073FCZ1	572 213 2257	27- 22	AS	EG	N	C
LFRM-1074FCZZ	572 213 2242	27- 23	AS	EQ	N	C
LFRM-1076FCZZ	572 213 2243	18- 16	AN	EG	N	C
LFRM-1079FCZZ	572 213 2244	27- 13	AF	DS	N	C
LFRM-1080FCZZ	572 213 2245	27- 14	AH	DX	N	C
LHLDR1511FCZ1	572 214 2329	24- 8	BA	FX	N	C
LHLDW0429FCZZ	572 214 0398	34- 16	AB	DD		C
LHLDW0595FCZZ	572 214 0467	9- 13	AC	DD		C
LHLDW1006FCZZ	578 214 0007	34- 15	AA	DD		C
LHLDW1061FCZZ	572 214 0597	23- 30	AB	DD		C
LHLDW1151FCZZ	572 214 1300	31- 22	AB	DJ		C
LHLDW1152FCZZ	572 214 1345	30- 4	AC	DJ		C
〃	572 214 1345	31- 23	AC	DJ		C
LHLDW1154FCZZ	572 214 1321	31- 34	AC	DJ		C
LHLDW1155FCZZ	572 214 1336	23- 8	AC	DJ		C
LHLDW1223FCZZ	572 214 1441	35- 17	AA	DJ		C
LHLDW1226FCZZ	572 214 1450	10- 40	AB	DJ		C
〃	572 214 1450	36- 25	AB	DJ		C
LHLDW1499FCZZ	572 214 2204	37- 19	AC	DJ		C
LHLDW1545FCZZ	572 214 2326	35- 18	AB	DJ	N	C
LHLDW2087SCZZ	595 214 0101	37- 41	AA	DD	N	C
LHLDW5031BCZZ	588 214 0029	6- 34	AA	DD		C
LHLDZ1085FCZ2	572 214 2205	3- 8	AD	DJ		C
LHLDZ1377FCZZ	572 214 1795	10- 36	AD	DJ		C
LHLDZ1381FCZZ	572 214 1799	7- 31	AL	EB		C

PARTS CODE	JAPAN ONLY ORDER CODE	NO.	PRICE R.		NEW	P/R
			Ex.	Ja.		
LHLDZ1399FCZZ	572 214 1949	25- 30	AC	DJ		C
LHLDZ1458FCZZ	572 214 2206	4- 9	AF	DS		C
LHLDZ1459FCZZ	572 214 2207	4- 6	AE	DS		C
LHLDZ1493FCZZ	572 214 2211	37- 6	AF	DS		C
LHLDZ1494FCZZ	572 214 2212	37- 3	AF	DS		C
LHLDZ1505FCZZ	572 214 2213	7- 4	AC	DJ		C
LHLDZ1508FCZZ	572 214 2330	33- 1	AW	FG	N	C
LHLDZ1509FCZZ	572 214 2331	19- 26	AF	DS	N	C
LHLDZ1512FCZZ	572 214 2332	24- 36	AR	EQ	N	C
LHLDZ1513FCZZ	572 214 2333	24- 22	AD	DJ	N	C
LHLDZ1514FCZZ	572 214 2334	16- 16	AK	DX	N	C
LHLDZ1517FCZZ	572 214 2335	11- 27	AE	DS	N	C
LHLDZ1519FCZZ	572 214 2336	20- 33	AW	FG	N	C
LHLDZ1520FCZZ	572 214 2337	15- 30	AC	DJ	N	C
LHLDZ1521FCZZ	572 214 2338	13- 20	AE	DJ	N	C
LHLDZ1523FCZZ	572 214 2339	13- 27	AH	DX	N	C
LHLDZ1524FCZZ	572 214 2340	13- 1	AK	DX	N	C
LHLDZ1525FCZZ	572 214 2341	31- 4	AG	DJ	N	C
LHLDZ1539FCZZ	572 214 2343	19- 29	AD	DJ	N	C
LHLDZ1546FCZZ	572 214 2327	29- 22	AC	DJ	N	C
LHLDZ1547FCZZ	572 214 2344	1- 30	AD	DJ	N	C
〃	572 214 2344	38- 26	AD	DJ	N	C
LPiN-0277FCZZ	572 218 0350	1- 26	AB	DJ		C
LPiNS0014QSBZ	572 218 0635	4- 18	AF	DS	N	C
LPiNS0014QSCZ	572 218 0636	4- 17	AF	DS	N	C
LPiNS0096FCZZ	572 218 0079	17- 12	AB	DD		C
〃	572 218 0079	18- 7	AB	DD		C
〃	572 218 0079	21- 5	AB	DD		C
〃	572 218 0079	23- 19	AB	DD		C
〃	572 218 0079	27- 32	AB	DD		C
LPiNS0133FCZZ	572 218 0086	12- 4	AA	DD		C
〃	572 218 0086	15- 15	AA	DD		C
〃	572 218 0086	25- 4	AA	DD		C
LPiNS0155FCZZ	572 218 0052	15- 6	AA	DD		C
〃	572 218 0052	16- 35	AA	DD		C
〃	572 218 0052	17- 13	AA	DD		C
LPiNS0165FCZZ	572 218 0087	28- 28	AB	DD		C
LPiNS0258FCZZ	572 218 0329	28- 21	AA	DD		C
LPiNS0280FCZZ	572 218 0367	5- 9	AD	DJ		C
LPiNS0320FCZZ	572 218 0546	27- 35	AB	DJ		C
LPiNS0327FCZZ	572 218 0605	27- 34	AC	DJ		C
LPiNS7062SCZZ	577 218 0001	10- 9	AA	DD		C
LPLTM2573FCZ1	572 221 2384	4- 14	AD	DJ		C
LPLTM5027FCZZ	572 221 5629	1- 22	AC	DJ		C
LPLTM5414FCZ1	572 221 7959	10- 6	AR	EQ		C
LPLTM5416FCZZ	572 221 6712	10- 34	AH	DX		C
LPLTM5714FCZZ	572 221 7735	19- 38	AB	DJ		C
〃	572 221 7735	22- 7	AB	DJ		C
LPLTM5787FCZZ	572 221 7890	37- 35	AQ	EQ		C
LPLTM5788FCZZ	572 221 7891	37- 14	AP	EQ		C
LPLTM5789FCZZ	572 221 7892	37- 30	AF	DS		C
LPLTM5892FCZZ	572 221 7898	37- 22	AD	DJ		C
LPLTM5973FCZZ	572 221 8141	33- 16	AQ	EQ	N	C
LPLTM5976FCZZ	572 221 8144	32- 14	AL	EB	N	C
LPLTM5977FCZZ	572 221 8206	38- 17	AS	EQ	N	C
LPLTM5979FCZZ	572 221 8145	31- 33	AV	FG	N	C
LPLTM5980FCZZ	572 221 8146	31- 21	AK	EB	N	C
LPLTM5981FCZZ	572 221 8147	31- 29	AK	DX	N	C
LPLTM5986FCZZ	572 221 8148	19- 14	AD	DJ	N	C
LPLTM5987FCZZ	572 221 8149	20- 9	AG	DX	N	C
LPLTM5989FCZZ	572 221 8150	6- 13	AQ	EQ	N	C
LPLTM5991FCZZ	572 221 8151	6- 23	AW	FG	N	C
LPLTM5992FCZZ	572 221 8152	7- 22	AK	DX	N	C
LPLTM5996FCZ1	572 221 8153	24- 26	AN	EG	N	C
LPLTM6003FCZZ	572 221 8154	23- 24	AD	DJ	N	C
LPLTM6016FCZZ	572 221 8155	28- 12	AC	DJ	N	C
LPLTM6025FCZZ	572 221 8156	34- 3	AE	DS	N	C
LPLTM6027FCZZ	572 221 8157	31- 7	AH	DX	N	C
LPLTM6028FCZZ		38- 6	AL	EB	N	C
LPLTM6073FCZZ	572 221 8158	28- 32	AC	DJ	N	C
LPLTM6075FCZ1	572 221 8159	37- 28	AS	EQ	N	C
LPLTM6079FCZZ	572 221 8160	31- 20	AD	DJ	N	C
LPLTM6082FCZZ	572 221 8161	9- 10	AT	EZ	N	C
LPLTM6083FCZZ	572 221 8162	9- 7	AV	FG	N	C
LPLTM6084FCZZ	572 221 8163	9- 2	AK	EB	N	C
LPLTM6085FCZZ	572 221 8164	9- 9	AN	EG	N	C
LPLTM6086FCZZ	572 221 8165	9- 12	AK	DX	N	C
LPLTM6087FCZZ	572 221 8166	9- 3	AN	EG	N	C
LPLTM6089FCZZ	572 221 8167	30- 10	AK	DX	N	C
LPLTM6090FCZZ	572 221 8168	34- 13	AE	DJ	N	C
LPLTM6092FCZ1	572 221 8169	1- 9	AM	EG	N	C

PARTS CODE	JAPAN ONLY ORDER CODE	NO.	PRICE R.		NEW	P/R
			Ex.	Ja.		
LPLTM6093FCZZ	572 221 8170	29- 5	AM	EG	N	C
LPLTM6095FCZZ	572 221 8171	9- 5	AC	DJ	N	C
LPLTM6096FCZZ	572 221 8172	6- 17	AF	DS	N	C
LPLTM6097FCZZ	572 221 8173	29- 8	AD	DJ	N	C
LPLTM6100FCZZ	572 221 8174	29- 4	AM	EG	N	C
LPLTM6102FCZ1	572 221 8175	31- 45	AN	EG	N	C
LPLTM6108FCZZ	572 221 8176	37- 29	AF	DS	N	C
LPLTM6109FCZZ	572 221 8195	24- 43	AD	DJ	N	C
LPLTM6112FCZZ	572 221 8196	22- 27	AH	DX	N	C
LPLTP5411FCZZ	572 221 6755	10- 13	AQ	EQ		C
LPLTP5412FCZZ	572 221 6756	10- 5	AP	EQ		C
LPLTP5413FCZZ	572 221 6757	10- 18	AF	DS		C
LPLTP5998FCZZ	572 221 8177	25- 10	BB	GD	N	C
LPLTP6019FCZZ	572 221 8178	16- 6	AD	DJ	N	C
LPLTP6020FCZZ	572 221 8179	13- 14	AF	DS	N	C
LPLTP6098FCZZ	572 221 8180	21- 3	AD	DJ	N	C
LRALM0183FCZZ	572 223 0285	7- 36	AG	DX		C
LRALM0184FCZZ	572 223 0286	7- 35	AG	DX		C
LRALM0201FCZZ	572 223 0299	6- 26	AN	EG	N	C
LRALM0202FCZZ	572 223 0300	29- 19	AN	EG	N	C
LSOU-0026QSCZ	572 226 0696	13- 4	BA	FX	N	C
LSOU-0189FCZ5	572 226 0697	13- 21	AT	EZ	N	C
LSOU-0189FCZZ	572 226 0700	13- 21	AU	EZ	N	C
LSOU-0190FCZ5	572 226 0698	13- 10	AV	FG	N	C
LSOU-0190FCZZ	572 226 0701	13- 10	AT	EZ	N	C
LSOU-0193FCZ5	572 226 0699	13- 8	AN	EQ	N	C
LSOU-0193FCZZ	572 226 0710	13- 8	AP	EQ	N	C
LSTPF0172FCZ1	572 230 0380	24- 40	AA	DJ		C
LSTPP0011QSZZ	578 230 0043	22- 21	AC	DJ		C
LSTPP0274FCZZ	572 230 0326	16- 26	AA	DD		C
〃	572 230 0326	17- 10	AA	DD		C
LSTPP0275FCZZ	572 230 0327	16- 15	AE	DS		C
LSTPP0314FCZZ	572 230 0395	10- 23	AA	DJ		C
LSTPP0366FCZZ	572 230 0537	14- 19	AD	DJ	N	C
LSTYM0261FCZZ	572 231 0527	8- 11	AB	DJ		C
LSTYM0293FCZZ	572 231 0595	21- 28	AP	EQ	N	C
LSTYM0295FCZZ	572 231 0596	15- 38	AL	EB	N	C
LSTYM0298FCZZ	572 231 0597	27- 15	AH	DX	N	C
LSTYM0301FCZZ	572 231 0598	27- 27	AF	DS	N	C
LSUPP0076FCZZ	572 233 0103	37- 20	AA	DD		C
LSUPP0118FCZZ	572 233 0143	37- 18	AB	DJ		C
LSUPP0126FCZZ	572 233 0156	31- 35	AC	DJ	N	C
〃	572 233 0156	31- 5	AC	DJ	N	C
LSUPP1001ACZZ	596 233 0001	34- 12	AB	DD		C
LX-BZ0004QSZZ	572 970 1917	7- 37	AB	DD		C
LX-BZ0036GCZZ	578 970 0190	20- 37	AC	DD		C
LX-BZ0049FCZZ	572 970 0353	7- 15	AB	DD		C
LX-BZ0071FCZZ	572 970 0435	30- 6	AA	DD		C
LX-BZ0324FCZZ	572 970 0197	7- 12	AA	DD		C
LX-BZ0531FCZZ	572 970 0220	10- 37	AA	DD		C
LX-BZ0555FCZZ	572 970 0234	36- 14	AB	DD		D
LX-BZ0736FCZZ	572 970 1499	24- 20	AB	DD		C
LX-BZ0776FCZZ	572 970 1677	2- 32	AG	DS		C
LX-BZ0833FCZZ	572 970 1816	10- 22	AC	DD		C
〃	572 970 1816	31- 47	AC	DD		C
LX-BZ0840FCZZ	572 970 1818	28- 37	AC	DD		C
LX-BZ0850FCZZ	572 970 1977	11- 7	AC	DD		C
〃	572 970 1977	33- 10	AC	DD		C
LX-BZ0855FCZZ	572 970 1980	30- 17	AC	DD		C
〃	572 970 1980	38- 19	AC	DD		C
LX-BZ0880FCZZ	572 970 1990	9- 6	AB	DD		C
LX-BZ0884FCZZ	572 970 1964	10- 8	AB	DD		C
LX-BZ0898FCZZ	572 970 2035	30- 15	AC	DD		C
LX-BZ0901FCZZ	572 970 2269	1- 32	AC	DD		C
〃	572 970 2269	38- 28	AC	DD		C
LX-BZ0916FCZZ	572 970 2273	21- 12	AA	DD		C
LX-BZ0924FCZZ	572 970 2061	25- 26	AD	DJ		C
LX-BZ0938FCZZ	572 970 2326	37- 43	AC	DD		C
LX-BZ0944FCZ1	572 970 2578	27- 11	AH	DS	N	C
LX-BZ0949FCZZ	572 970 2559	19- 13	AC	DD	N	C
LX-BZ0959FCZZ	572 970 2560	30- 9	AC	DD	N	C
LX-BZ0960FCZZ	572 970 2520	17- 22	AC	DD		C
〃	572 970 2520	30- 25	AC	DD		C
LX-BZ0962FCZ1	572 970 2566	37- 40	AF	DS	N	C
LX-BZ0963FCZZ	572 970 2579	38- 14	AF	DS	N	C
LX-BZ0965FCZZ	572 970 2581	19- 39	AE	DS	N	C
LX-BZ1022LCZZ	594 970 0327	38- 3	AB	DD		C
LX-BZ3006SC0S	541 970 5148	24- 51	AA	DD		C
〃	541 970 5148	25- 34	AA	DD		C
LX-LZ0022FCZZ	572 973 0001	31- 50	AB	DD		C
LX-NZ0088FCZZ	572 980 0102	1- 40	AC	DD		C

PARTS CODE	JAPAN ONLY ORDER CODE	NO.	PRICE R.		NEW	P/R
			Ex.	Ja.		
LX-WZ0042FCZ1	572 990 0422	27- 7	AA	DD		C
LX-WZ0326FCZZ	572 990 0386	36- 16	AA	DD		D
LX-WZ0443FCZZ	572 990 0540	24- 6	AB	DD		C
〃	572 990 0540	31- 51	AB	DD		C
〃	572 990 0540	31- 53	AB	DD		C
〃	572 990 0540	33- 11	AB	DD		C
〃	572 990 0540	37- 17	AB	DD		C
LX-WZ0445FCZ1	572 990 0549	20- 61	AC	DD	N	C
〃	572 990 0549	21- 9	AC	DD	N	C
LX-WZ0448FCZZ	572 990 0547	25- 42	AB	DD	N	C
LX-WZ2011SCZZ	595 990 0031	15- 41	AA	DD		C
〃	595 990 0031	20- 45	AA	DD		C
【M】						
MARMP0147FCZ2	572 240 0446	3- 10	AK	DX		C
MARMP0148FCZ2	572 240 0447	3- 5	AK	DX		C
MARMP0293FCZ1	572 240 0473	11- 4	AL	EB	N	C
MARMP0294FCZ1	572 240 0474	14- 31	AM	EG	N	C
MARMP0295FCZZ	572 240 0475	15- 23	AF	DS	N	C
MARMP0297FCZZ	572 240 0488	16- 23	AB	DJ	N	C
MARMP0298FCZZ	572 240 0476	27- 26	AC	DJ	N	C
MARMP0301FCZ1	572 240 0471	24- 7	AE	DJ	N	C
MCAMP0106FCZZ	572 241 0146	21- 4	AC	DJ	N	C
MHNG-0170FCZ1	572 246 0256	5- 8	AE	DS		C
MHNG-0210FCZZ	572 246 0426	5- 3	AQ	EZ		C
MHNG-0211FCZZ	572 246 0427	5- 4	AQ	EZ		C
MLEVF0845FCZ1	572 248 1469	25- 32	AE	DS	N	C
MLEVF0846FCZ1	572 248 1470	25- 28	AE	DS	N	C
MLEVP0035QSE1	572 248 1225	13- 7	AC	DJ		C
MLEVP0695FCZZ	572 248 0881	11- 26	AC	DJ		C
MLEVP0754FCZZ	572 248 1063	10- 16	AF	DS		C
MLEVP0755FCZ1	572 248 1206	10- 14	AE	DJ		C
MLEVP0781FCZZ	572 248 1309	27- 16	AD	DJ		C
MLEVP0786FCZZ	572 248 1311	25- 33	AC	DD		C
MLEVP0787FCZZ	572 248 1312	25- 36	AC	DD		C
MLEVP0840FCZZ	572 248 1471	32- 13	AD	DJ	N	C
MLEVP0841FCZZ	572 248 1472	32- 7	AG	DX	N	C
MLEVP0842FCZZ	572 248 1473	23- 16	AE	DS	N	C
MLEVP0843FCZ1	572 248 1474	20- 17	AC	DJ	N	C
MLEVP0848FCZZ	572 248 1475	25- 8	AD	DJ	N	B
MLEVP0850FCZZ	572 248 1476	28- 33	AG	DX	N	C
MLEVP0851FCZZ	572 248 1477	28- 14	AE	DS	N	C
MLEVP0852FCZZ	572 248 1478	15- 24	AG	DS	N	C
MLEVP0853FCZ1	572 248 1479	16- 7	AF	DS	N	C
MLEVP0854FCZZ	572 248 1480	17- 1	AC	DJ	N	C
MLEVP0857FCZZ	572 248 1481	18- 14	AF	DJ	N	C
MLEVP0863FCZZ	572 248 1482	27- 1	AE	EB	N	C
MLEVP0864FCZZ	572 248 1483	36- 32	AD	DJ	N	C
MLEVP0865FCZZ	572 248 1484	20- 23	AC	DS	N	C
MLEVP0871FCZZ	572 248 1486	14- 20	AD	DJ	N	C
MLEVP0875FCZZ	572 248 1487	24- 5	AF	DS	N	C
MLNKP0027FCZZ	572 251 0075	14- 12	AE	DJ	N	C
MLNKP0029FCZZ	572 251 0076	15- 27	AD	DJ	N	C
MSLi-0138FCZZ	572 256 0169	8- 10	AC	DJ		C
MSLi-0140FCZZ	572 256 0186	27- 12	BA	FX	N	C
MSPRC2114FCZZ	572 258 1969	13- 22	AB	DJ		C
MSPRC2616FCZZ	572 258 2929	16- 25	AC	DJ		C
MSPRC2631FCZZ	572 258 2943	10- 15	AC	DJ		C
MSPRC2640FCZZ	572 258 2951	10- 17	AC	DJ		C
MSPRC2642FCZ1	572 258 3297	10- 26	AB	DJ		C
MSPRC2645FCZZ	572 258 2956	33- 9	AB	DJ		C
MSPRC2654FCZ1	572 258 3067	27- 8	AB	DJ		C
MSPRC2669FCZZ	572 258 2971	10- 33	AB	DJ		C
MSPRC2731FCZ1	572 258 3490	18- 8	AC	DJ		C
MSPRC3029FCZZ	572 258 4120	32- 9	AC	DJ	N	C
MSPRC3044FCZ1	572 258 4307	19- 19	AD	DJ	N	C
MSPRC3047FCZZ	572 258 4122	19- 9	AB	DJ	N	C
MSPRC3054FCZZ	572 258 4123	25- 27	AE	DJ	N	C
MSPRC3059FCZZ	572 258 4124	24- 24	AC	DJ	N	C
MSPRC3066FCZZ	572 258 4125	15- 29	AC	DJ	N	C
MSPRC3073FCZZ	572 258 4126	11- 28	AC	DJ	N	C
MSPRC3074FCZZ	572 258 4127	11- 6	AC	DJ	N	C
MSPRC3077FCZ1	572 258 4189	21- 10	AC	DJ	N	C
MSPRC3085FCZ1	572 258 4166	17- 37	AC	DJ	N	C
MSPRC3104FCZZ	572 258 4130	18- 20	AD	DJ	N	C
MSPRC3106FCZZ	572 258 4195	20- 60	AC	DJ	N	C
MSPRC3109FCZZ	572 258 4131	19- 27	AC	DJ	N	C
MSPRC3122FCZZ	572 258 4132	15- 9	AD	DJ	N	C
MSPRC3160FCZZ	572 258 4184	24- 49	AC	DJ	N	C
MSPRC3169FCZZ	572 258 4133	11- 14	AC	DJ	N	C
MSPRD3035FCZZ	572 258 4134	32- 6	AC	DJ	N	C
MSPRD3040FCZZ	572 258 4135	23- 25	AC	DJ	N	C
MSPRD3041FCZZ	572 258 4136	23- 23	AD	DJ	N	C
MSPRD3042FCZZ	572 258 4137	23- 22	AD	DJ	N	C
MSPRD3045FCZZ	572 258 4138	19- 16	AD	DJ	N	C
MSPRD3046FCZZ	572 258 4139	19- 8	AD	DJ	N	C
MSPRD3057FCZZ	572 258 4140	25- 7	AC	DJ	N	B
MSPRD3058FCZZ	572 258 4141	25- 16	AC	DJ	N	C
MSPRD3067FCZZ	572 258 4142	17- 2	AC	DJ	N	C
MSPRD3084FCZZ	572 258 4143	11- 5	AD	DJ	N	C
MSPRD3093FCZ1	572 258 4144	16- 9	AC	DJ	N	C
MSPRD3097FCZZ	572 258 4145	18- 15	AC	DJ	N	C
MSPRD3099FCZ1	572 258 4185	15- 25	AC	DJ	N	C
MSPRD3100FCZZ	572 258 4147	14- 11	AC	DJ	N	C
MSPRD3102FCZZ	572 258 4148	27- 19	AC	DJ	N	C
MSPRD3103FCZZ	572 258 4149	27- 21	AD	DJ	N	C
MSPRD3125FCZZ	572 258 4150	31- 46	AD	DJ	N	C
MSPRD3163FCZZ	572 258 4151	27- 25	AC	DJ	N	C
MSPRP2825FCZZ	572 258 3919	8- 12	AC	DJ		C
MSPRP3009FCZZ	572 258 3922	4- 26	AD	DJ		C
MSPRP3030FCZZ	572 258 4167	32- 2	AD	DJ	N	C
MSPRP3031FCZZ	572 258 4168	32- 3	AF	DS	N	C
MSPRP3033FCZZ	572 258 4169	32- 4	AG	DX	N	C
MSPRP3034FCZZ	572 258 4170	32- 5	AG	DX	N	C
MSPRP3036FCZZ	572 258 4171	34- 18	AE	DJ	N	C
MSPRP3037FCZZ	572 258 4172	34- 11	AD	DJ	N	C
MSPRP3038FCZZ	572 258 4173	23- 9	AC	DJ	N	C
MSPRP3052FCZZ	572 258 4174	24- 12	AG	DS	N	C
MSPRP3056FCZZ	572 258 4175	24- 9	AF	DS	N	C
〃	572 258 4175	27- 4	AF	DS	N	C
MSPRP3081FCZZ	572 258 4176	28- 11	AF	DS	N	C
MSPRP3082FCZZ	572 258 4177	28- 8	AF	DS	N	C
MSPRP3105FCZZ	572 258 4178	17- 33	AC	DJ	N	C
MSPRP3164FCZZ	572 258 4179	29- 21	AD	DJ	N	C
〃	572 258 4179	34- 5	AD	DJ	N	C
MSPRP3168FCZZ		38- 2	AC	DJ	N	C
MSPRT1563FCZZ	572 258 0701	3- 3	AC	DD		C
MSPRT2414FCZZ	572 258 2452	20- 24	AC	DJ		C
〃	572 258 2452	24- 45	AC	DJ		B
〃	572 258 2452	25- 11	AC	DJ		B
MSPRT3032FCZZ	572 258 4152	32- 15	AC	DJ	N	C
MSPRT3049FCZZ	572 258 4153	20- 18	AC	DJ	N	C
MSPRT3050FCZZ	572 258 4154	21- 20	AC	DJ	N	C
MSPRT3063FCZZ	572 258 4155	26- 5	AC	DJ	N	C
MSPRT3064FCZZ	572 258 4156	28- 18	AD	DJ	N	C
MSPRT3092FCZZ	572 258 4192	16- 34	AC	DJ	N	C
MSPRT3094FCZ1	572 258 4157	16- 4	AC	DJ	N	C
〃	572 258 4157	17- 23	AC	DJ	N	C
MSPRT3098FCZZ	572 258 4158	7- 21	AC	DJ	N	C
MSPRT3110FCZ1	572 258 4180	28- 34	AC	DJ	N	C
MSPRT3121FCZ1	572 258 4306	14- 2	AC	DJ	N	C
MSPRT3165FCZZ	572 258 4162	20- 48	AC	DJ	N	C
MSPRT3190FCZZ	572 258 4186	24- 50	AF	DS	N	C
【N】						
NBLTH0239FCZZ	572 271 0408	11- 20	AF	DX		C
NBLTH0371FCZ1	572 271 0866	7- 20	AF	DS	N	B
NBLTH0373FCZZ	572 271 0854	18- 4	AF	DS	N	C
NBLTH0374FCZZ	572 271 0855	28- 25	AE	DJ	N	C
NBLTH0376FCZZ	572 271 0856	17- 29	AF	DS	N	C
NBLTT7029XCZZ	578 271 0045	14- 26	AG	DS		C
NBRGC0188FCZZ	572 272 0243	16- 28	AB	DD		C
〃	572 272 0243	17- 15	AB	DD		C
〃	572 272 0243	28- 20	AB	DD		C
NBRGC0280FCZZ	572 272 0272	14- 34	AB	DD		C
NBRGC0319FCZ1	572 272 0482	21- 13	AC	DJ		C
NBRGC0387FCZ1	572 272 0471	11- 11	AC	DJ		C
NBRGC0504FCZZ	572 272 0467	15- 7	AC	DJ		C
NBRGC0651FCZZ	572 272 0722	12- 10	AD	DJ		C
NBRGC0672FCZZ	572 272 0809	23- 6	AE	DJ	N	C
NBRGC0683FCZZ	572 272 0815	28- 10	AC	DJ	N	C
NBRGM0096FCZ1	572 272 0487	14- 9	AC	DJ		C
〃	572 272 0487	15- 18	AC	DJ		C
NBRGP0012QSZZ	578 272 0139	25- 2	AC	DJ		C
NBRGP0604FCZZ	572 272 0684	18- 2	AD	DJ		C
NBRGP0626FCZZ	572 272 0678	10- 30	AC	DJ		C
〃	572 272 0678	16- 24	AC	DJ		C
〃	572 272 0678	17- 11	AC	DJ		C
〃	572 272 0678	18- 9	AC	DJ		C
NBRGP0664FCZZ	572 272 0725	20- 25	AD	DJ		C
NBRGP0674FCZZ	572 272 0816	19- 37	AE	DJ	N	C
NBRGP0675FCZZ	572 272 0817	19- 5	AH	DX	N	B
NBRGP0676FCZ1	572 272 0891	19- 20	AC	DJ	N	C
NBRGP0677FCZZ	572 272 0819	19- 2	AC	DJ	N	B

PARTS CODE	JAPAN ONLY ORDER CODE	NO.	PRICE R.		NEW	P/R
			Ex.	Ja.		
NBRGP0678FCZZ	572 272 0820	19- 4	AF	DS	N	B
NBRGP0682FCZZ	572 272 0821	18- 6	AC	DJ	N	C
NBRGP0687FCZZ	572 272 0822	22- 28	AG	DS	N	C
NBRGP0688FCZ1	572 272 0823	22- 20	AD	DJ	N	C
NBRGY0466FCZZ	572 272 0425	7- 26	AK	EB		C
NBRGY0646FCZZ	572 272 0784	24- 38	AS	EQ		B
NBRGY0681FCZZ	572 272 0824	25- 15	AX	FG	N	B
NBRGY2122SCZZ	595 272 0047	12- 2	AB	DD		C
NCPL-0049FCBZ	572 274 0071	11- 16	AT	EZ		C
NCPL-0049FCZZ	572 274 0068	14- 29	AH	DX		C
NCPL-0056FCZZ	572 274 0077	23- 14	AF	DS	N	B
NFANP0068FCZZ	572 277 0120	33- 4	BB	GD	N	B
NFANP0070FCZZ	572 277 0121	1- 27	AZ	FX	N	B
NFANP0071FCZZ	572 277 0122	1- 29	AZ	FX	N	B
〃	572 277 0122	38- 25	AZ	FX	N	B
NFANP0072FCZZ	572 277 0123	31- 42	BA	FX	N	B
NGERH0111FCWZ	572 281 2095	12- 21	AD	DJ		C
〃	572 281 2095	16- 22	AD	DJ		C
〃	572 281 2095	17- 8	AD	DJ		C
NGERH0193FCZZ	572 281 0318	10- 10	AB	DD		C
NGERH0317FCZZ	572 281 0525	15- 5	AC	DJ		C
NGERH0484FCZZ	572 281 0654	28- 24	AB	DD		C
NGERH0780FCZ1	572 281 1074	24- 34	AE	DS		B
NGERH0866FCZZ	572 281 0955	12- 23	AC	DD		B
〃	572 281 0955	25- 5	AC	DD		C
〃	572 281 0955	28- 26	AC	DD		C
NGERH0867FCZZ	572 281 0956	12- 22	AC	DD		C
NGERH1062FCZZ	572 281 1253	24- 33	AE	DS		B
NGERH1245FCZZ	572 281 1588	17- 7	AF	DS		C
NGERH1252FCZZ	572 281 1595	12- 16	AD	DJ		C
NGERH1305FCZZ	572 281 1867	26- 6	AK	DX		B
NGERH1383FCZZ	572 281 2099	15- 17	AD	DJ		C
NGERH1496FCZZ	572 281 2321	12- 20	AE	DJ	N	C
NGERH1497FCZZ	572 281 2322	12- 14	AE	DS	N	B
NGERH1499FCZZ	572 281 2315	20- 44	AG	DX	N	B
NGERH1500FCZZ	572 281 2323	20- 21	AD	DJ	N	B
NGERH1501FCZZ	572 281 2324	21- 24	AK	EB	N	B
NGERH1502FCZZ	572 281 2325	21- 23	AD	DJ	N	C
NGERH1503FCZZ	572 281 2326	21- 19	AC	DJ	N	C
NGERH1504FCZZ	572 281 2327	21- 17	AD	DJ	N	C
NGERH1505FCZZ	572 281 2328	21- 22	AD	DJ	N	C
NGERH1507FCZZ	572 281 2316	24- 39	AT	EZ	N	B
NGERH1509FCZZ	572 281 2329	26- 9	AE	DJ	N	A
NGERH1510FCZZ	572 281 2330	12- 24	AD	DJ	N	B
NGERH1511FCZZ	572 281 2331	15- 11	AE	DJ	N	C
NGERH1525FCZZ	572 281 2332	21- 8	AD	DJ	N	C
NGERH1526FCZZ	572 281 2333	15- 8	AE	DJ	N	C
NGERH1529FCZZ	572 281 2337	22- 9	AC	DJ	N	C
NGERH1530FCZ1	572 281 2320	30- 5	AK	EB	N	C
NGERH1531FCZZ	572 281 2334	28- 5	AD	DJ	N	C
NGERH1536FCZZ	572 281 2335	15- 10	AC	DJ	N	C
NGERK1272FCZ1	572 281 1834	10- 27	AF	DS		C
NGERP1385FCZZ	578 281 0358	13- 16	AF	DS		C
NGERR1386FCZZ	572 281 2187	13- 18	AE	DJ		C
NPLYZ0005QSZZ	572 284 0700	7- 32	AG	DX		C
NPLYZ0006QSZZ	572 284 0701	7- 33	AD	DJ		C
NPLYZ0013QSZZ	578 284 0054	7- 13	AL	EB		C
NPLYZ0146FCZZ	572 284 0097	28- 27	AB	DD		C
NPLYZ0352FCZZ	572 284 0725	18- 5	AE	DJ		C
NPLYZ0365FCZZ	572 284 0788	11- 19	AC	DJ		C
NPLYZ0398FCZZ	572 284 0819	14- 25	AC	DJ		C
NPLYZ0401FCZZ	572 284 0876	7- 38	BB	GD	N	C
NPLYZ0402FCZZ	572 284 0871	28- 9	AD	DJ	N	C
NPLYZ0403FCZZ	572 284 0872	17- 30	AD	DJ	N	C
NPLYZ0404FCZZ	572 284 0873	14- 30	AE	DJ	N	C
NPLYZ0409FCZZ	572 284 0874	11- 15	AL	EB	N	C
NRŌLP0896FCZZ	572 287 1092	16- 2	AC	DD		C
〃	572 287 1092	17- 21	AC	DD		C
NRŌLP1060FCZZ	572 287 1396	14- 4	AF	DS		C
NRŌLP1403FCZZ	572 287 2391	18- 1	AR	FQ	N	C
NRŌLP1408FCZZ	572 287 2392	32- 10	AD	DJ	N	C
NRŌLP1432FCZZ	572 287 2393	28- 17	AE	DJ	N	C
NRŌLR1311FCZZ	572 287 2165	14- 28	AN	EG		B
〃	572 287 2165	15- 35	AN	EG		B
NRŌLR1391FCZZ	572 287 2368	19- 3	AY	FQ	N	A
NRŌLR1392FCZZ	572 287 2394	20- 19	BA	FX	N	A
NRŌLR1394FCZ1	572 287 2395	25- 1	AT	EZ	N	C
NRŌLR1395FCZZ	572 287 2396	24- 37	BN	HZ	N	A
NRŌLR1396FCZZ	572 287 2397	25- 14	BH	HV	N	A
NRŌLR1398FCZ1	572 287 2398	28- 22	AR	EQ	N	C
NRŌLR1399FCZ1	572 287 2399	28- 29	AR	EQ	N	C

PARTS CODE	JAPAN ONLY ORDER CODE	NO.	PRICE R.		NEW	P/R
			Ex.	Ja.		
NRŌLR1400FCZZ	572 287 2400	15- 1	AS	EZ	N	C
NRŌLR1401FCZZ	572 287 2401	17- 14	AS	EQ	N	C
NRŌLR1402FCZZ	572 287 2402	18- 10	AU	EZ	N	C
NRŌLR1406FCZZ	572 287 2408	16- 27	AM	EG	N	C
NRŌLR1411FCZZ	572 287 2403	11- 17	AK	EB	N	B
〃	572 287 2403	17- 42	AK	EB	N	B
NRŌLR1428FCZZ	572 287 2369	11- 21	AK	DX	N	B
〃	572 287 2369	14- 27	AK	DX	N	B
NRŌLR1429FCZZ	572 287 2404	17- 16	AS	EQ	N	C
NSFTZ1805FCZZ	572 290 1403	3- 1	AE	DS		C
NSFTZ2467FCZZ	572 290 2317	10- 24	AF	DS		C
NSFTZ2591FCZZ	572 290 2727	11- 18	AF	DS		C
NSFTZ2685FCZ1	572 290 2901	30- 20	AL	EB	N	C
NSFTZ2687FCZZ	572 290 2902	12- 17	AK	EB	N	C
NSFTZ2688FCZZ	572 290 2903	12- 3	AL	EB	N	C
NSFTZ2689FCZZ	572 290 2904	19- 24	AR	EQ	N	C
NSFTZ2690FCZ1	572 290 2964	19- 18	AL	EB	N	C
NSFTZ2691FCZZ	572 290 2906	21- 1	AU	EZ	N	C
NSFTZ2694FCZZ	572 290 2907	7- 16	AP	EQ	N	C
NSFTZ2697FCZZ	572 290 2908	27- 20	AN	EQ	N	C
NSFTZ2700FCZZ	572 290 2909	11- 12	AQ	EQ	N	C
NSFTZ2701FCZZ	572 290 2910	14- 24	AK	DX	N	C
NSFTZ2703FCZZ		16- 33	AF	DS	N	C
NSFTZ2704FCZZ	572 290 2911	16- 3	AL	EB	N	C
〃	572 290 2911	17- 24	AL	EB	N	C
NSFTZ2707FCZZ	572 290 2912	14- 3	AH	DX	N	C
NSFTZ2712FCZ1	572 290 2963	20- 31	AN	EG	N	C
NSFTZ2713FCZZ	572 290 2914	28- 30	AK	DX	N	C
NSFTZ2730FCZZ	572 290 2915	21- 7	AK	EB	N	C
NSFTZ2736FCZZ	572 290 2916	22- 25	AP	EQ	N	C
NSFTZ2738FCZZ	572 290 2917	37- 45	AD	DJ	N	C
【P】						
PBŌX-0131FCZZ	572 307 0477	34- 4	AU	EZ	N	C
PBRSR0218FCZ1	572 310 0367	28- 16	AH	DX	N	B
PBRSR0219FCZ1	572 310 0368	27- 30	AG	DX	N	B
PBRSR0222FCZZ	572 310 0369	19- 34	AK	DX	N	B
PBRSR0223FCZ1	572 310 0380	19- 35	AL	EB	N	B
PBRSR0224FCZZ	572 310 0371	24- 48	AH	DX	N	B
PCAPH0009YSZZ	578 312 0026	20- 16	AC	DJ		C
PCAPH0010GCZZ	578 312 0023	49-101	AD	DJ		C
〃	578 312 0023	53- 1	AD	DJ		C
〃	578 312 0023	58- 1	AD	DJ		C
PCAPH0082FCZZ	572 312 0079	29- 1	AD	DJ	N	B
PCASZ0298FCZZ	572 315 0228	20- 27	AQ	EQ	N	C
PCASZ0299FCZZ	572 315 0229	11- 1	AF	DS	N	C
PCLC-0297FCZZ	572 316 0390	12- 5	AU	FG		B
PCLC-0298FCZZ	572 316 0391	12- 13	AT	EZ		B
〃	572 316 0391	15- 19	AT	EZ		B
PCLC-0316FCZ1	572 316 0424	15- 34	AR	EQ	N	B
〃	572 316 0424	17- 43	AR	EQ	N	B
PCLC-0317FCZZ	572 316 0425	14- 10	AR	EQ	N	B
PCLC-0318FCZZ	572 316 0426	20- 22	AC	DJ	N	B
PCLC-0321FCZZ	572 316 0428	11- 8	AT	EZ	N	B
PCLR-0441FCZZ	572 318 0490	30- 24	AK	DX		C
PCLR-0442FCZZ	572 318 0491	16- 32	AD	DJ		C
PCLR-0450FCZZ	572 318 0529	17- 28	AD	DJ		C
PCLR-0474FCZZ	572 318 0593	21- 14	AC	DJ	N	C
PCLR-0475FCZZ	572 318 0594	24- 10	AA	DJ	N	C
〃	572 318 0594	27- 5	AA	DJ	N	C
PCLR-0477FCZZ	572 318 0595	26- 10	AE	DJ	N	C
PCLR-0479FCZZ	572 318 0592	28- 36	AC	DJ	N	C
PCŌVP0911FCZ2	572 323 2321	2- 30	AD	DJ	N	D
PCŌVP0941FCZ2	572 323 2322	2- 31	AD	DJ	N	D
PCŌVP1468FCZZ	572 323 1745	53- 2	AD	DJ		D
〃	572 323 1745	58- 2	AD	DJ		D
PCŌVP1509FCZZ	572 323 1968	17- 25	AH	DX		D
PCŌVP1564FCZZ	572 323 2178	37- 1	AF	DS		D
PCŌVP1618FCZ1	572 323 2324	1- 34	AH	DX	N	D
PCŌVP1623FCZ1	572 323 2325	1- 36	AH	DX	N	D
PCŌVP1631FCZZ	572 323 2326	6- 4	AP	EQ	N	C
PCŌVP1632FCZZ	572 323 2327	6- 30	AM	EG	N	C
PCŌVP1634FCZZ	572 323 2328	29- 14	AF	DS	N	C
PCŌVP1636FCZ1	572 323 2355	24- 11	AW	EZ	N	C
PCŌVP1637FCZZ	572 323 2330	24- 18	AN	EQ	N	C
PCŌVP1638FCZZ	572 323 2331	25- 35	AZ	FX	N	C
PCŌVP1639FCZ5	572 323 2332	14- 1	AR	EQ	N	C
PCŌVP1639FCZZ	572 323 2454	14- 1	AQ	EQ	N	C
PCŌVP1640FCZ1	572 323 2455	15- 22	AN	EQ	N	C
PCŌVP1640FCZ5	572 323 2333	15- 22	AL	EB	N	C
PCŌVP1641FCZZ	572 323 2334	15- 26	AG	DS	N	C
PCŌVP1642FCZ1	572 323 2335	14- 18	AL	EB	N	C

PARTS CODE	JAPAN ONLY ORDER CODE	NO.	PRICE R.		NEW	P/R
			Ex.	Ja.		
PCOVP1643FCZ1	572 323 2336	10- 3	AU	EZ	N	D
PCOVP1646FCZZ	572 323 2337	2- 10	AG	DX	N	D
PCOVP1648FCZ1	572 323 2338	20- 47	AE	DJ	N	C
PCOVP1649FCZZ	572 323 2339	20- 15	AN	EG	N	C
PCOVP1650FCZZ	572 323 2340	24- 1	AT	DX	N	C
PCOVP1652FCZZ	572 323 2341	13- 26	AN	EG	N	C
PCOVP1653FCZZ	572 323 2342	13- 3	AN	EQ	N	C
PCOVP1654FCZZ	572 323 2198	30- 8	AM	EG		C
PCOVP1656FCZZ	572 323 2343	27- 29	AG	DX	N	D
PCOVP1658FCZ1	572 323 2344	14- 17	AG	DX	N	C
PCOVP1659FCZZ	572 323 2345	30- 26	AK	DX	N	C
PCOVP1660FCZZ	572 323 2346	30- 23	AM	EG	N	C
PCOVP1697FCZZ	572 323 2347	34- 7	AG	DX	N	C
PCOVP1698FCZZ	572 323 2348	34- 10	AN	EQ	N	C
PCOVP1699FCZ1	572 323 2356	34- 2	AN	EQ	N	C
PCOVP1700FCZZ	572 323 2350	30- 30	AG	DX	N	C
PCOVP1703FCZ5	572 323 2351	1- 12	AP	EQ	N	C
PCOVP1703FCZZ	578 323 0281	1- 12	AP	EQ	N	C
PCOVP1706FCZ5	572 323 2352	1- 39	AE	DJ	N	C
PCOVP1706FCZZ	572 323 2358	1- 39	AE	DS	N	C
PCOVP1707FCZZ	572 323 2453	16- 13	AG	DX	N	D
PCUSF0334FCZZ	572 326 0296	8- 9	AP	EQ		C
PCUSS0374FCZZ	572 326 0515	6- 24	AE	DS	N	C
PCUSU0203FCZZ	572 326 0021	8- 6	AE	DS		C
PDUC-0166FCZZ	572 332 0235	33- 17	AX	EZ	N	C
PDUC-0167FCZ2	572 332 0249	32- 16	AK	EB	N	C
PDUC-0168FCZZ	572 332 0237	33- 15	AK	DX	N	C
PDUC-0169FCZ1	572 332 0234	31- 44	AE	DS	N	C
PFiLW0294FCZZ	572 337 0410	4- 22	AE	DS	N	C
PFiLZ0290FCZ1	572 337 0411	33- 2	BA	FX	N	A
PFiLZ0296FCZZ	572 337 0412	1- 38	AQ	EQ	N	A
PFTA-0134FCZ1	572 344 0114	2- 8	AE	DS	N	C
PFTA-0141FCZ5	572 344 0115	1- 7	AK	DX	N	D
PFTA-0141FCZZ	572 344 0118	1- 7	AH	DX	N	D
PFTA-0142FCZZ	572 344 0116	1- 11	AE	DS	N	D
PFTA-0144FCZZ	572 344 0117	2- 21	AE	DJ	N	D
PGiDH1833FCZ1	572 345 3731	10- 11	AC	DJ		C
PGiDH1968FCZZ	572 345 3904	25- 39	AK	EB	N	C
PGiDH2016FCZZ	572 345 3905	34- 14	AC	DJ	N	C
PGiDM1802FCZZ	572 345 2967	17- 18	AK	DX		C
PGiDM1890FCZZ	572 345 3688	7- 5	AC	DJ		C
PGiDM1966FCZ1	572 345 3906	32- 12	AP	EQ	N	C
PGiDM1967FCZZ	572 345 3907	32- 1	AR	EG	N	C
PGiDM1969FCZZ	572 345 3908	27- 24	AN	FQ	N	B
PGiDM1970FCZZ	572 345 3909	27- 2	BB	EQ	N	C
PGiDM1971FCZZ	572 345 3896	28- 7	AY	FQ	N	C
PGiDM1972FCZZ	572 345 3910	28- 15	AY	FQ	N	C
PGiDM1973FCZ5	572 345 3911	15- 36	AS	EQ	N	C
PGiDM1973FCZZ	572 345 3950	15- 36	AU	EZ	N	C
PGiDM1974FCZ1	572 345 3951	14- 6	AV	FG	N	C
PGiDM1974FCZ5	572 345 3912	14- 6	AV	FG	N	C
PGiDM1977FCZZ	572 345 3913	16- 1	AN	EG	N	C
PGiDM1978FCZZ	572 345 3914	17- 35	AW	FG	N	C
PGiDM1979FCZZ	572 345 3915	18- 12	AH	DX	N	C
PGiDM1981FCZZ	572 345 3916	11- 13	AH	DX	N	C
PGiDM1982FCZZ	572 345 3917	17- 44	AF	DS	N	C
PGiDM1983FCZZ	572 345 3918	11- 25	AS	EQ	N	C
PGiDM1984FCZZ	572 345 3919	17- 36	AF	DS	N	C
PGiDM1985FCZZ	572 345 3920	14- 14	AF	DS	N	C
PGiDM1986FCZZ	572 345 3921	13- 25	AF	DS	N	C
PGiDM1987FCZZ	572 345 3922	13- 24	AG	DS	N	C
PGiDM1988FCZZ	572 345 3923	17- 20	AS	EZ	N	C
PGiDM1989FCZZ	572 345 3948	16- 31	AH	DX	N	C
PGiDM1990FCZZ	572 345 3949	16- 30	AH	DX	N	C
PGiDM1991FCZZ	572 345 3924	30- 13	AE	DJ	N	C
PGiDM1992FCZZ	572 345 3925	30- 12	AD	DJ	N	C
PGiDM2007FCZZ	572 345 3926	28- 31	AP	EQ	N	C
PGiDW2015FCZZ	572 345 3897	13- 11	AG	DS	N	C
PGLSP0003QSZZ	572 348 0134	2- 12	BA	FX		D
PGUMS0283FCZ1	572 352 0337	7- 25	AA	DJ		C
PHOG-0385FCZZ	572 355 0251	34- 9	AB	DD		C
PLNS-0076FCZZ	572 372 0099	22- 6	AL	EB	N	B
PMAGT0015FCZZ	572 373 0029	1- 17	AD	DJ		C
PMiR-0164FCZZ	572 374 0221	8- 13	AP	EQ		C
PMLT-1287FCZZ	572 375 1027	20- 30	AB	DJ	N	C
PMLT-1288FCZ1	572 375 1028	20- 28	AB	DJ	N	C
PMLT-1298FCZ1	572 375 1037	6- 29	AE	DS	N	C
PMLT-1303FCZ1	572 375 1030	16- 19	AD	DJ	N	C
PMLT-1304FCZZ	572 375 1031	16- 10	AC	DJ	N	C
PMLT-1305FCZZ	572 375 1032	16- 8	AC	DJ	N	C
PMLT-1312FCZZ	572 375 1033	22- 26	AB	DJ	N	C

PARTS CODE	JAPAN ONLY ORDER CODE	NO.	PRICE R.		NEW	P/R
			Ex.	Ja.		
PMLT-1313FCZZ	572 375 1034	16- 12	AC	DJ	N	C
PMLT-1316FCZZ	572 375 1035	1- 37	AC	DJ	N	C
PMLT-1317FCZZ	572 375 1036	16- 20	AH	DX	N	C
PRDAF0089FCZZ	572 397 0197	58- 4	AU	EZ		C
PRDAR0057FCZ1		58- 3	AF	DS	N	C
PREFL0172FCZZ	572 432 0074	8- 3	AK	DX		C
PRNGP0077FCZZ	572 399 0159	26- 11	AA	DD		C
〃	572 399 0159	28- 23	AA	DD		C
PRNGP0081FCZZ	572 399 0178	17- 31	AA	DJ		C
PRNGP0109FCZZ	572 399 0254	25- 29	AA	DJ	N	C
PRNGP0110FCZZ	572 399 0255	23- 13	AA	DJ	N	C
PSEL-0809FCZZ	572 400 0808	20- 14	AD	DJ	N	C
PSEL-0829FCZ1	572 400 0810	22- 29	AC	DJ	N	C
PSEL-0830FCZZ	572 400 0820	22- 33	AA	DJ	N	C
PSEL-0831FCZZ	572 400 0811	20- 52	AC	DJ	N	C
PSEL-0832FCZZ	572 400 0812	20- 53	AC	DJ	N	C
PSEL-0835FCZ1	572 400 0814	22- 31	AC	DJ	N	C
PSEL-0853FCZZ	572 400 0815	20- 5	AC	DJ	N	C
PSEL-0854FCZZ	572 400 0816	20- 55	AA	DJ	N	C
PSEL-0855FCZZ	572 400 0817	20- 54	AA	DJ	N	C
PSEL-0864FCZZ	572 400 0818	22- 32	AD	DJ	N	C
PSEL-0866FCZZ	572 400 0821	22- 34	AB	DJ	N	C
PSHEP4932FCZ1	572 403 5213	6- 28	AC	DJ		C
PSHEP4968FCZZ	572 403 5231	20- 10	AD	DJ	N	C
PSHEP4970FCZ2	572 403 5232	15- 39	AE	DS	N	C
PSHEP4971FCZZ	572 403 5233	15- 2	AC	DJ	N	C
PSHEP4972FCZ1	572 403 5234	18- 11	AE	DS	N	C
PSHEP4985FCZ1	572 403 5235	18- 19	AE	DJ	N	C
PSHEP4986FCZZ	572 403 5236	21- 27	AC	DJ	N	C
PSHEP4993FCZ2	572 403 5237	15- 40	AE	DS	N	C
PSHEP5006FCZZ	572 403 5238	4- 28	AE	DS	N	C
PSHEP5013FCZ1		36- 10	*	*	N	D
PSHEP5013FCZ2		36- 10	*	*	N	D
PSHEP5013FCZ3		36- 10	*	*	N	D
PSHEP5013FCZ4		36- 10	*	*	N	D
PSHEP5013FCZ5		36- 10	*	*	N	D
PSHEP5013FCZ6		36- 10	*	*	N	D
PSHEP5013FCZ7		36- 10	*	*	N	D
PSHEP5013FCZ8		36- 10	*	*	N	D
PSHEP5013FCZZ		36- 10	*	*	N	D
PSHEP5015FCZZ	572 403 5239	25- 37	AD	DJ	N	C
PSHEP5019FCZZ	572 403 5240	8- 8	AF	DS	N	C
PSHEP5022FCZZ	572 403 5241	14- 23	AC	DJ	N	C
PSHEP5037FCZZ	572 403 5242	14- 7	AC	DJ	N	C
PSHEP5061FCZ1	572 403 5272	22- 13	AD	DJ	N	C
PSHEP5062FCZZ	572 403 5273	22- 5	AB	DJ	N	C
PSHEP5071FCZZ	572 403 5243	14- 15	AB	DJ	N	C
PSHEP5075FCZZ	572 403 5244	6- 18	AF	DS	N	C
PSHEP5076FCZZ	572 403 5245	20- 56	AC	DJ	N	C
PSHEP5086FCZZ	572 403 5246	14- 33	AB	DJ	N	C
PSHEP5087FCZZ	572 403 5247	19- 36	AC	DJ	N	C
PSHEP5089FCZZ	572 403 5248	22- 15	AA	DJ	N	C
PSHEP5111FCZZ	572 403 5279	33- 20	AA	DJ	N	C
PSHEP5115FCZZ	572 403 5280	16- 36	AC	DJ	N	C
PSHEP5119FCZZ	578 403 0860	14- 35	AB	DJ	N	C
PSHEP5121FCZZ	572 403 5283	22- 35	AA	DJ	N	C
PSHEP5127FCZZ	572 403 5323	25- 43	AC	DJ	N	C
PSHEP5130FCZZ		19- 40	AA	DJ	N	C
PSHEZ3130FCZZ	572 403 2466	10- 7	AB	DD		C
PSHEZ4684FCZZ	572 403 4410	58- 5	AC	DJ		C
PSHEZ4788FCZ1	572 403 4682	15- 3	AD	DJ		C
PSHEZ4836FCZZ	572 403 5061	6- 35	AB	DJ		C
PSHEZ4843FCZ1	572 403 5215	6- 27	AC	DJ		C
PSHEZ4879FCZZ	572 403 5068	37- 33	AH	DX		C
PSHEZ4906FCZZ	572 403 5069	4- 25	AC	DJ		C
PSHEZ4933FCZZ	572 403 5099	37- 24	AD	DJ		C
PSHEZ4973FCZZ	572 403 5250	19- 1	AH	DX	N	B
PSHEZ4974FCZZ	572 403 5251	20- 57	AC	DJ	N	B
PSHEZ4997FCZ1	572 403 5253	22- 11	AC	DJ	N	A
PSHEZ4998FCZ1	572 403 5254	22- 12	AB	DJ	N	A
PSHEZ5007FCZZ	572 403 5255	17- 32	AF	DS	N	C
PSHEZ5027FCZZ	572 403 5256	22- 8	AB	DJ	N	B
PSHEZ5059FCZZ	572 403 5210	5- 1	AU	EZ		D
PSHEZ5065FCZZ	572 403 5257	4- 19	AQ	EQ	N	C
PSHEZ5074FCZZ	572 403 5259	27- 33	AC	DJ	N	C
PSHEZ5088FCZZ	572 403 5261	15- 37	AF	DS		C
PSHEZ5099FCZ1	572 403 5281	22- 30	AC	DJ	N	C
PSHEZ5126FCZZ	572 403 5324	20- 63	AF	DS	N	C
PSHT-0094FCZZ	572 407 0120	20- 46	AD	DJ	N	C
PSLDH0178FCZZ	572 408 0142	3- 6	AD	DJ		C
PSTK-0015FCZ2	572 441 0013	5- 6	AU	EZ	N	C

PARTS CODE	JAPAN ONLY ORDER CODE	NO.	PRICE R.		NEW	P/R
			Ex.	Ja.		
PTME-0271FCZZ	572 420 0296	13- 23	AD	DJ		C
PTME-0276FCZ1	572 420 0320	24- 44	AK	EB		A
〃	572 420 0320	25- 12	AK	EB		A
PTME-0290FCZZ	572 420 0346	27- 17	AD	DJ	N	C
PTPE-0243FCZ1	572 423 0239	10- 12	AC	DJ		C
PWiR-0199FCZZ	572 427 1665	7- 1	AR	EQ	N	C
PWiR-0200FCZZ	572 427 1666	7- 7	AR	EQ	N	C
【Q】						
QACCB7623QCZZ	572 500 0067	36- 11	AQ	EQ	N	B
QACCB7626QCPZ		36- 11	＊	＊	N	B
QACCD7912QCPZ	572 500 0094	36- 11	AS	EQ	N	B
QACCE6922QCPZ	572 500 0097	36- 11	AQ	EQ	N	B
QACCJ6912QCPZ	572 500 0095	36- 11	AV	FG	N	B
QACCL7922QCPZ	572 500 0096	36- 11	AN	EQ	N	B
QCNCM0672FCZZ	595 510 0041	55- 1	AB	DD		C
QCNCM0879FCZZ	572 510 0823	51- 1	AF	DS		C
QCNCM0923FC10	572 510 0876	51- 2	AE	DJ		C
〃	572 510 0876	52- 1	AE	DJ		C
〃	572 510 0876	53- 96	AE	DJ		C
QCNCM0923FC12	572 510 0939	51- 3	AE	DJ		C
〃	572 510 0939	55- 2	AE	DJ		C
QCNCM0923FC14	572 510 0937	52- 2	AE	DJ		C
〃	572 510 0937	53- 3	AE	DJ		C
QCNCM0923FC16	572 510 0868	51- 4	AF	DS		C
〃	572 510 0868	52- 3	AF	DS		C
QCNCM0923FC22	572 510 0869	51- 5	AF	DS		C
〃	572 510 0869	53- 4	AF	DS		C
QCNCM0923FC24	572 510 0870	51- 6	AF	DS		C
〃	572 510 0870	52- 4	AF	DS		C
〃	572 510 0870	53- 5	AF	DS		C
QCNCM0923FC32	572 510 0871	51- 7	AG	DS		C
QCNCM0923FC3D	594 510 0463	51- 8	AF	DS		C
〃	594 510 0463	55- 3	AF	DS		C
QCNCM0931FCZZ	572 510 0872	55- 4	AF	DS		C
QCNCM0991FCZZ	572 510 0996	52- 5	AG	DX		C
〃	572 510 0996	56- 1	AG	DX		C
QCNCM0999FCZZ	572 510 1004	12- 18	AC	DJ		C
QCNCM1000FCZZ	572 510 1044	12- 19	AC	DJ		C
QCNCM1069AC0H	596 510 0032	55- 5	AE	DJ		C
QCNCM1069AC1J	569 510 0003	52- 6	AD	DJ		C
〃	569 510 0003	53- 6	AD	DJ		C
〃	569 510 0003	55- 6	AD	DJ		C
QCNCM1069ACZZ	541 510 5071	49- 1	AD	DD		C
QCNCM1156FCZZ	572 510 1226	50- 81	AD	DJ		C
QCNCM1171FCZZ	572 510 1229	54- 1	AE	DS		C
QCNCM1172FCZZ		56- 2	AL	EB	N	C
QCNCM1182FCZZ	572 510 1230	58- 6	AM	EG		C
QCNCM1183FCZZ	572 510 1231	58- 7	AM	EG		C
QCNCM1187FCZZ	572 510 1359	53- 7	AM	EG	N	C
QCNCM7014SC0B	595 510 0337	49- 2	AD	DJ		C
QCNCM7014SC0C	595 510 0338	49- 3	AA	DD		C
〃	595 510 0338	51- 9	AA	DD		C
〃	595 510 0338	53- 8	AA	DD		C
QCNCM7014SC0F	595 510 0346	51- 10	AB	DD		C
〃	595 510 0346	52- 7	AB	DD		C
〃	595 510 0346	55- 7	AB	DD		C
QCNCM7014SC0G	595 510 0347	53- 9	AB	DD		C
QCNCP0340QCZZ	572 510 0921	58- 8	AC	DJ		C
QCNCW0864FCZZ	572 510 0770	55- 8	AG	DX		C
QCNCW0885FCZZ	572 510 0834	51- 11	AG	DX		C
QCNCW0948FCZ6	572 510 1079	53- 10	AC	DJ		C
QCNCW1047FCZZ	572 510 1126	53- 11	AH	DX		C
QCNCW1155FCZZ	572 510 1220	49- 4	AE	DJ		C
〃	572 510 1220	50- 1	AE	DJ		C
QCNCW1157FCZZ	572 510 1358	52- 8	AB	DJ		C
QCNCW1164FCZZ		56- 3	AE	DJ	N	C
QCNCW1165FCZZ		56- 4	AG	DX	N	C
QCNCW1169FCZZ	572 510 1214	52- 9	AG	DS		C
QCNCW1170FCZZ	572 510 1215	51- 13	AG	DS		C
〃	572 510 1215	53- 12	AG	DS		C
QCNCW1186FCZZ	572 510 1352	53- 13	AF	DS		C
QCNCW1190FCZZ	572 510 1360	58- 10	AN	EG		C
QCNCW5380NCZZ	585 510 0432	52- 10	AC	DJ		C
QCNW-0190FCZZ	572 512 0429	31- 38	AD	DJ	N	C
QCNW-0197FCZZ	572 512 0430	35- 3	AL	EB	N	C
〃	572 512 0430	6- 36	AL	EB	N	C
QCNW-0199FCZZ	572 512 0431	8- 15	AE	DJ	N	C
QCNW-0210FCZZ	572 512 0423	37- 37	AE	DJ		C
QCNW-0211FCZZ	572 512 0432	35- 15	AF	DS	N	C
QCNW-0213FCZZ	572 512 0434	35- 4	AH	DX	N	C
〃	572 512 0434	6- 37	AH	DX	N	C

PARTS CODE	JAPAN ONLY ORDER CODE	NO.	PRICE R.		NEW	P/R
			Ex.	Ja.		
QCNW-0214FCZZ	572 512 0435	4- 8	AD	DJ	N	C
QCNW-0215FCZZ	572 512 0436	34- 17	AZ	FQ	N	C
QCNW-7197XCZZ	578 512 0283	36- 27	AH	DX		C
QEARP0138FCZZ	572 514 0107	19- 25	AE	DJ	N	C
QEARP0139FCZZ	572 514 0108	19- 22	AD	DJ	N	C
QEARP0140FCZZ	572 514 0109	22- 19	AD	DJ	N	C
QFS-D1327QCZZ	572 515 0397	55- 9	AE	DS		A
QFS-E1111QCZZ		56- 5	AF	DS		A
QFSHB0028FCZZ	578 516 0011	55- 10	AC	DJ		C
〃	578 516 0011	56- 6	AC	DJ		C
QJAKT0001FCZZ	578 517 0010	50- 2	AD	DJ		C
QJAKT0002FCZZ	578 517 0009	50- 3	AE	DJ		C
QPiN-0003GCZZ	578 523 0004	49-102	AC	DJ		C
〃	578 523 0004	53- 14	AC	DJ		C
〃	578 523 0004	58- 11	AC	DJ		C
QSŌCD0081FCZZ	572 527 0125	50- 82	AL	EB		C
QSŌCN0002ESZZ	578 527 0030	58- 9	AH	DX		C
QSŌCN0005ESZZ	578 527 0032	58- 12	AE	DS		C
QSŌCN0082FCZZ	572 527 0124	49- 5	AP	EQ		C
QSŌCZ0001QSZZ	578 527 0024	53- 15	AL	EB		C
〃	578 527 0024	58- 13	AL	EB		C
QSŌCZ0002QSZZ	578 527 0027	58- 14	AD	DJ		C
QSŌCZ0071FCZZ	572 527 0112	52- 11	AP	EQ		C
QSŌCZ0073FCNA	572 527 0126	58- 15	AL	EB		C
QSŌCZ0073FCZZ	572 527 0115	49- 6	AL	EB		C
〃	572 527 0115	51- 14	AL	EB		C
〃	572 527 0115	53- 16	AL	EB		C
QSŌCZ6428ACZZ	541 527 1013	51- 15	AE	DS		C
〃	541 527 1013	52- 12	AE	DS		C
〃	541 527 1013	53- 17	AE	DS		C
QSW-B0017QSZZ	572 530 0719	13- 6	AF	DS	N	B
〃	572 530 0719	20- 49	AF	DS	N	B
QSW-C1390QCZZ	572 530 0507	30- 1	AN	EQ		B
QSW-C9294QCZZ	572 530 0681	31- 48	AF	DS		B
QSW-C9295QCZZ	572 530 0682	37- 15	AL	EB		B
QSW-M0502FCZZ	572 530 0603	17- 6	AH	DX		B
〃	572 530 0603	30- 3	AH	DX		B
〃	572 530 0603	31- 1	AH	DX		B
QSW-P0005QSZZ	572 530 0672	54- 3	AC	DJ		B
QSW-P0469FCZZ	572 530 0536	54- 4	AD	DS		B
【R】						
RALMB1002LCZZ	594 601 0010	54- 5	AE	DS		B
RCiLF0068FCZZ	572 614 0193	56- 7	AF	DS		C
RCiLZ0089FCZZ	572 614 0239	50- 6	AG	DX		C
RCiLZ0353AFZZ	596 614 0565	58- 16	AH	DX		C
RC-KZ0008QCZZ	572 591 0090	49- 7	AB	DD		C
〃	572 591 0090	50- 4	AB	DD		C
RC-KZ0009QCZZ	572 591 0093	50- 83	AB	DD		C
RC-KZ1054CCN2	541 590 5042	55- 11	AB	DD		C
RCŌRF0046FCZZ	572 615 0085	36- 28	AH	DX	N	C
RCŌRF1057ACZZ	596 615 0149	58- 17	AB	DJ		C
RCRSP0068FCZZ	572 616 0152	49- 8	AG	DS		B
RCRSP0069FCZZ	572 616 0153	49- 9	AG	DS		B
〃	572 616 0153	53- 18	AG	DS		B
RCRSP0071FCZZ		51- 16	AH	DX	N	B
RCRSP0077FCZZ	572 616 0175	53- 19	AF	DS		B
RCRSP0079FCZZ	572 616 0176	53- 20	AF	DS		B
RCRSP0080FCZZ	572 616 0180	58- 18	AF	DS		B
RCRSP6676RCZZ	579 616 0064	53- 21	AG	DX		B
〃	579 616 0064	58- 20	AG	DX		B
RCRSQ0072FCZZ	572 616 0177	52- 13	AF	DS		B
RCRSQ0073FCZZ	572 616 0178	52- 14	AF	DS		B
〃	572 616 0178	53- 22	AF	DS		B
RCRSQ0074FCZZ	572 616 0179	52- 15	AF	DS		B
RCRSZ0001QSZZ	572 616 0100	51- 17	AG	DS		B
〃	572 616 0100	52- 16	AG	DS		B
RCRUA0010FCZZ	572 616 0154	49- 10	AQ	EQ		B
RDENC0004FCZZ	572 685 2080	37- 11	BV	RB		E
〃	572 685 2080	57-901	BV	RB		E
RDENC0012FCZZ	572 685 2218	31- 39	BR	LX	N	E
RDENC0013FCZZ	572 685 2219	31- 37	BK	HG	N	E
RDENC0020FCZ1	572 685 2216	31- 31	BU	NE	N	E
RDENC0021FCZZ	572 685 2177	31- 31	BW	RJ	N	E
RDTCH0155FCZZ	572 618 0167	13- 19	AU	EZ	N	B
RDTCT0153FCZZ	572 618 0168	24- 30	AN	EQ	N	B
〃	572 618 0168	25- 19	AN	EQ	N	B
RFiLN0046FCZZ	572 621 0067	52- 17	AH	DX		C
RFiLN0047FCZZ	572 621 0063	49- 12	AC	DJ		C
〃	572 621 0063	50- 7	AC	DJ		C
RFiLN0048FCZZ	572 621 0064	58- 21	AC	DJ		C
RFiLN2011SCZZ	595 621 0004	50- 8	AC	DJ		C

PARTS CODE	JAPAN ONLY ORDER CODE	NO.	PRICE R.		NEW	P/R
			Ex.	Ja.		
RFiLN5022NCZZ	585 621 0015	53- 23	AC	DJ		C
RFiLZ0004QSZZ	578 621 0030	51- 18	AM	EG		C
RFiLZ1042LCZZ	594 621 0050	49- 13	AC	DJ		C
〃	594 621 0050	52- 18	AC	DJ		C
RFiLZ1043LCZZ	594 621 0051	51- 19	AC	DJ		C
〃	594 621 0051	52- 19	AC	DJ		C
〃	594 621 0051	53- 24	AC	DJ		C
RHETP0084FCZZ	572 623 0099	30- 11	AS	EQ		C
RHETP0099FCZZ	572 623 0103	6- 31	AV	EQ	N	C
RH-iX0002FCZZ	572 573 2550	49- 35	AQ	EQ		B
RH-iX0003QSZZ	578 573 1149	51- 20	AQ	EQ		B
〃	578 573 1149	52- 20	AQ	EQ		B
RH-iX0004FCZZ	572 573 2545	49- 53	AS	EQ		B
RH-iX1013ACZZ	596 573 4270	58- 22	BK	HC		B
RH-iX3103YAZZ	595 573 5963	52- 21	AG	DS		B
〃	595 573 5963	53- 25	AG	DS		B
RLMPD0674FCZ1	572 626 0648	8- 1	BE	GN	N	B
RLMPU0668FCZZ	572 626 0644	24- 41	BA	FX	N	B
RLMPU0669FCZZ	572 626 0645	24- 41	BA	FX	N	B
RLMPU0670FCZZ	572 626 0646	25- 13	AZ	FQ	N	B
RLMPU0671FCZZ	572 626 0647	25- 13	AZ	FQ	N	B
RLMPU0672FCZZ	572 626 0649	24- 41	BA	FX	N	B
RLMPU0673FCZZ	572 626 0650	25- 13	AZ	FQ	N	B
RMEMM0001FCZZ	572 629 0001	53- 26	BZ	TF		B
RMOTP0891FCZZ	572 630 1123	12- 7	BG	GT	N	B
RMOTS0879FCNA	572 630 1131	23- 29	BD	GN	N	B
RMOTS0879FCZZ	572 630 1124	23- 10	BD	GN	N	B
RMOTS0881FCZZ	572 630 1125	20- 38	BC	GD	N	B
RMOTS0882FCZZ	572 630 1126	21- 29	BA	FX	N	B
RMOTS0883FCZZ	572 630 1127	31- 56	BA	FX	N	B
RMOTS0884FCZZ	572 630 1128	26- 3	BA	FX	N	B
RMOTS0885FCZ1	572 630 1129	7- 19	BE	GN	N	B
RMOTS0890FCZZ	572 630 1130	28- 1	BA	FX	N	B
RMPTC4103QCJJ	594 631 0091	52- 22	AC	DD		B
RMPTC4330QCJJ	594 631 0082	52- 23	AC	DD		B
RMPTC4473QCJJ	593 631 0296	52- 24	AC	DD		B
RMPTR4100ACZZ	567 631 0099	58- 23	AB	DD		B
RMPTR4103ACZZ	567 631 0100	58- 24	AB	DD		B
RMPTR4330ACZZ	567 631 0109	58- 25	AB	DD		B
RMPTW4100QCJJ	572 631 0264	53- 27	AA	DD		B
RMPTW4101QCJJ	521 631 0027	51- 21	AB	DD		B
〃	521 631 0027	53- 28	AB	DD		B
RMPTW4102QCJJ	567 631 0055	51- 22	AB	DD		B
RMPTW4103QCJJ	571 631 0147	51- 23	AB	DD		B
〃	571 631 0147	53- 29	AB	DD		B
〃	571 631 0147	55- 12	AB	DD		B
RMPTW4330QCJJ	567 631 0058	51- 24	AB	DD		B
RMPTW4470QCJJ	521 631 0024	53- 30	AB	DD		B
RMPTW4472QCJJ	567 631 0059	51- 26	AB	DD		B
RMPTW4473QCJJ	567 631 0060	51- 27	AB	DD		B
〃	567 631 0060	55- 13	AB	DD		B
RPLU-0013QSZZ	572 647 0336	20- 35	AN	EG		B
RRLYD1211QCZZ	572 637 0164	50- 10	AH	DX		B
RRLYD1411QCZZ	572 637 0165	50- 11	AM	EG		B
RRLYD3211QCZZ	595 637 0065	50- 84	AM	EG		B
RR-WZ0418FCZZ	572 580 1088	50- 9	AF	DS		B
RTHM-0021FCZZ	572 644 0029	25- 18	AN	EG		B
RTHM-0022FCZZ	572 644 0030	24- 27	AN	EG		B
RTRNP0534FCZZ	572 654 0285	50- 85	AT	EZ		B
RTRNP2105SCZZ	595 654 0032	50- 86	AP	EQ		B
RTRNZ0511FCZZ	572 660 0367	56- 8	AQ	EQ		B
【S】						
SPAKA0581YSZZ	572 902 1718	36- 7	AE	DS	N	C
SPAKA4693FCZZ	572 902 0929	36- 18	AE	DS		D
SPAKA6075FCZZ	572 902 1602	36- 22	AE	DJ	N	D
SPAKA6235DSZZ	572 902 1719	36-104	AH	DX	N	D
SPAKA6302FCZ1	572 902 1705	36- 17	AD	DJ	N	D
SPAKA6336FCZZ	572 902 1706	36- 2	AK	EB	N	D
SPAKA6337FCZZ	572 902 1707	36- 3	AN	EG	N	D
SPAKA6338FCZZ	572 902 1708	36- 2	AL	EB	N	D
SPAKA6339FCZZ	572 902 1709	36- 3	AN	EQ	N	D
SPAKA6345FCZZ	572 902 1713	36- 26	AE	DJ	N	D
SPAKA6346FCZZ	572 902 1714	36- 12	AD	DJ	N	D
SPAKA6384FCZZ	572 902 1721	36- 2	AL	EB	N	D
SPAKA6385FCZZ	572 902 1722	36- 3	AP	EQ	N	D
SPAKA6386FCZZ	572 902 1723	36-103	AL	EB	N	D
SPAKA6440FCZZ	572 902 1724	36-102	AL	EB	N	D
SPAKA6450FCZZ		36- 22	AD	DJ	N	D
SPAKC6334DS11		36- 1	BE	GN	N	D
SPAKC6334DS12	572 901 1931	36- 1	BU	NN	N	D
SPAKC6334DS14		36- 1	BE	GN	N	D
SPAKC6334DS15	572 901 1932	36- 1	BU	NN	N	D
SPAKC6335DS11		36- 1	BE	GN	N	D
SPAKC6335DSZZ	572 901 1915	36- 1	BB	GD	N	D
SPAKC6383DS11		36- 1	BF	GN	N	D
SPAKC6383DSZZ	572 901 1922	36- 1	AZ	FQ	N	D
SSAKA0006UCZZ	541 906 1016	36- 30	AA	DD		C
SSAKA2440QCZZ	595 906 0005	36- 13	AB	DD		D
SSAKA3640QCZZ	595 906 0002	36- 8	AB	DD		C
SSAKA5003CCZZ	500 906 0006	36- 21	AA	DD		C
SSAKH3013CCZZ	500 906 0015	36- 29	AA	DD		C
SSAKZ0018FCZZ	572 906 0119	36- 4	AN	EG		D
【T】						
TCADS1511FCZZ	572 913 0956	36- 10	AC	DJ		D
TCADS1512FCZZ	572 913 0957	36- 10	AB	DJ		D
TCADZ1178FCZZ	572 913 0651	36- 15	AB	DJ		D
TCADZ1275FCZZ	572 913 0734	36- 24	AB	DJ		D
TCADZ1593FCZZ	572 913 0991	36-105	AC	DJ	N	D
TCADZ1595FCZZ	572 913 0993	20- 62	AC	DJ	N	C
TCADZ6015FCZZ	572 913 0988	36-101	AC	DJ	N	D
TCADZ6017FCZZ	572 913 0990	36- 10	AF	DS	N	D
TCADZ6017GHZZ		36- 10	*	*	N	D
TCAUA0770FCZZ	572 914 0035	1- 42	AB	DD		C
TCAUH1035FCZZ	572 914 0672	30- 7	AC	DJ		C
TiNSD2344GHZZ		36- 10	*	*	N	D
TiNSD2359GHZZ		36- 10	*	*	N	D
TiNSD2375GHZZ		36- 10	*	*	N	D
TiNSD2391GHZZ		36- 10	*	*	N	D
TiNSD2457GHZZ		36- 10	*	*	N	D
TiNSE2332FCZZ	572 916 2065	36- 10	BA	FX	N	D
TiNSE2333GHZZ		36- 10	*	*	N	D
TiNSE2334FCZZ	572 916 2055	36- 10	BB	GD	N	D
TiNSE2334GHZZ		36- 10	*	*	N	D
TiNSE2347FCZZ	572 916 2066	36- 10	AP	EQ	N	D
TiNSE2348GHZZ		36- 10	*	*	N	D
TiNSE2349FCZZ	572 916 2056	36- 10	AQ	EQ	N	D
TiNSE2349GHZZ		36- 10	*	*	N	D
TiNSE2363FCZZ	572 916 2057	36- 10	AM	EG	N	D
TiNSE2364GHZZ		36- 10	*	*	N	D
TiNSE2365FCZZ	572 916 2058	36- 10	AM	EG	N	D
TiNSE2365GHZZ		36- 10	*	*	N	D
TiNSE2379FCZZ	572 916 2059	36- 10	AN	EQ	N	D
TiNSE2380GHZZ		36- 10	*	*	N	D
TiNSE2381FCZZ	572 916 2060	36- 10	AN	EQ	N	D
TiNSE2381GHZZ		36- 10	*	*	N	D
TiNSE2445FCZZ	572 916 2074	36- 10	AM	EG	N	D
TiNSE2446GHZZ		36- 10	*	*	N	D
TiNSE2447FCZZ	572 916 2075	36- 10	AM	EG	N	D
TiNSE2447GHZZ		36- 10	*	*	N	D
TiNSF2336FCZZ	572 916 2067	36- 10	BA	FX	N	D
TiNSF2336GHZZ		36- 10	*	*	N	D
TiNSF2351FCZZ	572 916 2068	36- 10	AP	EQ	N	D
TiNSF2351GHZZ		36- 10	*	*	N	D
TiNSF2367FCZZ	572 916 2061	36- 10	AM	EG	N	D
TiNSF2367GHZZ		36- 10	*	*	N	D
TiNSF2383FCZZ	572 916 2062	36- 10	AN	EQ	N	D
TiNSF2383GHZZ		36- 10	*	*	N	D
TiNSF2449FCZZ	572 916 2076	36- 10	AM	EG	N	D
TiNSF2449GHZZ		36- 10	*	*	N	D
TiNSG2341GHZZ		36- 10	*	*	N	D
TiNSG2356GHZZ		36- 10	*	*	N	D
TiNSG2372GHZZ		36- 10	*	*	N	D
TiNSG2388GHZZ		36- 10	*	*	N	D
TiNSG2454GHZZ		36- 10	*	*	N	D
TiNSH2339GHZZ		36- 10	*	*	N	D
TiNSH2354GHZZ		36- 10	*	*	N	D
TiNSH2370GHZZ		36- 10	*	*	N	D
TiNSH2386GHZZ		36- 10	*	*	N	D
TiNSH2452GHZZ		36- 10	*	*	N	D
TiNSi2338GHZZ		36- 10	*	*	N	D
TiNSi2353GHZZ		36- 10	*	*	N	D
TiNSi2369GHZZ		36- 10	*	*	N	D
TiNSi2385GHZZ		36- 10	*	*	N	D
TiNSi2451GHZZ		36- 10	*	*	N	D
TiNSJ2329FCZZ	572 916 2045	36- 10	BB	GD	N	D
TiNSJ2330FCZZ	572 916 2046	36- 10	BA	FX		D
TiNSJ2331FCZZ	572 916 2047	36- 10	AV	FG	N	D
TiNSJ2362FCZZ	572 916 2063	36- 10	AK	EB	N	D
TiNSJ2378FCZZ	572 916 2064	36- 10	AS	EQ	N	D
TiNSJ2444FCZZ	572 916 2078	36- 10	AM	EG	N	D
TiNSS2337GHZZ		36- 10	*	*	N	D
TiNSS2352GHZZ		36- 10	*	*	N	D

PARTS CODE	JAPAN ONLY ORDER CODE	NO.	PRICE R.		NEW	P/R
			Ex.	Ja.		
TiNSS2368GHZZ		36- 10	*	*	N	D
TiNSS2384GHZZ		36- 10	*	*	N	D
TiNSS2450GHZZ		36- 10	*	*	N	D
TiNSW2340GHZZ		36- 10	*	*	N	D
TiNSW2355GHZZ		36- 10	*	*	N	D
TiNSW2371GHZZ		36- 10	*	*	N	D
TiNSW2387GHZZ		36- 10	*	*	N	D
TiNSW2453GHZZ		36- 10	*	*	N	D
TiNSZ2342GHZZ		36- 10	*	*	N	D
TiNSZ2343GHZZ		36- 10	*	*	N	D
TiNSZ2357GHZZ		36- 10	*	*	N	D
TiNSZ2358GHZZ		36- 10	*	*	N	D
TiNSZ2373GHZZ		36- 10	*	*	N	D
TiNSZ2374GHZZ		36- 10	*	*	N	D
TiNSZ2389GHZZ		36- 10	*	*	N	D
TiNSZ2390GHZZ		36- 10	*	*	N	D
TiNSZ2455GHZZ		36- 10	*	*	N	D
TiNSZ2456GHZZ		36- 10	*	*	N	D
TLABF2705FCZZ	577 917 0006	1- 43	AB	DD		C
TLABH4186FCZZ	572 917 3188	1- 45	AE	DS		C
TLABH4746FCZZ	572 917 3691	24- 2	AH	DX	N	C
TLABH4747FCZ1	572 917 3692	20- 41	AH	DX	N	C
TLABH4747FCZZ	572 917 3749	20- 41	AE	DJ	N	C
TLABH4748FCZZ	572 917 3693	2- 26	AF	DS	N	C
TLABH4749FCZZ	572 917 3705	2- 26	AE	DJ	N	C
TLABS4306FCZZ	572 917 3307	1- 47	AC	DJ		C
TLABZ0059QSZZ	572 917 3355	1- 50	AE	DJ		C
TLABZ4047FCZZ	572 917 3041	10- 4	AC	DJ		C
〃	572 917 3041	1- 41	AC	DJ		C
TLABZ4238FCZZ	572 917 3233	10- 32	AD	DJ		C
TLABZ4239FCZZ	572 917 3308	10- 32	AD	DJ		C
TLABZ4240FCZZ	572 917 3309	10- 32	AD	DJ		C
TLABZ4335FCZZ	572 917 3385	7- 39	AB	DJ		C
TLABZ4694FCZZ	572 917 3593	1- 48	AF	DS		C
TLABZ4720FCZZ	572 917 3607	1- 49	AC	DJ		C
TLABZ4742FCZZ	572 917 3702	1- 33	AL	EB	N	C
TLABZ4753FCZZ	572 917 3695	22- 23	AA	DJ	N	C
TLABZ4754FCZZ	572 917 3696	22- 23	AA	DJ	N	C
TLABZ4755FCZZ	572 917 3697	22- 23	AA	DJ	N	C
TLABZ4756FCZZ	572 917 3698	22- 23	AB	DJ	N	C
TLABZ4759FCZZ	572 917 3699	13- 30	AH	DX	N	C
TLABZ4766FCZ1	572 917 3700	22- 3	AC	DJ	N	C
TLABZ4772FCZ1	572 917 3715	20- 50	AF	DJ	N	B
【U】						
UBATi0014FCZZ	572 932 0022	53- 31	AN	EQ		B
UBATL2033SCZZ	595 932 0026	58- 26	AK	EB		B
UCLEZ0169FCZZ	572 704 0125	20- 12	AQ	EQ	N	A
UCLEZ0170FCZZ	572 704 0126	20- 6	AK	EB	N	A
UCLEZ0171FCZ2	572 704 0127	22- 14	AX	FG	N	A
UCLEZ0172FCZ1	572 704 0128	22- 18	AQ	EQ	N	A
UKÖG-0304FCZZ	572 941 0300	36- 10	AQ	EQ	N	D
【V】						
VCAAPF0JJ107M	572 590 0055	58- 27	AF	DS		C
VCCCCZ1EH221J	595 593 1444	49- 14	AB	DD		C
〃	595 593 1444	50- 14	AB	DD		C
VCCCCZ1HH100D	521 593 0027	49- 15	AA	DD		C
VCCCCZ1HH101J	521 593 0028	50- 15	AA	DD		C
〃	521 593 0028	58- 28	AA	DD		C
VCCCCZ1HH150J	521 593 0029	49- 16	AA	DD		C
〃	521 593 0029	52- 25	AA	DD		C
VCCCCZ1HH151J	596 593 1667	53- 32	AC	DD		C
VCCCCZ1HH180J	578 593 0186	51- 29	AA	DD		C
VCCCCZ1HH220J	521 593 0023	51- 30	AA	DD		C
〃	521 593 0023	52- 26	AA	DD		C
〃	521 593 0023	53- 33	AA	DD		C
〃	521 593 0023	58- 29	AA	DD		C
VCCCCZ1HH270J	567 593 0396	53- 34	AA	DD		C
VCCUCY1AJ105Z	596 593 0899	51- 31	AC	DD		C
VCE9EA1CW106M	572 594 0924	50- 21	AC	DD		C
VCE9GA1CW476M	572 594 0925	50- 22	AD	DD		C
VCEAEA0JW107M	541 591 5218	52- 27	AA	DD		C
VCEAGA0JW107M	541 591 5321	51- 32	AC	DD		C
VCEAGA1AW107M	585 594 0057	53- 35	AB	DD		C
VCEAGA1AW108M	597 594 0001	51- 33	AC	ZT		C
VCEAGA1AW476M	572 594 0061	52- 28	AA	DD		C
〃	572 594 0061	53- 36	AA	DD		C
〃	572 594 0061	55- 14	AA	DD		C
VCEAGA1AW477M	541 591 5323	51- 34	AB	DD		C
〃	541 591 5323	52- 29	AB	DD		C
VCEAGA1CW106M	541 591 5281	52- 30	AA	DD		C
〃	541 591 5281	55- 15	AA	DD		C

PARTS CODE	JAPAN ONLY ORDER CODE	NO.	PRICE R.		NEW	P/R
			Ex.	Ja.		
VCEAGA1CW107M	541 591 5089	52- 31	AC	DD		C
VCEAGA1HW224M	501 591 5002	52- 32	AA	DD		C
VCEAGA1VW107M	541 591 5325	52- 33	AB	DD		C
VCEAGA1VW227M	572 594 0086	52- 34	AB	DD		C
VCEAGU1VW108M	585 594 0059	55- 16	AE	DX		C
VCEAJU1CW476M	596 594 0062	54- 6	AB	DD		C
VCEAPH1VC225M	567 594 0130	58- 30	AC	DD		C
VCEAPS1AC227M	572 594 0923	58- 31	AD	DJ		C
VCEAPS1CC106M	588 594 0085	49- 17	AC	DD		C
〃	588 594 0085	58- 32	AC	DD		C
VCEAPS1CC226M	593 594 0584	58- 33	AC	DJ		C
VCEAPS1CC476M	567 594 0128	58- 34	AC	DJ		C
VCEAPS1HC475M	567 594 0132	49- 18	AC	DJ		C
VCEAPZ1EW107M	588 594 0089	49- 19	AD	DJ		C
〃	588 594 0089	58- 35	AD	DJ		C
VCEAPZ1EW476M	594 594 0040	49- 20	AE	DJ		C
VCEAZA1AW477M	572 594 0828	53- 37	AC	DD		C
VCEAZA1EW476M	578 594 0148	50- 16	AC	DD		C
VCEAZA1HW105M	594 594 0295	50- 17	AB	DD		C
VCEAZA1HW225M	594 594 0291	50- 87	AB	DD		C
VCEAZA1HW226M	578 594 0178	50- 18	AC	DD		C
VCEAZA1HW334M	594 594 0294	50- 19	AB	DD		C
VCEAZA1HW475M	572 594 0761	50- 20	AB	DD		C
VCEAZA1VW476M	578 594 0149	55- 17	AC	DD		C
VCEAZU0JW338M	572 594 0926	51- 36	AE	DJ		C
VCEAZU1VW106M	578 594 0140	51- 35	AB	DD		C
VCEAZU1VW477M	572 594 0655	51- 37	AD	DJ		C
VCFYDA1HA104J	572 596 0404	49- 21	AC	DD		C
VCFYDA1HA105J	572 596 0405	49- 22	AE	DJ		C
〃	572 596 0405	50- 88	AE	DJ		C
VCFYDA1HA333J	572 596 0406	49- 23	AC	DD		C
VCFYDA1HA474J	595 596 0218	49- 24	AD	DJ		C
VCFYJU2AA824K	572 596 0377	50- 89	AF	DS		C
VCFYJU2EA105K	595 596 0062	50- 23	AE	DS		C
VCFYJU2GA473K	595 596 0091	50- 90	AC	DD		C
VCFYJU2JA103K	595 596 0093	56- 9	AC	DD		C
VCKYCY1EB104K	596 593 1153	53- 38	AG	DX		C
VCKYCY1HB223K	595 593 1641	51- 38	AC	DD		C
VCKYCY1HF223Z	594 593 0072	52- 35	AA	DD		C
VCKYCZ1AB333K	595 593 1674	50- 91	AB	DD		C
VCKYCZ1AF224Z	572 593 0355	49- 25	AC	DD		C
VCKYCZ1CB103K	595 593 1450	49-103	AA	DD		C
VCKYCZ1CF104Z	521 593 0017	49- 26	AB	DD		C
〃	521 593 0017	51- 39	AB	DD		C
〃	521 593 0017	52- 36	AB	DD		C
〃	521 593 0017	53- 39	AB	DD		C
〃	521 593 0017	58- 37	AB	DD		C
VCKYCZ1EB103K	567 593 0417	53- 40	AB	DD		C
VCKYCZ1EB472K	521 593 0054	49- 27	AA	DD		C
〃	521 593 0054	52- 37	AA	DD		C
VCKYCZ1EF223Z	567 593 0398	56- 10	AA	DD		C
VCKYCZ1HB102K	521 593 0030	49- 28	AA	DD		C
〃	521 593 0030	50- 25	AA	DD		C
〃	521 593 0030	51- 40	AA	DD		C
〃	521 593 0030	52- 38	AA	DD		C
〃	521 593 0030	53- 41	AA	DD		C
〃	521 593 0030	55- 18	AA	DD		C
〃	521 593 0030	58- 38	AA	DD		C
VCKYCZ1HB222K	521 593 0032	50- 92	AA	DD		C
〃	521 593 0032	55- 19	AA	DD		C
VCKYCZ1HB471K	521 593 0033	49- 29	AA	DD		C
〃	521 593 0033	50- 26	AA	DD		C
〃	521 593 0033	53- 42	AA	DD		C
〃	521 593 0033	55- 20	AA	DD		C
〃	521 593 0033	56- 11	AA	DD		C
VCKYCZ1HF103Z	567 593 0374	52- 39	AA	DD		C
〃	567 593 0374	58- 39	AA	DD		C
VCKYPU1EB223Z	572 593 0312	54- 7	AB	DD		C
VCKYPU3SD150K	572 593 0418	56- 12	AC	DD		C
VCKYTQ0JF106Z	596 593 1290	52- 40	AD	DJ		C
VCQYNU1HM223K	595 596 0107	50- 93	AA	DD		C
VHD0R5G4B42-1	595 570 0003	50- 27	AF	DS		B
VHD10DDA40+-1	572 570 0569	50- 29	AD	DJ		B
VHD1SS133//-1	541 570 5063	49- 32	AA	DD		B
〃	541 570 5063	50- 28	AA	DD		B
VHD1SS355//-1	595 570 0304	53- 43	AB	DJ		B
VHDDAN202U/-1	500 570 5015	51- 41	AB	DD		B
〃	500 570 5015	52- 41	AB	DD		B
〃	500 570 5015	53- 44	AB	DD		B
VHDDAP202U/-1	500 570 5023	51- 42	AB	DD		B
〃	500 570 5023	52- 42	AB	DD		B

PARTS CODE	JAPAN ONLY ORDER CODE	NO.	PRICE R.		NEW	P/R
			Ex.	Ja.		
VHDDAP202U/-1	500 570 5023	53- 45	AB	DD		B
VHDDSM1D1//-1	572 570 0366	55- 21	AB	DJ		B
VHDDSS133//-1	500 570 5006	51- 43	AA	DD		B
〃	500 570 5006	52- 43	AA	DD		B
〃	500 570 5006	54- 8	AA	DD		B
〃	500 570 5006	55- 22	AA	DD		B
VHDM1FS4///-1	521 570 0024	52- 44	AD	DJ		B
VHDMA704A//-1	572 570 0328	51- 44	AC	DJ		B
〃	572 570 0328	52- 45	AC	DJ		B
VHDRA13++++-1	572 570 0560	51- 45	AD	DJ		B
〃	572 570 0560	52- 46	AD	DJ		B
〃	572 570 0560	55- 23	AD	DJ		B
VHDRB051L40-1	594 570 0251	58- 40	AE	DS		B
VHDRB451F//-1	594 570 0199	53- 46	AD	DS		B
〃	594 570 0199	58- 41	AD	DS		B
VHDRB751V40-1	521 570 0013	49- 31	AD	DJ		B
VHEHZS2C1//-1	595 571 0250	50- 30	AB	DJ		B
VHEHZS3B1//-1	595 571 0002	52- 47	AC	DJ		B
VHEMTZJ33B+-1	572 571 0264	50- 31	AC	DJ		B
VHEMTZJ4R7B-1	595 571 0272	50- 32	AC	DJ		B
VHEMTZJ8.2B-1	595 571 0265	50- 33	AB	DJ		B
VHERD22FB//-1	500 571 0074	51- 46	AD	DJ		B
VHERD5.1EB2-1	595 571 0006	49- 33	AA	DD		B
VHH103AT-2/-1	595 572 0003	51- 47	AG	DS		B
〃	595 572 0003	56- 13	AG	DS		B
VHHMSMDC014-1	596 572 0031	51- 48	AF	DS		B
VHi107AP66C-1	572 573 2908	58- 42	BX	TF		B
VHi1085CZAD-1	572 573 2909	58- 43	AH	DX		B
VHi161622FH1C	572 573 2848	52- 48	BA	FX		B
VHi2309SC1H-1	572 573 2569	58- 44	AT	EZ		B
VHi23S09SC+-1	572 573 2849	53- 47	AV	FG		B
VHi28F081L07F	572 573 2902	31- 26	AY	FQ	N	E
VHi28F081L11F	572 573 2973	38- 24	AY	FQ	N	E
VHi28F082L06S	572 573 2912	37- 38	BF	GN	N	E
VHi28F161L01F	572 573 2903	6- 8	BA	FX	N	C
VHi28F162L01F	572 573 2904	6- 10	BD	GN	N	C
VHi28F322L22F	572 573 2905	34- 22	BH	HC	N	C
VHi28F322L23F	572 573 2906	34- 22	BH	HC	N	C
VHi28F322L32F	572 573 2974	38- 23	BG	GT	N	E
VHi28F322L33F		38- 22	BM	HR	N	E
VHi29F04-01FC	572 573 2494	49- 39	AX	FG		B
VHi58C256AP-1	572 573 2235	53- 48	BB	GD		B
VHi60852ATB-1	572 573 2910	58- 45	AX	FG		B
VHi61LV6416-1	578 573 1169	52- 49	AX	FG		B
VHi65946P110C	572 573 2874	51- 49	BB	GD		B
VHi65949P03-1	572 573 2875	53- 50	BE	GN		B
VHi74HC132M-1	572 573 2497	49- 57	AF	DS		B
VHi74HC74AM-1	572 573 2484	49- 58	AE	DJ		B
VHi74LCX04M-1	578 573 1174	49- 59	AE	DJ		B
VHi74LCX08MTC	572 573 2090	52- 50	AE	DJ		B
〃	572 573 2090	58- 46	AE	DJ		B
VHi74LCX14MTC	572 573 2091	52- 51	AE	DJ		B
〃	572 573 2091	53- 51	AE	DJ		B
〃	572 573 2091	58- 47	AE	DJ		B
VHi74LCX244MT	572 573 2092	52- 52	AM	DX		B
〃	572 573 2092	53- 52	AM	DX		B
〃	572 573 2092	58- 48	AM	DX		B
VHi74LCX245MT	572 573 2093	52- 53	AM	DX		B
〃	572 573 2093	53- 53	AM	DX		B
〃	572 573 2093	58- 49	AM	DX		B
VHi74LVX08M-1	578 573 1155	49- 60	AE	DJ		B
VHi74LVX14M-1	572 573 2485	49- 61	AE	DJ		B
VHi74LVX16128	578 573 1048	58- 50	AP	EQ		B
VHi74VHC08/-1	572 573 1476	52- 54	AE	DS		B
VHi74VHC32MTC	572 573 2097	51- 50	AD	DJ		B
VHi755B300E-1	572 573 2911	58- 51	BZ	TF		B
VHi7SZ125M5-1	572 573 2486	58- 52	AE	DS		B
VHi85672011-1	572 573 2852	53- 54	BV	RB		B
VHi90C363A+-1	572 573 2854	52- 56	AU	FG		B
VHi90CF364A-1	572 573 2853	53- 55	AU	FG		B
VHiBU4066BCF1	595 573 3115	50- 34	AD	DJ		B
VHiCY25811S-1	572 573 2869	53- 56	AN	EG		B
VHiCY25814S-1	572 573 2870	53- 58	AN	EG		B
VHiD3032+++-1	572 573 2925	58- 55	AX	FG	N	B
VHiD8501A++-1	572 573 2924	58- 56	BS	MW	N	B
VHiEES02L400P	572 573 2498	49- 34	AG	DX		B
VHiEES04L400P	572 573 2414	58- 57	AG	DX		B
VHiH8D3063+-1	578 573 1163	50- 95	AW	FG		B
VHiH8S2320+-1	578 573 1145	51- 52	AY	FQ		B
〃	578 573 1145	52- 58	AY	FQ		B
VHiHC151MTC-1	572 573 2837	51- 53	AE	DJ		B

PARTS CODE	JAPAN ONLY ORDER CODE	NO.	PRICE R.		NEW	P/R
			Ex.	Ja.		
VHiHG73C095-1	572 573 2459	52- 59	AY	FQ		B
VHiHi207ECB-1	578 573 1292	53- 59	AN	EQ		B
VHiHN58V65A-1	572 573 2288	51- 54	AW	FG		B
〃	572 573 2288	52- 60	AW	FG		B
VHiLCX244SJ-1	572 573 2481	49- 36	AG	DX		B
VHiLCX574MT-1	572 573 2871	53- 60	AF	DS		B
VHiLCX74MTC-1	572 573 2444	53- 61	AE	DJ		B
VHiLHF80J01-1	595 573 6174	53- 62	AX	FG		B
VHiLM111718-1	578 573 1166	49- 37	AH	DX		B
VHiLM324D++-1	572 573 2445	51- 55	AE	DJ		B
VHiLM339D++-1	572 573 2446	51- 56	AE	DJ		B
VHiLM358DR+-1	578 573 1112	52- 61	AF	DS		B
VHiLM393D++-1	572 573 2447	53- 63	AE	DJ		B
VHiLM98513+-1	572 573 2872	52- 62	AY	FQ		B
VHiM3032ATC-1	572 573 2907	53- 64	AT	EZ	N	B
VHiM51957BFP1	567 573 0126	51- 57	AH	DX		B
〃	567 573 0126	52- 63	AH	DX		B
〃	567 573 0126	53- 65	AH	DX		B
VHiM87J8310-1	572 573 2841	52- 64	BQ	LP		B
VHiM87L4240-1	572 573 2842	52- 65	BG	GT		B
VHiM87M1290-1	572 573 2843	52- 66	BZ	TF		B
VHiMAX3225E-1	572 573 2482	49- 38	AT	EZ		B
〃	572 573 2482	53- 66	AT	EZ		B
VHiMBLV064N-1	572 573 2873	52- 67	BA	FX		B
VHiMN195004-1	572 573 2468	49- 40	BN	HZ		B
VHiMTD2007F-1	567 573 1405	52- 68	AU	EZ		B
VHiNJM2113M-1	595 573 3547	49- 42	AG	DS		B
VHiNJM2903M/-	572 573 0025	58- 60	AD	DJ		B
VHiNJM4558MF1	572 573 1736	49- 43	AE	DJ		B
〃	572 573 1736	50- 35	AE	DJ		B
VHiNJU4051M-1	595 573 3786	49- 44	AG	DX		B
VHiNJU4052BMF	578 573 0533	49- 45	AG	DS		B
VHiNJU4053BMF	578 573 0363	49- 46	AG	DS		B
VHiNJU6356E-1	572 573 1737	53- 67	AK	DX		B
〃	572 573 1737	58- 61	AK	DX		B
VHiPM2500++-1	572 573 2409	53- 68	BP	LP		B
VHiPST591CMT1	595 573 2858	49- 47	AE	DS		B
VHiPST591iM-1	585 573 1696	49- 48	AG	DS		B
VHiPST598DN-1	572 573 2472	58- 62	AF	DS		B
VHiPST598iN-1	523 573 0081	58- 63	AF	DS		B
VHiPST994C+-1	572 573 2496	49- 49	AG	DS		B
VHiR1117D25-1	572 573 2900	58- 64	AG	DS		B
VHiSD4M16L1-1	572 573 2410	49- 50	AZ	FX		B
VHiSD8M16L1-1	572 573 2460	52- 70	BB	GD		B
〃	572 573 2460	53- 69	BB	GD		B
VHiSH770910-1	578 573 1168	49- 51	BH	GX		B
〃	578 573 1168	53- 70	BH	GX		B
VHiSLA7024MT/	572 573 1217	55- 24	AS	EQ		B
VHiSLA7031M-1	572 573 2844	51- 59	AQ	EQ		B
〃	572 573 2844	55- 25	AQ	EQ		B
VHiSLA7032M-1	572 573 2897	51- 60	AR	EQ		B
VHiSR1024-7LL	572 573 2461	53- 71	AU	EZ		B
VHiSR1024L15J	572 573 2483	49- 52	AU	FG		B
VHiTA31076F-1	572 573 1739	50- 36	AH	DX		B
VHiTA7291AS-1	572 573 2570	51- 61	AG	DX		B
VHiTD62003AF/	572 573 2085	51- 62	AE	DS		B
〃	572 573 2085	52- 71	AE	DS		B
VHiTD62503F/-	572 573 0907	49- 54	AG	DX		B
〃	572 573 0907	52- 72	AG	DX		B
VHiTHS56F//-1	595 573 3362	50- 97	AS	EZ		B
VHiTR88017S-1	572 573 2469	49- 55	BA	FX		B
VHiUPD65946-1	572 573 2470	49- 56	BB	GD		B
VHiUPD85632-1	572 573 2845	52- 73	BM	HV		B
VHiUPD85658-1	572 573 2846	52- 74	BV	RB		B
VHiVC4051MT-1	572 573 2856	51- 63	AF	DS		B
VHiVHC14MTC-1	572 573 2847	51- 64	AD	DJ		B
VHiVHCT14AM-1	578 573 1092	51- 65	AE	DJ		B
VHiVHCT244T-1	595 573 5596	55- 26	AK	DX		B
VHiVT574MTC-1	572 573 2857	51- 67	AF	DS		B
VHP1LHEE-002A	578 574 0042	49- 62	AC	DJ		B
VHP1LHLE-002A	578 574 0043	54- 9	AC	DJ		B
VHPGP1A22LC-1	572 574 0100	6- 15	AK	EB		B
VHPGP1A71L3-1	572 568 0153	11- 22	AG	DS	N	B
〃	572 568 0153	13- 5	AG	DS	N	B
〃	572 568 0153	15- 28	AG	DS	N	B
〃	572 568 0153	17- 3	AG	DS	N	B
〃	572 568 0153	21- 25	AG	DS	N	B
〃	572 568 0153	23- 15	AG	DS	N	B
〃	572 568 0153	25- 9	AG	DS	N	B
〃	572 568 0153	28- 4	AG	DS	N	B
〃	572 568 0153	28- 40	AG	DS	N	B

PARTS CODE	JAPAN ONLY ORDER CODE	NO.	PRICE R.		NEW	P/R
			Ex.	Ja.		
VHPGP1A71L3-1	572 568 0153	31- 32	AG	DS	N	B
VHPGP2TC21//1	572 568 0107	20- 1	BE	GN		B
VHPGP3A38//-1	572 574 0040	6- 11	AH	DX		B
VHPLT1F67AF-1	595 574 0220	52- 75	AC	DJ		B
〃	595 574 0220	53- 72	AC	DJ		B
VHPLT9400E/-1	572 574 0310	54- 10	AK	EB		B
VHPPC814X1+-1	572 568 0154	50- 37	AD	DJ		B
VHPPC817D//-1	596 574 0016	50- 38	AD	DJ		B
VHPTLP624-1BV	572 574 0308	50- 39	AG	DX		B
VHVDSS-401M//	578 577 0027	50- 40	AH	DX		B
VHVTN07G101-1	595 577 0103	50- 42	AB	DJ		B
VHVTNR5V471K/	578 577 0026	50- 41	AD	DJ		B
VRD-HT2EY100J	595 581 0453	50- 43	AA	DD		C
VRD-HT2EY102J	507 581 5010	54- 11	AA	DD		C
VRD-HT2EY104J	505 581 5003	50- 44	AA	DD		C
〃	505 581 5003	55- 28	AA	DD		C
VRD-HT2EY111J	588 581 0061	54- 12	AA	DD		C
VRD-HT2EY124J	595 581 0454	50- 45	AA	DD		C
VRD-HT2EY151J	541 581 5470	54- 13	AA	DD		C
VRD-HT2EY164J	588 581 0069	50- 46	AA	DD		C
VRD-HT2EY183J	571 581 0415	50- 47	AA	DD		C
VRD-HT2EY204J	507 581 5013	50- 48	AA	DD		C
VRD-HT2EY224J	579 581 0158	50- 49	AA	DD		C
VRD-HT2EY242J	571 581 0369	55- 27	AA	DD		C
VRD-HT2EY300J	588 581 0088	50- 50	AA	DD		C
VRD-HT2EY302J	581 581 0003	54- 14	AA	DD		C
VRD-HT2EY303J	579 581 0123	50- 52	AA	DD		C
VRD-HT2EY471J	507 581 5017	50- 53	AA	DD		C
VRD-HT2EY472J	507 581 5018	50- 98	AA	DD		C
VRD-HT2EY473J	507 581 5019	54- 15	AA	DD		C
〃	507 581 5019	55- 38	AA	DD		C
VRD-HT2EY562J	595 581 0480	55- 29	AA	DD		C
VRD-HT2EY682J	571 581 0452	50- 55	AA	DD		C
〃	571 581 0452	54- 16	AA	DD		C
VRD-HT2EY751J	507 581 5045	49- 63	AA	DD		C
VRD-HT2EY910J	577 581 0025	50- 56	AA	DD		C
VRD-HT2EY911J	588 581 0035	54- 17	AA	DD		C
VRD-HT2HY471J	579 581 0125	49- 64	AA	DD		C
VRD-RC2EY103J	500 581 5014	56- 15	AA	DD		C
VRS-CY1JD270J	521 581 0007	51- 69	AA	DD		C
VRS-CZ1JD000J	521 581 0082	49- 65	AA	DD		C
〃	521 581 0082	50- 57	AA	DD		C
〃	521 581 0082	51- 70	AA	DD		C
〃	521 581 0082	52- 76	AA	DD		C
〃	521 581 0082	53- 73	AA	DD		C
〃	521 581 0082	58- 67	AA	DD		C
VRS-CZ1JD100J	567 581 0524	53- 74	AA	DD		C
〃	567 581 0524	58- 68	AA	DD		C
VRS-CZ1JD101J	521 581 0137	49- 67	AA	DD		C
〃	521 581 0137	51- 71	AA	DD		C
〃	521 581 0137	52- 77	AA	DD		C
〃	521 581 0137	53- 75	AA	DD		C
〃	521 581 0137	56- 16	AA	DD		C
VRS-CZ1JD102J	521 581 0093	49- 68	AA	DD		C
〃	521 581 0093	50- 58	AA	DD		C
〃	521 581 0093	51- 72	AA	DD		C
〃	521 581 0093	52- 78	AA	DD		C
〃	521 581 0093	53- 76	AA	DD		C
〃	521 581 0093	55- 30	AA	DD		C
〃	521 581 0093	58- 69	AA	DD		C
VRS-CZ1JD103F	521 581 0127	49- 69	AA	DD		C
〃	521 581 0127	51- 73	AA	DD		C
〃	521 581 0127	52- 79	AA	DD		C
VRS-CZ1JD103J	521 581 0085	49- 70	AA	DD		C
〃	521 581 0085	50- 59	AA	DD		C
〃	521 581 0085	51- 74	AA	DD		C
〃	521 581 0085	52- 80	AA	DD		C
〃	521 581 0085	53- 77	AA	DD		C
〃	521 581 0085	58- 70	AA	DD		C
VRS-CZ1JD104F	521 581 0253	51- 75	AA	DD		C
VRS-CZ1JD104J	521 581 0083	49- 71	AA	DD		C
〃	521 581 0083	51- 76	AA	DD		C
VRS-CZ1JD105J	521 581 0094	51- 77	AA	DD		C
〃	521 581 0094	52- 81	AA	DD		C
〃	521 581 0094	53- 78	AA	DD		C
〃	521 581 0094	58- 71	AA	DD		C
VRS-CZ1JD113F	567 581 0525	51- 78	AA	DD		C
VRS-CZ1JD113J	521 581 0095	50- 60	AA	DD		C
VRS-CZ1JD121J	567 581 0526	53- 79	AA	DD		C
VRS-CZ1JD122J	521 581 0096	52- 83	AA	DD		C
VRS-CZ1JD123J	521 581 0097	49- 72	AA	DD		C

PARTS CODE	JAPAN ONLY ORDER CODE	NO.	PRICE R.		NEW	P/R
			Ex.	Ja.		
VRS-CZ1JD123J	521 581 0097	52- 84	AA	DD		C
VRS-CZ1JD133F	572 581 2079	49- 73	AA	DD		C
VRS-CZ1JD133J	572 581 2155	52- 85	AA	DD		C
VRS-CZ1JD151J	567 581 0527	50- 99	AA	DD		C
〃	567 581 0527	53- 80	AA	DD		C
VRS-CZ1JD152J	521 581 0175	49- 74	AA	DD		C
〃	521 581 0175	52- 86	AA	DD		C
〃	521 581 0175	53- 81	AA	DD		C
〃	521 581 0175	58- 73	AA	DD		C
VRS-CZ1JD153F	521 581 0290	49- 75	AB	DD		C
VRS-CZ1JD153J	567 581 0528	50- 61	AA	DD		C
VRS-CZ1JD162J	578 581 0333	51- 79	AA	DD		C
VRS-CZ1JD182J	521 581 0189	53- 82	AA	DD		C
VRS-CZ1JD183J	521 581 0102	49- 76	AA	DD		C
〃	521 581 0102	50- 62	AA	DD		C
VRS-CZ1JD201J	521 581 0254	51- 80	AA	DD		C
〃	521 581 0254	58- 74	AA	DD		C
VRS-CZ1JD202J	567 581 0695	51- 81	AA	DD		C
〃	567 581 0695	53- 83	AA	DD		C
VRS-CZ1JD203F	521 581 0131	52- 88	AA	DD		C
VRS-CZ1JD203J	567 581 0530	49- 77	AA	DD		C
〃	567 581 0530	50- 63	AA	DD		C
〃	567 581 0530	52- 89	AA	DD		C
VRS-CZ1JD220J	567 581 0532	52- 90	AA	DD		C
〃	567 581 0532	58- 75	AA	DD		C
VRS-CZ1JD221J	567 581 0533	51- 82	AA	DD		C
〃	567 581 0533	52- 91	AA	DD		C
VRS-CZ1JD222J	567 581 0534	49- 78	AA	DD		C
〃	567 581 0534	50-100	AA	DD		C
VRS-CZ1JD223J	521 581 0104	50- 64	AA	DD		C
VRS-CZ1JD242J	521 581 0219	52- 92	AA	DD		C
〃	521 581 0219	55- 32	AA	DD		C
VRS-CZ1JD243J	521 581 0190	50- 65	AA	DD		C
VRS-CZ1JD271J	572 581 2153	53- 84	AA	DD		C
〃	572 581 2153	55- 33	AA	DD		C
VRS-CZ1JD272J	567 581 0634	50- 66	AA	DD		C
〃	567 581 0634	51- 84	AA	DD		C
〃	567 581 0634	53- 85	AA	DD		C
VRS-CZ1JD273F	572 581 2080	49- 79	AA	DD		C
〃	572 581 2080	51- 85	AA	DD		C
VRS-CZ1JD273J	572 581 2081	49- 80	AA	DD		C
〃	572 581 2081	50- 67	AA	DD		C
VRS-CZ1JD302J	572 581 2072	49- 81	AA	DD		C
VRS-CZ1JD303J	572 581 2074	51- 86	AA	DD		C
〃	572 581 2074	52- 93	AA	DD		C
VRS-CZ1JD330J	521 581 0202	49- 82	AA	DD		C
〃	521 581 0202	51- 87	AA	DD		C
〃	521 581 0202	52- 94	AA	DD		C
〃	521 581 0202	58- 76	AA	DD		C
VRS-CZ1JD331J	567 581 0537	50-101	AA	DD		C
〃	567 581 0537	52- 95	AA	DD		C
VRS-CZ1JD332F	521 581 0193	52- 96	AA	DD		C
VRS-CZ1JD332J	521 581 0107	50- 68	AA	DD		C
〃	521 581 0107	58- 77	AA	DD		C
VRS-CZ1JD333J	521 581 0124	49- 83	AA	DD		C
〃	521 581 0124	53- 86	AA	DD		C
VRS-CZ1JD362J	521 581 0284	52- 97	AA	DD		C
VRS-CZ1JD363J	567 581 0616	49- 84	AA	DD		C
〃	567 581 0616	50-102	AA	DD		C
VRS-CZ1JD391J	521 581 0203	51- 88	AA	DD		C
VRS-CZ1JD393F	572 581 2082	49- 85	AA	DD		C
VRS-CZ1JD393J	521 581 0285	49- 86	AA	DD		C
〃	521 581 0285	50-103	AA	DD		C
VRS-CZ1JD470J	521 581 0170	52- 98	AA	DD		C
〃	521 581 0170	53- 87	AA	DD		C
〃	521 581 0170	58- 78	AA	DD		C
VRS-CZ1JD471J	567 581 0617	49- 87	AA	DD		C
〃	567 581 0617	52- 99	AA	DD		C
〃	567 581 0617	53- 88	AA	DD		C
VRS-CZ1JD472F	572 581 2062	52-100	AA	DD		C
VRS-CZ1JD472J	521 581 0088	49- 88	AA	DD		C
〃	521 581 0088	50-104	AA	DD		C
〃	521 581 0088	51- 89	AA	DD		C
〃	521 581 0088	52-101	AA	DD		C
〃	521 581 0088	53- 89	AA	DD		C
VRS-CZ1JD473J	521 581 0109	49- 89	AA	DD		C
〃	521 581 0109	51- 90	AA	DD		C
〃	521 581 0109	52-102	AA	DD		C
〃	521 581 0109	53- 90	AA	DD		C
〃	521 581 0109	55- 34	AA	DD		C
VRS-CZ1JD512J	578 581 0332	50- 70	AA	DD		C

PARTS CODE	JAPAN ONLY ORDER CODE	NO.	PRICE R.		NEW	P/R
			Ex.	Ja.		
VRS-CZ1JD513J	572 581 2083	49- 90	AA	DD		C
〃	572 581 2083	50- 71	AA	DD		C
VRS-CZ1JD560J	572 581 2084	49- 91	AA	DD		C
VRS-CZ1JD621J	572 581 2064	50- 72	AA	DD		C
VRS-CZ1JD622J	578 581 0317	51- 91	AA	DD		C
VRS-CZ1JD680J	572 581 2065	53- 91	AA	DD		C
VRS-CZ1JD682J	521 581 0226	49- 92	AA	DD		C
VRS-CZ1JD683J	567 581 0543	49- 93	AA	DD		C
〃	567 581 0543	50-105	AA	DD		C
VRS-CZ1JD753J	521 581 0198	49- 94	AA	DD		C
VRS-CZ1JD821J	572 581 2073	50-106	AA	DD		C
〃	572 581 2073	51- 93	AA	DD		C
VRS-CZ1JD822J	572 581 2066	50-107	AA	DD		C
VRS-CZ1JD823J	572 581 2067	58- 79	AA	DD		C
VRS-CZ1JD912J	572 581 2086	49- 95	AA	DD		C
VRS-CZ1JD913J	521 581 0199	49- 96	AA	DD		C
VRS-HT3DA1R0J	567 581 0073	55- 35	AB	DD		C
VRS-HT3DAR51J	572 581 2234	52-105	AC	DD		C
VRS-RA3AA202J	572 581 1845	50- 74	AB	DD		C
VRS-RA3AA472J	572 581 1846	50-108	AB	DD		C
VRS-TP2BD1R0J	585 581 0486	51- 94	AA	DD		C
VS2SA1576A/-1	521 576 0072	51- 96	AB	DJ		B
VS2SA1807-P-1	595 576 0368	50- 76	AE	DS		B
VS2SB1197//-1	571 576 0349	52-106	AC	DJ		B
VS2SB1198K/-1	572 576 0510	53- 92	AC	DJ		B
VS2SC1740SR-1	595 576 0048	54- 18	AB	DD		B
VS2SC2412K/-1	500 576 5005	51- 97	AB	DD		B
〃	500 576 5005	53- 93	AB	DD		B
VS2SC2412KS-1	507 576 5010	50- 77	AB	DD		B
VS2SC3415-P-1	595 576 0378	50- 78	AP	EQ		B
VS2SD1266A0-1	572 576 0505	50- 79	AF	DS		B
VS2SD1857A+-1	572 576 0604	56- 17	AB	DJ		B
VS2SD592A//-1	572 576 0462	49-100	AE	DJ		B
VS2SD592A-S-1	595 576 0471	50- 80	AK	DX		B
VS2SJ243///-1	521 576 0057	53- 94	AD	DJ		B
VSDTA114EUA-1	594 576 0224	49- 97	AC	DJ		B
〃	594 576 0224	52-107	AC	DJ		B
VSDTA114YUA-1	596 576 0538	51- 98	AC	DJ		B
VSDTA144EUA-1	596 576 0539	51- 99	AC	DJ		B
VSDTC114EK/-1	595 576 0038	58- 80	AB	DD		B
VSDTC114EUA-1	594 576 0225	49- 98	AC	DJ		B
VSDTC114YK/-1	507 576 5005	58- 81	AC	ZZ		B
VSDTC114YUA-1	594 576 0248	51-100	AB	DJ		B
〃	594 576 0248	52-108	AB	DJ		B
〃	594 576 0248	53- 95	AB	DJ		B
VSDTC143ZKA-1	594 576 0231	50- 75	AC	DJ		B
VSDTC363EU+-1	572 576 0582	49- 99	AC	DJ		B
VVLLM065HB1-1	572 567 0010	4- 7	CB	TX		B
【X】						
XBBS230P08000	572 970 2308	22- 1	AA	DD		C
XBBSD30P04000	541 970 5027	20- 34	AA	DD		C
XBBSD30P06000	541 970 5028	20- 2	AA	DD		C
〃	541 970 5028	58- 82	AA	DD		C
XBBSD30P08000	571 970 0241	30- 27	AA	DD		C
XBBSD40P06000	572 970 0626	7- 3	AA	DD		C
XBBSD40P10000	577 970 0051	6- 16	AA	DD		C
XBBSD40P14000	572 970 1400	6- 12	AA	DD		C
XBBSE40P06000	572 970 1465	36- 31	AA	DD		C
XBPSD30P06KS0	541 970 0016	24- 15	AA	DD		C
〃	541 970 0016	3- 4	AA	DD		C
XBPSD30P08K00	541 970 0014	31- 30	AA	DD		C
XBPSD30P08KS0	541 970 1097	37- 21	AA	DD		C
XBPSD30P12XS0	572 970 2567	8- 4	AA	DD	N	C
XBPSD40P06K00	541 970 1038	33- 7	AA	DD		C
〃	541 970 1038	37- 9	AA	DD		C
XBPSD40P08K00	541 970 1106	31- 25	AA	DD		C
〃	541 970 1106	31- 54	AA	DD		C
XBPSD40P40XS0	572 970 1504	37- 10	AA	DD		C
XBPSE26P08000	572 970 2332	37- 42	AA	DD		C
XBPSE30P06000	541 970 0020	38- 4	AA	DD		C
XBTSE40P06000	572 970 0638	2- 24	AA	DD		C
XEBSD30P06000	578 970 0102	13- 28	AA	DD		C
〃	578 970 0102	19- 23	AA	DD		C
〃	578 970 0102	20- 7	AA	DD		C
〃	578 970 0102	24- 14	AA	DD		C
〃	578 970 0102	25- 38	AA	DD		C
XEBSD30P08000	578 970 0105	17- 26	AA	DD		C
〃	578 970 0105	18- 17	AA	DD		C
〃	578 970 0105	19- 30	AA	DD		C
〃	578 970 0105	20- 11	AA	DD		C
〃	578 970 0105	22- 17	AA	DD		C

PARTS CODE	JAPAN ONLY ORDER CODE	NO.	PRICE R.		NEW	P/R
			Ex.	Ja.		
XEBSD30P08000	578 970 0105	24- 4	AA	DD		C
〃	578 970 0105	25- 24	AA	DD		C
〃	578 970 0105	28- 39	AA	DD		C
〃	578 970 0105	29- 23	AA	DD		C
〃	578 970 0105	3- 13	AA	DD		C
〃	578 970 0105	31- 49	AA	DD		C
〃	578 970 0105	8- 2	AA	DD		C
XEBSD30P10000	578 970 0106	20- 36	AA	DD		C
〃	578 970 0106	32- 18	AA	DD		C
XEBSD30P12000	572 970 0571	24- 53	AA	DD		C
XEBSD30P16000	578 970 0107	17- 5	AA	DD		C
〃	578 970 0107	31- 3	AA	DD		C
XEBSD40P08000	572 970 0587	10- 21	AA	DD		C
〃	572 970 0587	11- 24	AA	DD		C
〃	572 970 0587	11- 31	AA	DD		C
〃	572 970 0587	20- 40	AA	DD		C
〃	572 970 0587	23- 7	AA	DD		C
〃	572 970 0587	27- 31	AA	DD		C
〃	572 970 0587	30- 31	AA	DD		C
〃	572 970 0587	32- 11	AA	DD		C
〃	572 970 0587	32- 19	AA	DD		C
〃	572 970 0587	33- 13	AA	DD		C
XEBSD40P10000	572 970 0588	22- 22	AA	DD		C
〃	572 970 0588	2- 27	AA	DD		C
XEBSD40P30000	572 970 1429	1- 28	AA	DD		C
XEBSD40P35000	572 970 2564	33- 5	AC	DD	N	C
XEBSE30P06000	578 970 0082	28- 13	AA	DD		C
〃	578 970 0082	29- 3	AA	DD		C
XEBSE30P08000	595 970 0121	1- 25	AA	DD		C
〃	595 970 0121	13- 13	AA	DD		C
〃	595 970 0121	16- 29	AA	DD		C
〃	595 970 0121	16- 5	AA	DD		C
XEBSE30P10000	595 970 0122	37- 8	AA	DD		C
XEBSE30P12000	595 970 0345	37- 7	AA	DD		C
XEBSE40P08000	572 970 1505	10- 2	AA	DD		C
〃	572 970 1505	1- 4	AA	DD		C
〃	572 970 1505	16- 14	AA	DD		C
〃	572 970 1505	17- 19	AA	DD		C
〃	572 970 1505	2- 25	AA	DD		C
〃	572 970 1505	28- 35	AA	DD		C
〃	572 970 1505	4- 2	AA	DD		C
XEBSE40P10000	572 970 0575	13- 2	AA	DD		C
〃	572 970 0575	14- 22	AA	DD		C
〃	572 970 0575	15- 13	AA	DD		C
XEPSD30P05000	578 970 0091	3- 11	AA	DD		C
XEPSD30P06X00	595 970 0301	13- 17	AA	DD		C
XEPSD30P08000	595 970 0137	4- 4	AA	DD		C
XEPSD30P08X00	595 970 0136	20- 51	AA	DD		C
XEPSD40P06000	578 970 0083	7- 28	AA	DD		C
XEPSD40P40000	572 970 2572	31- 43	AC	DD	N	C
XHBS230P06000	572 970 1971	24- 17	AA	DD		C
〃	572 970 1971	25- 40	AA	DD		C
XHBS230P08000	572 970 2002	24- 3	AA	DD		C
XHBS240P08000	572 970 2004	24- 47	AB	DD		C
XHBSD30P04000	578 970 0072	24- 29	AA	DD		C
〃	578 970 0072	25- 21	AA	DD		C
〃	578 970 0072	6- 5	AA	DD		C
XHBSD30P05000	595 970 0162	38- 10	AA	DD		C
XHBSD30P06000	541 970 1017	20- 42	AA	DD		C
〃	541 970 1017	21- 15	AA	DD		C
〃	541 970 1017	23- 3	AA	DD		C
〃	541 970 1017	24- 19	AA	DD		C
〃	541 970 1017	24- 46	AA	DD		C
〃	541 970 1017	25- 31	AA	DD		C
〃	541 970 1017	26- 4	AA	DD		C
〃	541 970 1017	28- 2	AA	DD		C
〃	541 970 1017	30- 18	AA	DD		C
〃	541 970 1017	38- 1	AA	DD		C
〃	541 970 1017	6- 20	AA	DD		C
〃	541 970 1017	6- 7	AA	DD		C
〃	541 970 1017	7- 18	AA	DD		C
XHBSD30P08000	578 970 0060	38- 15	AA	DD		C
XHBSD30P08KS0	572 970 2565	31- 55	AB	DD	N	C
〃	572 970 2565	6- 2	AB	DD	N	C
〃	572 970 2565	9- 4	AB	DD	N	C
XHBSD30P10000	572 970 0530	19- 28	AA	DD		C
〃	572 970 0530	24- 31	AA	DD		C
〃	572 970 0530	25- 22	AA	DD		C
XHBSD30P14000	572 970 1532	30- 2	AA	DD		C
XHBSD40P06000	578 970 0073	29- 20	AA	DD		C
〃	578 970 0073	7- 30	AA	DD		C

PARTS CODE	JAPAN ONLY ORDER CODE	NO.	PRICE R.		NEW	P/R
			Ex.	Ja.		
XHBSE30P04000	595 970 0160	34- 20	AA	DD		C
XHBSE30P06000	578 970 0070	11- 3	AA	DD		C
〃	578 970 0070	1- 31	AA	DD		C
〃	578 970 0070	31- 18	AA	DD		C
〃	578 970 0070	34- 6	AA	DD		C
〃	578 970 0070	37- 13	AA	DD		C
〃	578 970 0070	38- 27	AA	DD		C
XHBSE30P08000	595 970 0163	11- 30	AA	DD		C
〃	595 970 0163	1- 35	AA	DD		C
〃	595 970 0163	20- 13	AA	DD		C
〃	595 970 0163	2- 22	AA	DD		C
〃	595 970 0163	29- 18	AA	DD		C
〃	595 970 0163	30- 19	AA	DD		C
〃	595 970 0163	31- 36	AA	DD		C
〃	595 970 0163	31- 9	AA	DD		C
〃	595 970 0163	34- 19	AA	DD		C
〃	595 970 0163	6- 6	AA	DD		C
XHBSE40P05000	572 970 2023	37- 32	AB	DD		C
XHBSE40P08000	572 970 0539	11- 29	AA	DD		C
〃	572 970 0539	11- 32	AA	DD		C
〃	572 970 0539	12- 26	AA	DD		C
〃	572 970 0539	1- 24	AA	DD		C
〃	572 970 0539	12- 8	AA	DD		C
〃	572 970 0539	13- 29	AA	DD		C
〃	572 970 0539	17- 45	AA	DD		C
〃	572 970 0539	2- 23	AA	DD		C
〃	572 970 0539	23- 28	AA	DD		C
〃	572 970 0539	26- 2	AA	DD		C
〃	572 970 0539	27- 3	AA	DD		C
〃	572 970 0539	28- 38	AA	DD		C
〃	572 970 0539	29- 15	AA	DD		C
〃	572 970 0539	30- 22	AA	DD		C
〃	572 970 0539	31- 19	AA	DD		C
〃	572 970 0539	33- 8	AA	DD		C
〃	572 970 0539	37- 46	AA	DD		C
〃	572 970 0539	6- 21	AA	DD		C
〃	572 970 0539	9- 1	AA	DD		C
XHBSE40P10000	595 970 0167	37- 47	AA	DD		C
XHBSE40P12000	572 970 1585	16- 17	AA	DD		C
XHSSE30P10000	594 970 0122	4- 15	AA	DD		C
XJBSD40P08000	572 970 1466	5- 10	AA	DD		C
XJBSD40P12000	572 970 0570	5- 2	AA	DD		C
XJBSE40P12000	572 970 2568	1- 2	AA	DD	N	C
XRESP30-06000	541 399 5002	3- 2	AA	DD		C
XRESP40-05000	572 399 0053	7- 34	AA	DD		C
XRESP40-06000	509 399 5001	11- 9	AA	DD		C
〃	509 399 5001	12- 12	AA	DD		C
〃	509 399 5001	14- 21	AA	DD		C
〃	509 399 5001	15- 20	AA	DD		C
〃	509 399 5001	19- 6	AA	DD		C
〃	509 399 5001	20- 20	AA	DD		C
〃	509 399 5001	21- 16	AA	DD		C
〃	509 399 5001	28- 6	AA	DD		C
XRESP50-06000	572 399 0063	11- 10	AA	DD		C
〃	572 399 0063	12- 15	AA	DD		C
〃	572 399 0063	14- 8	AA	DD		C
〃	572 399 0063	15- 21	AA	DD		C
〃	572 399 0063	17- 40	AA	DD		C
〃	572 399 0063	19- 7	AA	DD		C
〃	572 399 0063	20- 32	AA	DD		C
〃	572 399 0063	25- 3	AA	DD		C
〃	572 399 0063	27- 18	AA	DD		C
〃	572 399 0063	28- 19	AA	DD		C
XRESP70-08000	571 399 0027	10- 31	AA	DD		C
〃	571 399 0027	12- 11	AA	DD		C
〃	571 399 0027	15- 4	AA	DD		C
〃	571 399 0027	16- 21	AA	DD		C
〃	571 399 0027	17- 9	AA	DD		C
〃	571 399 0027	18- 3	AA	DD		C
〃	571 399 0027	21- 2	AA	DD		C
〃	571 399 0027	24- 35	AA	DD		C
〃	571 399 0027	26- 7	AA	DD		C
〃	571 399 0027	27- 6	AA	DD		C
〃	571 399 0027	7- 14	AA	DD		C
XRESP80-08000	571 399 0029	23- 18	AA	DD		C
XWHSD30-05080	500 990 0026	24- 28	AA	DD		C
〃	500 990 0026	25- 20	AA	DD		C
XWHSD30-08100	505 990 5001	21- 11	AA	DD		C
XWHSD40-08100	541 990 0043	30- 21	AA	DD		C
XWHSE30-05080	572 990 0529	37- 44	AA	DD		C

PARTS CODE	JAPAN ONLY ORDER CODE	NO.	PRICE R.		NEW	P/R
			Ex.	Ja.		
【0】						
0CW023100FZWS	572 970 2545	42- 15	AB	DJ	N	C
〃	572 970 2545	47- 13	AB	DJ	N	C
0CW030040FZWS	572 970 0889	43- 45	AA	DD		C
〃	572 970 0889	47- 26	AA	DD		C
0CW030060FZBP	572 970 0946	45- 6	AA	DD		C
0CW030060FZSW	572 970 0951	41- 45	AA	DD		C
〃	572 970 0951	47- 28	AA	DD		C
0CW030060FZTP	572 970 0952	41- 24	AA	DD		C
〃	572 970 0952	43- 31	AA	DD		C
〃	572 970 0952	44- 25	AA	DD		C
〃	572 970 0952	47- 24	AA	DD		C
0CW030060FZWS	572 970 0953	39- 29	AA	DD		C
〃	572 970 0953	41- 56	AA	DD		C
〃	572 970 0953	45- 30	AA	DD		C
〃	572 970 0953	47- 19	AA	DD		C
0CW030080FNWS	572 970 1975	41- 12	AA	DJ		C
0CW030080FZBi	572 970 1276	43- 14	AA	DJ		C
0CW030080FZWS	572 970 0960	41- 28	AA	DD		C
〃	572 970 0960	42- 3	AA	DD		C
〃	572 970 0960	45- 38	AA	DD		C
0CW040060FNBB	572 970 1625	41- 29	AB	DJ		C
0CW040060FNBi	572 970 0988	45- 22	AA	DD		C
0CW040060FZBP	572 970 1645	44- 35	AB	DJ		C
0CW040060FZTP	572 970 1002	46- 7	AA	DD		C
〃	572 970 1002	47- 21	AA	DD		C
0CW040060FZWS	572 970 1003	44- 5	AA	DD		C
0CW040080FNBi	572 970 1209	39- 17	AA	DD		C
〃	572 970 1209	45- 13	AA	DD		C
0CW040080FZSW	572 970 1211	46- 3	AA	DD		C
0CW040080FZTP	572 970 1023	39- 27	AA	DD		C
〃	572 970 1023	42- 6	AA	DD		C
0CW040080FZWS	572 970 1024	42- 11	AA	DD		C
〃	572 970 1024	46- 1	AA	DD		C
0CW040100FNiT	572 970 2547	39- 3	AB	DJ	N	C
0CW040120FZiT	572 970 2548	47- 5	AB	DJ	N	C
0CW2078P023B/	572 970 1392	42- 31	AC	DJ		C
〃	572 970 1392	45- 21	AC	DJ		C
0CW2078P086B/	572 970 1216	43- 27	AB	DD		C
〃	572 970 1216	45- 29	AB	DD		C
0CW2078P652B/	572 203 1129	43- 37	AE	DS	N	C
0CW2129P188A/	572 208 0004	43- 32	AD	DJ	N	C
0CW2158P322A/	572 970 2549	39- 19	AC	DJ	N	C
0CW2164P142A/	572 214 1313	45- 2	AE	DS		C
0CW2164P330A/	572 970 1544	41- 14	AB	DJ		C
〃	572 970 1544	43- 12	AB	DJ		C
0CW2164P340A/	572 970 1224	42- 5	AA	DD		C
0CW2164P340A1	572 970 2569	47- 8	AB	DJ	N	C
0CW2166P034B/	572 317 0005	40- 37	AC	DJ		C
0CW2185P357A/	572 970 2015	39- 14	AA	DJ		C
〃	572 970 2015	41- 6	AA	DJ		C
〃	572 970 2015	43- 49	AA	DJ		C
〃	572 970 2015	44- 16	AA	DJ		C
〃	572 970 2015	47- 9	AA	DJ		C
0CW2198P305B/	572 273 0024	45- 35	AH	DX	N	C
0CW2198P374A/	572 990 0541	45- 14	AC	DJ	N	C
0CW2205P025A/	572 413 0782	45- 17	AD	DJ	N	C
0CW2205P147A/	572 258 4181	45- 16	AG	DX	N	C
0CW2205P351A/	572 287 2343	45- 19	AU	EZ	N	C
0CW2205P360A/	572 258 4077	45- 3	AD	DJ	N	C
0CW2214P044A/	572 345 3869	45- 15	AF	DS	N	C
0CW2214P116B/	572 200 1458	47- 1	AE	DJ	N	C
0CW2214P128B/	572 203 1130	39- 13	AK	DX	N	C
0CW2214P157B/	572 258 4078	45- 36	AK	DX	N	C
0CW2214P393A/	572 373 0143	47- 27	AG	DX	N	C
0CW2214P455C/	572 258 4079	41- 23	AE	DS	N	C
〃	572 258 4079	43- 13	AE	DS	N	C
0CW2214P520B/	572 214 2314	45- 28	AU	EZ	N	C
0CW2214P575A/	572 271 0835	45- 37	BR	LP	N	A
0CW2225P312A/	572 272 0807	40- 19	AD	DJ	N	C
0CW2240P835A/	572 568 0152	41- 27	AT	EZ	N	B
〃	572 568 0152	43- 25	AT	EZ	N	B
0CW2247P326A/	572 272 0808	41- 15	AF	DS	N	C
0CW2252P620C/	572 208 0005	40- 16	AD	DJ	N	C
〃	572 208 0005	41- 19	AD	DJ	N	C
〃	572 208 0005	43- 40	AD	DJ	N	C
0CW2254P058A/	572 248 1448	41- 43	AE	DJ	N	C
0CW2254P338A/	572 214 2315	41- 44	AC	DJ	N	C
0CW2254P494A/	572 970 2551	40- 2	AB	DJ	N	C
〃	572 970 2551	41- 22	AB	DJ	N	C
〃	572 970 2551	44- 19	AB	DJ	N	C

PARTS CODE	JAPAN ONLY ORDER CODE	NO.	PRICE R.		NEW	P/R
			Ex.	Ja.		
0CW2260P002A/	572 281 2303	40- 43	AE	DJ	N	C
0CW2260P457//	572 403 5314	44- 40	AP	EQ	N	C
0CW2260P458//	572 403 5315	44- 41	AP	EQ	N	C
0CW2261P023E/	572 290 2877	40- 27	AD	DJ	N	C
0CW2261P055A/	572 284 0861	40- 25	AC	DJ	N	C
0CW2268K040B/	572 203 1131	41- 42	AG	DX	N	C
0CW2268K041A/	572 203 1132	41- 13	AG	DX	N	C
0CW2268K522A/	572 630 1110	44- 6	BL	HL	N	B
0CW2268P005A/	572 273 0025	44- 15	AD	DJ	N	C
0CW2268P056//	572 240 0464	40- 11	AE	DJ	N	C
0CW2268P057//	572 240 0465	40- 3	AE	DJ	N	C
0CW2268P059//	572 284 0863	45- 18	AE	DJ	N	C
0CW2268P064//	572 284 0864	42- 17	AG	DX	N	C
0CW2268P065//	572 281 2304	42- 18	AG	DX	N	C
0CW2268P066//	572 281 2305	42- 25	AH	DX	N	C
0CW2268P069//	572 273 0026	46- 11	AD	DJ	N	C
0CW2268P071//	572 273 0027	41- 8	AE	DJ	N	C
0CW2268P073//	572 281 2306	41- 21	AD	DJ	N	C
0CW2268P076//	572 217 0129	46- 12	AD	DJ	N	C
//	572 217 0129	47- 37	AD	DJ	N	C
0CW2268P076B/	572 217 0130	40- 51	AD	DJ	N	C
0CW2268P078//	572 284 0865	43- 17	AE	DS	N	C
0CW2268P083//	572 284 0866	42- 4	AF	DS	N	C
0CW2268P084//	572 203 1133	39- 5	AF	DS	N	C
0CW2268P085//	572 281 2307	39- 10	AE	DJ	N	C
0CW2268P110//	572 505 0013	45- 25	AH	DX	N	C
0CW2268P145//	572 258 4080	47- 23	AG	DS	N	C
0CW2268P146//	572 231 0584	45- 31	AP	EQ	N	C
0CW2268P170//	572 258 4081	39- 11	AE	DS	N	C
0CW2268P217//	572 290 2878	42- 21	AK	EB	N	C
0CW2268P303//	572 287 2344	41- 48	BA	FX	N	C
0CW2268P335//	572 258 4082	42- 33	AD	DJ	N	C
0CW2268P336//	572 403 5196	41- 47	AD	DJ	N	C
0CW2268P344//	572 316 0417	42- 24	AP	EQ	N	C
0CW2268P352//	572 258 4083	43- 16	AD	DJ	N	C
0CW2268P354//	572 258 4084	41- 16	AG	DX	N	C
0CW2268P360//	572 258 4085	44- 3	AD	DJ	N	C
0CW2268P401//	572 345 3870	41- 50	AG	DS	N	C
0CW2268P402//	572 345 3871	46- 2	AK	DX	N	C
0CW2269K001//	572 505 0015	47- 22	AH	DX	N	C
0CW2269K008//	572 505 0016	47- 31	AK	EB	N	C
0CW2269K011//	572 505 0017	42- 32	AH	DX	N	C
0CW2269K012//	572 505 0018	46- 10	AG	DX	N	C
0CW2269K013//	572 505 0019	42- 8	AU	EZ	N	C
0CW2269K016//	572 505 0020	44- 33	AF	DS	N	C
0CW2269K025F/	572 246 0439	47- 29	BD	GJ	N	C
0CW2269K026G/	572 246 0440	47- 17	BD	GN	N	C
0CW2269K032//	572 685 2170	39- 12	CB	TZ	N	E
0CW2269K042B/	572 400 0819	41- 37	AF	DX	N	C
0CW2269K047//	572 110 1283	41- 9	AR	EQ	N	B
0CW2269K061//	572 290 2879	40- 31	AL	EB	N	C
0CW2269K062B/	572 345 3982	40- 45	AU	EZ	N	E
0CW2269K064//	572 226 0685	39-501	BG	GT	N	D
0CW2269K066//	572 685 2171	39- 28	BY	TF	N	D
0CW2269K094C/	572 214 2348	41- 3	AZ	FX	N	B
0CW2269K202//	572 684 3985	47- 3	BZ	TF	N	E
0CW2269K207//	572 521 0236	39- 25	AH	DX	N	E
0CW2269K221//	572 542 2223	48- 3	AM	EG	N	C
0CW2269K222B/	572 542 2315	48- 9	AG	DX	N	C
0CW2269K223B/	572 542 2316	48- 2	AL	EB	N	C
0CW2269K224//	572 542 2226	48- 11	AL	EB	N	C
0CW2269K225B/	572 542 2317	48- 1	AP	EQ	N	C
0CW2269K230//	572 542 2228	48- 6	AK	EB	N	C
0CW2269K231//	572 542 2229	48- 10	AK	DX	N	C
0CW2269K232//	572 542 2230	39- 15	AY	FQ	N	B
0CW2269K234B/	572 542 2318	48- 7	AY	FQ	N	C
0CW2269K240//	572 573 2818	47- 4	AX	FG	N	B
0CW2269K241B/	572 630 1132	42- 12	BL	HL	N	B
0CW2269K242B/	572 630 1133	46- 4	BM	HV	N	B
0CW2269K243//		48- 8	BL	HL	N	C
0CW2269P001//	572 210 1216	47- 2	BP	LP	N	D
0CW2269P002//	572 110 1284	39- 23	AX	FQ	N	C
0CW2269P003//	572 110 1285	39- 16	BA	FX	N	C
0CW2269P004//	572 226 0686	39- 4	BB	GD	N	C
0CW2269P005//	572 345 3873	44- 12	AP	EQ	N	C
0CW2269P006//	572 110 1286	44- 8	AW	FG	N	C
0CW2269P007//	572 110 1287	40- 13	AZ	FQ	N	D
0CW2269P009//	572 110 1288	39- 18	AP	EQ	N	C
0CW2269P010//	572 345 3874	41- 1	AS	EQ	N	C
0CW2269P011//	572 345 3875	41- 2	AQ	EQ	N	C
0CW2269P012A/	572 345 3930	41- 55	AM	EG	N	C

PARTS CODE	JAPAN ONLY ORDER CODE	NO.	PRICE R.		NEW	P/R
			Ex.	Ja.		
0CW2269P013//	572 345 3931	43- 52	AQ	EQ	N	C
0CW2269P014C/	572 345 3983	43- 26	AW	FG	N	C
0CW2269P015//	572 110 1289	43- 23	AG	DS	N	C
0CW2269P016//	572 248 1449	43- 34	AD	DJ	N	C
0CW2269P017//	572 248 1450	43- 10	AE	DJ	N	C
0CW2269P018//	572 110 1290	44- 26	AQ	EQ	N	C
0CW2269P020//	572 284 0867	47- 36	AD	DJ	N	C
0CW2269P022//	572 214 2316	45- 24	AF	DS	N	C
0CW2269P025//	572 214 2317	45- 5	AG	DS	N	C
0CW2269P026//	572 214 2318	45- 23	AF	DS	N	C
0CW2269P029//	572 214 2319	45- 4	AG	DS	N	C
0CW2269P038//	572 214 2320	41- 46	AE	DS	N	C
0CW2269P052//	572 230 0534	40- 18	AD	DJ	N	C
0CW2269P053//	572 248 1451	40- 49	AE	DS	N	C
0CW2269P054D/	572 221 8356	40- 6	AE	DS	N	C
0CW2269P055//	572 248 1452	42- 1	AE	DS	N	C
0CW2269P056//	572 273 0028	42- 30	AD	DJ	N	C
0CW2269P057//	572 284 0868	42- 23	AE	DS	N	C
0CW2269P059//	572 248 1453	43- 39	AE	DJ	N	C
0CW2269P060//	572 248 1454	44- 21	AE	DJ	N	C
0CW2269P061E/	572 240 0489	40- 30	AG	DX	N	C
0CW2269P062//	572 240 0467	40- 36	AN	EG	N	C
0CW2269P065//	572 110 1291	41- 4	AE	DS	N	C
0CW2269P066//	572 214 2321	41- 7	AF	DS	N	C
0CW2269P068//	572 345 3877	39- 1	AK	DX	N	C
0CW2269P069//	572 345 3878	39- 6	AK	DX	N	C
0CW2269P071D/	572 110 1308	40- 50	AH	DX	N	C
0CW2269P077//	572 248 1455	39- 7	AL	EB	N	C
0CW2269P099A/	572 284 0875	45- 9	AD	DJ	N	C
0CW2269P104//	572 203 1134	44- 18	AF	DS	N	C
0CW2269P105//	572 427 1661	43- 21	AH	DX	N	C
0CW2269P106//	572 427 1662	43- 22	AF	DS	N	C
0CW2269P107//	572 203 1135	43- 33	AK	DX	N	C
0CW2269P108//	572 203 1136	47- 15	AH	DX	N	C
0CW2269P109//	572 345 3879	41- 33	AT	EZ	N	C
0CW2269P110//	572 203 1137	44- 24	AP	EQ	N	C
0CW2269P111//	572 203 1138	44- 2	AN	EG	N	C
0CW2269P112//	572 203 1139	44- 20	AF	DS	N	C
0CW2269P114//	572 203 1140	46- 8	AQ	EQ	N	C
0CW2269P115//	572 203 1141	41- 30	AL	EB	N	C
0CW2269P116//	572 203 1142	47- 25	AH	DX	N	C
0CW2269P119//	572 221 8106	45- 12	AQ	EQ	N	C
0CW2269P120//	572 221 8107	45- 11	AP	EQ	N	C
0CW2269P123//	572 203 1143	45- 20	AH	DX	N	C
0CW2269P128//	572 258 4086	44- 14	AE	DS	N	C
0CW2269P132//	572 203 1144	40- 12	AE	DS	N	C
0CW2269P133//	572 203 1145	40- 1	AG	DX	N	C
0CW2269P139//	572 203 1146	40- 8	AE	DS	N	C
0CW2269P142//	572 203 1147	43- 44	AF	DS	N	C
0CW2269P145//	572 231 0585	47- 40	AW	FG	N	C
0CW2269P146//	572 231 0586	47- 14	AN	EG	N	C
0CW2269P147//	572 248 1456	47- 18	AF	DS	N	C
0CW2269P149//	572 203 1148	41- 31	AE	DJ	N	C
0CW2269P159//	572 203 1149	47- 10	AF	DS	N	C
0CW2269P160A/	572 505 0021	44- 4	AG	DX	N	C
0CW2269P171//	572 258 4087	42- 13	AL	EB	N	C
0CW2269P172//	572 258 4088	47- 11	AK	DX	N	C
0CW2269P176//	572 258 4090	45- 33	AE	DS	N	C
0CW2269P206//	572 290 2880	40- 29	AQ	EQ	N	C
0CW2269P207//	572 290 2881	43- 35	AF	DS	N	C
0CW2269P211//	572 290 2882	44- 28	AG	DX	N	C
0CW2269P221//	572 290 2883	47- 34	AH	DX	N	C
0CW2269P300//	572 287 2345	40- 23	AN	EQ	N	B
0CW2269P301//	572 287 2346	40- 14	AV	FG	N	B
0CW2269P303//	572 277 0119	44- 17	AY	FQ	N	C
0CW2269P304//	572 403 5197	43- 24	AD	DJ	N	C
0CW2269P305//	572 310 0360	44- 7	AQ	EQ	N	C
0CW2269P306//	572 310 0361	43- 2	AQ	EQ	N	C
0CW2269P307//	572 403 5198	44- 32	AN	EQ	N	C
0CW2269P308//	572 258 4092	43- 41	AD	DJ	N	C
0CW2269P309//	572 258 4093	44- 27	AC	DJ	N	C
0CW2269P311//	572 326 0498	41- 11	AG	DX	N	B
0CW2269P315//	572 258 4094	41- 41	AD	DJ	N	C
0CW2269P316//	572 316 0418	40- 28	AH	DX	N	C
0CW2269P318//	572 316 0419	40- 42	AH	DX	N	C
0CW2269P320//	572 326 0499	41- 10	AE	DS	N	B
0CW2269P324//	572 400 0806	41- 25	AE	DS	N	C
0CW2269P326//	572 287 2347	45- 27	AZ	FQ	N	C
0CW2269P327//	572 287 2348	45- 1	BA	FX	N	C
0CW2269P331//	572 310 0362	41- 39	AT	EZ	N	C
0CW2269P332//	572 310 0363	41- 35	AR	EQ	N	C

PARTS CODE	JAPAN ONLY ORDER CODE	NO.	PRICE R.		NEW	P/R
			Ex.	Ja.		
0CW2269P333//	572 287 2349	43- 19	BB	GD	N	B
0CW2269P334//	572 287 2350	41- 26	AY	FQ	N	B
0CW2269P335//	572 403 5199	44- 13	AD	DJ	N	C
0CW2269P336//	572 403 5200	43- 4	AG	DX	N	C
0CW2269P337//	572 403 5201	44- 31	AE	DJ	N	C
0CW2269P338//	572 403 5202	44- 11	AD	DJ	N	C
0CW2269P339//	572 326 0500	43- 47	AD	DJ	N	C
0CW2269P340//	572 403 5203	43- 28	AF	DS	N	C
0CW2269P341B/	572 403 5277	40- 21	AF	DS	N	C
0CW2269P343//	572 287 2351	45- 7	AZ	FQ	N	C
0CW2269P344D/	572 403 5316	40- 48	AG	DS	N	C
0CW2269P349B/	572 258 4191	41- 5	AD	DJ	N	C
0CW2269P350//	572 326 0501	40- 7	AD	DJ	N	C
0CW2269P351//	572 326 0502	44- 30	AC	DJ	N	C
0CW2269P354//	572 326 0503	43- 1	AL	EB	N	C
0CW2269P355A/	572 326 0516	40- 52	AH	DX	N	C
0CW2269P356A/	572 326 0517	40- 53	AF	DS	N	C
0CW2269P357//	572 287 2352	44- 29	AG	DX	N	C
0CW2269P358//	572 403 5206	43- 30	AD	DJ	N	C
0CW2269P359//	572 403 5207	43- 29	AN	EG	N	C
0CW2269P361//	572 399 0253	40- 15	AD	DJ	N	C
0CW2269P362//	572 326 0504	40- 5	AD	DJ	N	C
0CW2269P363//	572 258 4096	46- 5	AD	DJ	N	C
0CW2269P364//	572 326 0505	40- 10	AF	DS	N	C
0CW2269P365//	572 326 0506	39- 20	AV	FG	N	C
0CW2269P366//	572 326 0507	39- 21	AS	EQ	N	C
0CW2269P368//	572 326 0508	40- 4	AF	DS	N	C
〃	572 326 0508	44- 10	AF	DS	N	C
0CW2269P369//	572 326 0509	44- 9	AE	DS	N	C
0CW2269P381//	572 917 3675	39- 24	AL	EB	N	C
0CW2269P382//	572 326 0510	45- 26	AD	DJ	N	C
0CW2269P389//	572 326 0511	43- 50	AD	DJ	N	C
0CW2269P393A1	572 373 0146	47- 38	AG	DX	N	C
0CW2269P399A/	572 403 5266	44- 37	AE	DS	N	C
0CW2269P440//	572 647 0402	43- 51	AT	EZ	N	C
0CW2269P451A/	572 403 5267	41- 52	AF	DS	N	C
0CW2269P453A/	572 403 5268	41- 53	AE	DJ	N	C
0CW2269P455A/	572 403 5269	41- 54	AQ	EQ	N	C
0CW2269P459//	572 403 5317	40- 60	AG	DS	N	C
0CW2269P460//	572 403 5318	40- 61	AE	DS	N	C
0CW3085P334A/	572 970 2552	43- 20	AC	DJ	N	C
〃	572 970 2552	44- 34	AC	DJ	N	C
0CW4048P300A/	572 970 2553	44- 1	AC	DJ	N	C
0CW4054P143B1	572 970 2577	47- 16	AB	DJ	N	C
0CW4054P220D/	572 970 1731	39- 26	AB	DJ		C
〃	572 970 1731	46- 9	AB	DJ		C
0CW4062Q304B/	572 970 2555	43- 11	AC	DJ	N	C
0CW660580////	572 980 0091	39- 9	AA	DD		C
0CWE120001648	572 530 0715	42- 14	AP	EQ	N	B
〃	572 530 0715	47- 12	AP	EQ	N	B
0CWE314000619	572 568 0058	39- 8	AH	DX		B
〃	572 568 0058	41- 32	AH	DX		B
〃	572 568 0058	42- 2	AH	DX		B
〃	572 568 0058	43- 9	AH	DX		B
0CWE450000070	572 201 0104	47- 6	AB	DJ		C
0CWE450001128	572 201 0169	43- 8	AC	DJ		C
0CWE450001139	572 399 0252	43- 6	AC	DJ	N	C
〃	572 399 0252	47- 7	AC	DJ	N	C
0CWER040SKP//	572 399 0086	40- 33	AB	DD		C
〃	572 399 0086	44- 22	AB	DD		C
0CWER050SKP//	572 399 0089	40- 20	AA	DD		C
〃	572 399 0089	41- 17	AA	DD		C
〃	572 399 0089	42- 20	AA	DD		C
〃	572 399 0089	43- 18	AA	DD		C
〃	572 399 0089	46- 13	AA	DD		C
〃	572 399 0089	47- 32	AA	DD		C
0CWER070SKP//	572 399 0101	41- 20	AA	DD		C
〃	572 399 0101	42- 19	AA	DD		C
〃	572 399 0101	43- 38	AA	DD		C
〃	572 399 0101	45- 10	AA	DD		C
0CWHP02010SCH	572 218 0634	40- 26	AC	DJ	N	C
〃	572 218 0634	42- 26	AC	DJ	N	C
0CWNSBLT00056	572 271 0623	40- 24	AN	EG		C
0CWNSBLT00277	572 271 0834	42- 22	AP	EQ	N	C
0CWNSBLT00278	572 271 0862	44- 36	AL	EB	N	C
0CWNSBLT00281	572 271 0863	47- 41	AQ	EQ	N	C
0CWNSBLT00282	572 271 0864	47- 35	AR	EQ	N	C
0CWNSBRG00016	572 272 0626	42- 9	AT	EZ		C
〃	572 272 0626	47- 33	AT	EZ		C
0CWNSBRG00019	572 272 0806	41- 18	AQ	EQ	N	C
〃	572 272 0806	43- 15	AQ	EQ	N	C

PARTS CODE	JAPAN ONLY ORDER CODE	NO.	PRICE R.		NEW	P/R
			Ex.	Ja.		
0CWNSBRG00019	572 272 0806	45- 8	AQ	EQ	N	C
0CWPW080025//	572 256 0185	41- 40	AB	DJ	N	C
0FT23040224//	572 200 1334	57- 1	AD	DJ		C
0FT23042251//	572 397 0182	57- 2	AP	EQ		C
0FT23075095//	572 512 0394	57- 3	AP	EQ		C
0FT23095657//	572 576 0569	57- 96	AF	DS		B
〃	572 576 0569	57- 97	AF	DS		B
〃	572 576 0569	57- 98	AF	DS		B
〃	572 576 0569	57- 99	AF	DS		B
0FT23124819//	572 594 0890	57-100	AK	DX		C
0FT23124827//	572 594 0891	57-101	AF	DS		C
0FT23194310//	572 575 0159	57- 4	AU	EZ		B
0FT23204782//	572 594 0893	57-102	AP	EQ		C
0FT23204790//	572 594 0894	57-103	AP	EQ		C
〃	572 594 0894	57-104	AP	EQ		C
0FT23241823//	572 590 0053	57-105	AP	EQ		B
0FT23259382//	572 594 0895	57-106	AP	EQ		C
0FT23259420//	572 594 0896	57-107	AP	EQ		C
0FT23259447//	572 594 0897	57-108	AK	DX		C
0FT23259498//	572 594 0898	57-109	AK	DX		C
〃	572 594 0898	57-110	AK	DX		C
〃	572 594 0898	57-111	AK	DX		C
0FT23287629//	572 576 0570	57-112	AK	DX		B
0FT23287637//	572 576 0571	57-113	AP	EQ		B
0FT23287696//	572 576 0580	57-114	AP	EQ		B
0FT23287823//	572 594 0900	57-115	AK	DX		C
0FT23314081//	572 573 2389	57- 5	AU	EZ		B
0FT23319431//	572 570 0525	57-116	AF	DS		B
〃	572 570 0525	57-117	AF	DS		B
0FT23326101//	572 594 0901	57-118	AU	EZ		C
0FT23329089//	572 594 0902	57-119	AK	DX		C
〃	572 594 0902	57-120	AK	DX		C
0FT23379450//	572 573 2390	57-121	AU	EZ		B
〃	572 573 2390	57-122	AU	EZ		B
0FT23394395//	572 594 0903	57-123	AU	EZ		C
0FT23414892//	572 581 1976	57-124	AF	DS		C
0FT23415341//	572 581 1979	57-125	AF	DS		C
0FT23415430//	572 581 1982	57-126	AF	DS		C
0FT23415570//	572 581 1984	57-127	AF	DS		C
〃	572 581 1984	57-128	AF	DS		C
〃	572 581 1984	57-129	AF	DS		C
0FT23415600//	572 581 1985	57-130	AF	DS		C
0FT23415643//	572 581 1988	57-131	AF	DS		C
0FT23415651//	572 581 1989	57-132	AF	DS		C
0FT23415716//	572 581 1992	57-133	AF	DS		C
0FT23415740//	572 581 1994	57-134	AF	DS		C
0FT23415899//	572 581 1996	57-135	AF	DS		C
0FT23423816//	572 990 0439	57- 7	AC	DJ		C
0FT23429199//	572 570 0526	57-136	AK	DX		B
0FT23432963//	572 990 0440	57- 8	AC	DJ		C
0FT23462226//	572 581 1999	57- 33	AD	DJ		C
〃	572 581 1999	57- 34	AD	DJ		C
0FT23462234//	572 581 2001	57- 35	AD	DJ		C
〃	572 581 2001	57- 36	AD	DJ		C
〃	572 581 2001	57- 37	AD	DJ		C
〃	572 581 2001	57- 38	AD	DJ		C
0FT23462250//	572 581 2002	57- 39	AD	DJ		C
〃	572 581 2002	57- 40	AD	DJ		C
〃	572 581 2002	57- 41	AD	DJ		C
〃	572 581 2002	57- 42	AD	DJ		C
〃	572 581 2002	57- 43	AD	DJ		C
0FT23462269//	572 581 2003	57- 44	AD	DJ		C
〃	572 581 2003	57- 45	AD	DJ		C
〃	572 581 2003	57- 46	AD	DJ		C
0FT23462293//	572 581 2004	57- 47	AD	DJ		C
0FT23463362//	572 581 2005	57- 48	AD	DJ		C
0FT23484661//	572 581 2060	57-137	AD	DJ		C
0FT23485706//	572 512 0396	57- 9	AK	DX		C
0FT23486796//	572 594 0904	57-138	AK	DX		C
0FT23486850//	572 594 0905	57-139	AK	DX		C
〃	572 594 0905	57-140	AK	DX		C
0FT23536106//	572 581 2006	57- 49	AD	DJ		C
〃	572 581 2006	57- 50	AD	DJ		C
〃	572 581 2006	57- 51	AD	DJ		C
0FT23538850//	572 581 2009	57- 52	AD	DJ		C
〃	572 581 2009	57- 53	AD	DJ		C
0FT23538885//	572 581 2010	57- 54	AD	DJ		C
0FT23538915//	572 581 2011	57- 55	AD	DJ		C
0FT23538923//	572 581 2012	57- 56	AD	DJ		C
0FT23538974//	572 581 2013	57- 57	AD	DJ		C
0FT23538982//	572 581 2014	57- 58	AD	DJ		C

PARTS CODE	JAPAN ONLY ORDER CODE	NO.	PRICE R.		NEW	P/R
			Ex.	Ja.		
0FT23541509//	572 571 0254	57- 59	AK	DX		B
0FT23543641//	572 516 0055	57-141	AK	DX		C
0FT23546047//	572 581 2015	57- 60	AD	DJ		C
〃	572 581 2015	57- 61	AD	DJ		C
0FT23549119//	572 593 0340	57- 62	AF	DS		C
〃	572 593 0340	57- 63	AF	DS		C
〃	572 593 0340	57- 64	AF	DS		C
〃	572 593 0340	57- 65	AF	DS		C
〃	572 593 0340	57- 66	AF	DS		C
〃	572 593 0340	57- 67	AF	DS		C
〃	572 593 0340	57- 68	AF	DS		C
0FT23551148//	572 571 0255	57- 69	AK	DX		B
0FT23551377//	572 570 0527	57- 70	AK	DX		B
0FT23557111//	572 581 2016	57- 71	AD	DJ		C
0FT23559467//	572 576 0572	57- 10	AR	EQ		B
0FT23562328//	572 580 0996	57- 11	AD	DJ		C
0FT23562379//	572 580 1233	57- 12	AD	DJ		C
〃	572 580 1233	57- 13	AD	DJ		C
0FT23562549//	572 581 2017	57- 14	AD	DJ		C
0FT23562700//	572 581 2018	57- 15	AD	DJ		C
〃	572 581 2018	57- 16	AD	DJ		C
0FT23562727//	572 581 2019	57- 17	AD	DJ		C
0FT23562816//	572 580 1235	57- 18	AC	DJ		C
〃	572 580 1235	57- 19	AC	DJ		C
0FT23562859//	572 580 1236	57- 20	AD	DJ		C
0FT23563103//	572 581 2021	57- 21	AD	DJ		C
〃	572 581 2021	57- 22	AD	DJ		C
0FT23563324//	572 580 1020	57- 23	AC	DJ		C
〃	572 580 1020	57- 24	AC	DJ		C
0FT23565505//	572 581 2025	57- 72	AD	DJ		C
0FT23578194//	572 581 2026	57- 73	AD	DJ		C
〃	572 581 2026	57- 74	AD	DJ		C
0FT23581330//	572 593 0341	57- 75	AD	DJ		C
〃	572 593 0341	57- 76	AD	DJ		C
〃	572 593 0341	57- 77	AD	DJ		C
0FT23583309//	572 571 0256	57- 78	AG	DX		B
0FT23598470//	572 571 0257	57- 79	AG	DX		B
0FT23598977//	572 512 0397	57- 25	AK	DX		C
0FT23605507//	572 570 0528	57-142	AK	DX		B
〃	572 570 0528	57-143	AK	DX		B
〃	572 570 0528	57-144	AK	DX		B
〃	572 570 0528	57-145	AK	DX		B
0FT23610810//	572 570 0529	57-146	AK	DX		B
〃	572 570 0529	57-147	AK	DX		B
〃	572 570 0529	57-148	AK	DX		B
〃	572 570 0529	57-149	AK	DX		B
〃	572 570 0529	57-150	AK	DX		B
〃	572 570 0529	57-151	AK	DX		B
〃	572 570 0529	57-152	AK	DX		B
〃	572 570 0529	57-153	AK	DX		B
0FT23611329//	572 594 0643	57- 26	AK	DX		C
0FT23624285//	572 570 0540	57-154	AK	DX		B
0FT23624293//	572 581 2027	57- 80	AD	DJ		C
0FT23625591//	572 581 2028	57- 81	AD	DJ		C
〃	572 581 2028	57- 82	AD	DJ		C
0FT23642925//	572 614 0183	57- 27	AK	DX		B
0FT23644634//	572 670 0175	57- 28	AK	DX		B
0FT23663914//	572 581 2029	57- 83	AD	DJ		C
0FT23665429//	572 573 2391	57- 29	AU	EZ		B
0FT23671666//	572 573 2392	57- 30	AU	EZ		B
0FT23690482//	572 580 1255	57-155	AD	DJ		C
0FT23697355//	572 403 4281	57- 31	AU	EZ		B
0FT23736903//	572 570 0530	57- 32	AX	FG		B
0FT23752267//	572 580 1259	57-156	AD	DJ		C
〃	572 580 1259	57-157	AD	DJ		C
0FT33005385//	572 581 2035	57-158	AD	DJ		C
0FT33008015//	572 570 0531	57-168	AW	FG		B
0FT33035349//	572 570 0399	57-169	AK	DX		B
0FT33036442//	572 580 1262	57-159	AD	DJ		C
0FT33055277//	572 532 0211	57-160	AK	DX		C
0FT33085427//	572 576 0574	57-170	AU	EZ		B
0FT33122675//	572 570 0532	57- 84	AF	DS		B
〃	572 570 0532	57- 85	AF	DS		B
〃	572 570 0532	57- 86	AF	DS		B
〃	572 570 0532	57- 87	AF	DS		B
〃	572 570 0532	57- 88	AF	DS		B
〃	572 570 0532	57- 89	AF	DS		B
〃	572 570 0532	57- 90	AF	DS		B
〃	572 570 0532	57- 91	AF	DS		B
〃	572 570 0532	57- 92	AF	DS		B
〃	572 570 0532	57- 93	AF	DS		B

PARTS CODE	JAPAN ONLY ORDER CODE	NO.	PRICE R.		NEW	P/R
			Ex.	Ja.		
0FT33122675//	572 570 0532	57- 94	AF	DS		B
0FT33146922//	572 515 0507	57-171	AK	DX		A
0FT33173377//	572 614 0282	57-172	BA	FX		B
0FT33186711//	572 576 0575	57-161	AR	EQ		B
0FT33189184//	572 594 0911	57- 95	AD	DJ		C
0FT33197209//	572 574 0323	57-173	BA	FX		B
0FT33199031//	572 576 0576	57-174	AW	FG		B
0FT33213581//	572 397 0183	57-175	AP	EQ		C
0FT33213786//	572 593 0346	57-162	AK	DX		C
〃	572 593 0346	57-163	AK	DX		C
0FT33262132//	572 568 0129	57-176	AP	EQ		B
〃	572 568 0129	57-177	AP	EQ		B
0FT33293976//	572 594 0784	57-178	AF	DS		C
0FT33295049//	572 593 0347	57-164	AK	DX		C
0FT33331673//	572 573 2393	57-179	AZ	FQ		B
0FT33388799//	572 593 0348	57-165	AP	EQ		C
0FT33441622//	572 596 0393	57-180	AL	EB		C
0FT33441630//	572 593 0351	57-181	AP	EQ		C
0FT33478232//	572 594 0912	57-182	AZ	FQ		C
0FT33509685//	572 512 0400	57-183	AP	EQ		C
0FT33529090//	572 532 0212	57-184	AP	EQ		C
〃	572 532 0212	57-185	AP	EQ		C
〃	572 532 0212	57-186	AP	EQ		C
〃	572 532 0212	57-187	AP	EQ		C
0FT33552203//	572 581 2037	57-166	AD	DJ		C
0FT33568266//	572 637 0158	57-188	BA	FX		B
0FT33570120//	572 581 2038	57-167	AD	DJ		C
0FT33570163//	572 581 2039	57-189	AF	DS		C
〃	572 581 2039	57-190	AF	DS		C
0FT33603762//	572 573 2394	57-191	BB	GD		B
0FT33603789//	572 660 0436	57-192	BF	GN		B
0FT33638361//	572 637 0159	57-193	BC	GJ		B
〃	572 637 0159	57-194	BC	GJ		B
0FT35863281//	572 660 0437	57-195	BF	GN		B

注 意

・電池を正しく交換しないと爆発を起こす危険がある。

・機器製造者が指定したものと同一型名のもの、又は、
その同等の電池とのみ交換すること。

・使用済みの電池は、製造者の指示に従って処分すること。

CAUTION FOR BATTERY REPLACEMENT

(Danish) ADVARSEL !
Lithiumbatteri - Eksplosionsfare ved fejlagtig håndtering.
Udskiftning må kun ske med batteri
af samme fabrikat og type.
Levér det brugte batteri tilbage til leverandoren.

(English) Caution !
Danger of explosion if battery is incorrectly replaced.
Replace only with the same or equivalent type
recommended by the manufacturer.
Dispose of used batteries according to manufacturer's instructions.

(Finnish) VAROITUS
Paristo voi räjähtää,jos se on virheellisesti asennettu.
Vaihda paristo ainoastaan laitevalmistajan suosittelemaan
tyyppiin. Hävitä käytetty paristo valmistajan ohjeiden
mukaisesti.

(French) ATTENTION
Il y a danger d'explosion s'il y a remplacement incorrect
de la batterie. Remplacer uniquement avec une batterie du
même type on d'un type équivalent recommandé par
le constructeur.
Mettre au rébut les batteries usagées conformément aux
instructions du fabricant.

(Swedish) VARNING
Explosionsfara vid felaktigt batteribyte.
Använd samma batterityp eller en ekvivalent
typ som rekornmenderas av apparattillverkaren.
Kassera använt batteri enligt fabrikantens
Instruktion.

(German) Achtung
Explosionsgefahr bei Verwendung inkorrekter Batterien.
Als Ersatzbatterien dürfen nur Batterien vom gleichen Typ oder
vom Hersteller empfohlene Batterien verwendet werden.
Entsorgung der gebrauchten Batterien nur nach den vom
Hersteller angegebenen Anwerisugen.

CAUTION FOR BATTERY DISPOSAL

(For USA,CANADA)
Contains lithium-ion battery. Must be disposed of properly.
Remove the battery from the product and contact
federal or state environmental
agencies for information on recycling and disposal options.

SHARP

COPYRIGHT © 2003 BY SHARP CORPORATION

All rights reserved.
Printed in Japan.
No part of this publication may be reproduced,
stored in a retrieval system, or transmitted.
In any form or by any means,
electronic, mechanical, photocopying, recording, or otherwise,
without prior written permission of the publisher.

SHARP CORPORATION
Digital Document Systems Group
Products Quality Assurance Department
Yamatokoriyama, Nara 639-1186, Japan
2003 March Printed in Japan ⓣ